No. PF-41BA

TCM®

PARTS CATALOGUE

FORKLIFT TRUCK

DIESEL POWERED

FD10C12
FD10T12
FD15C12
FD15T12
FD18C12
FD18T12

TCM CORPORATION

ご使用のまえに

このパーツカタログは，TCM フォークリフトの構成部品を収録しています。

部品ご注文について

部品ご注文の際は，必ず車両の形式・仕様・製造番号（号車），部品番号および注文数を明示してください。車両の製造番号（号車）は車両銘板に表示しています。

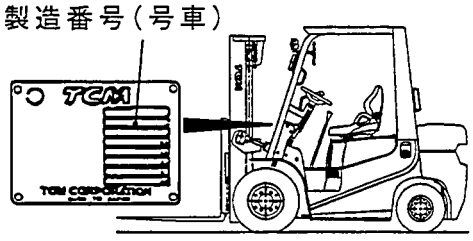

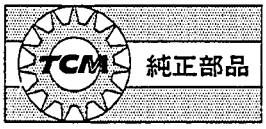

部品は，必ず「TCM 純正部品」をご使用ください。
純正部品以外の部品をご使用になり，故障が発生した場合は保証できません。

ご使用について

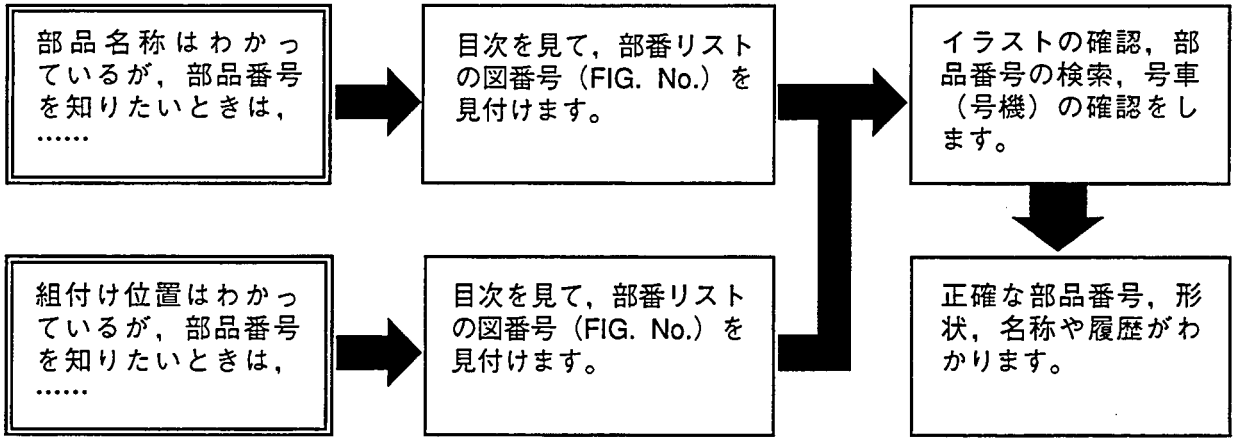

略語および記号

ＡＳＳＹ	組立品を示します。
ＲＨ	車両の前方向に向かって右側を示します。
ＬＨ	車両の前方向に向かって左側を示します。
ＡＲ	必要に応じた数を使用します。
＊	セットおよびキットの販売部品を示します。
Ｔ	厚みを示します。
＋	図示していません。
＃	単体販売しません。

部品は，品質向上のため予告なく変更することがありますので，あらかじめご了承ください。
詳細は，TCM 指定整備工場にご相談ください。

INTRODUCTION

This Parts Catalogue contains the component parts of the **TCM FORKLIFT TRUCK**.

How to order parts

When ordering, be sure to specify the model name, specification and serial number (machine number) of your machine, as well as the part number and desired quantity for each part. The machine serial number (machine number) is indicated on the machine name plate.

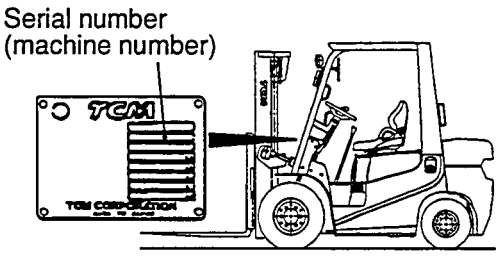

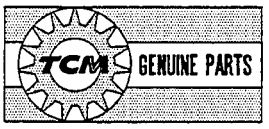

Always use "TCM's Genuine Parts". We cannot guarantee any loss or trouble attributable to other parts than ours.

How to use the Parts Catalogue

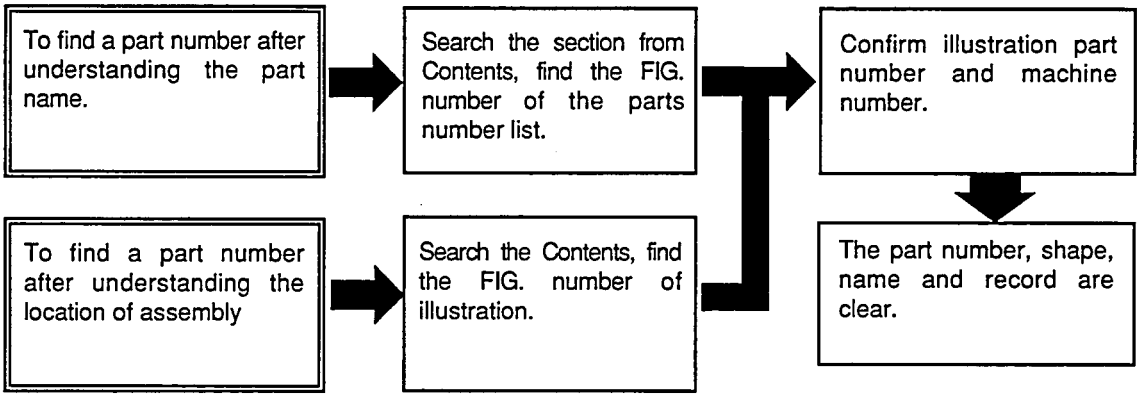

Abbreviations and symbols

ASSY ···	Assembled unit.
RH ·····	Right-hand when viewed forward on the truck.
LH ·····	Left-hand when viewed forward on the truck.
AR ·····	Quantity required.
* ·····	The marketable part set or kit.
T ·····	Thickness.
+ ·····	Not illustrated.
# ·····	Not sold separately.

Materals and specifications subject to change without notice.

CONTENTS 目次

CHASSIS シャーシ

a	FD10C12	c	FD15C12	e	FD18C12
b	FD10T12	d	FD15T12	f	FD18T12

SECTION 部門	a	b	c	d	e	f	FIG. NO.
ENGINE MOUNT ｴﾝｼﾞﾝﾏｳﾝﾄ	O	O	O	O	O	O	1
AIR CLEANER ｴｱｰｸﾘｰﾅ	O	O	O	O	O	O	2
AIR DUCT ｴｱｰﾀﾞｸﾄ	O	O	O	O	O	O	3
PRE CLEANER [CAKB] ﾌﾟﾚｸﾘｰﾅ	O	O	O	O	O	O	4
COOLING UNIT ｸｰﾘﾝｸﾞﾕﾆｯﾄ	O	O	O	O	O	O	5
RADIATOR PARTS & RESERVE TANK ﾗｼﾞｴｰﾀﾊﾟｰﾂ&ﾘｻﾞｰﾌﾞﾀﾝｸ	O	O	O	O	O	O	6
DUST SCREEN [DSR006][DSR008] ﾀﾞｽﾄｽｸﾘｰﾝ	O	O	O	O	O	O	7
FUEL SYSTEM ﾌｭｰｴﾙｼｽﾃﾑ	O	O	O	O	O	O	8
EXHAUST SYSTEM ｴｷｿﾞｰｽﾄｼｽﾃﾑ	O	O	O	O	O	O	9
POST & TAIL [TUE] ﾎﾟｽﾄ&ﾃｲﾙ	O	O	O	O	O	O	10
COMBINATION METER ｺﾝﾋﾞﾈｰｼｮﾝﾒｰﾀ	O	O	O	O	O	O	11
STEERING SHAFT COVER (CLUTCH) ｽﾃｱﾘﾝｸﾞｼｬﾌﾄｶﾊﾞｰ	O		O		O		12
STEERING SHAFT COVER (TOR-CON) ｽﾃｱﾘﾝｸﾞｼｬﾌﾄｶﾊﾞｰ		O		O		O	13
ELECTRIC PARTS ｴﾚｸﾄﾘｯｸﾊﾟｰﾂ	O	O	O	O	O	O	14
BATTERY ﾊﾞｯﾃﾘ	O	O	O	O	O	O	15
FRONT GUARD WIRE HARNESS (CLUTCH) ﾌﾛﾝﾄｶﾞｰﾄﾞﾜｲﾔﾊｰﾈｽ	O		O		O		16
FRONT GUARD WIRE HARNESS (TOR-CON) ﾌﾛﾝﾄｶﾞｰﾄﾞﾜｲﾔﾊｰﾈｽ		O		O		O	17
ENGINE WIRE HARNESS (CLUTCH) ｴﾝｼﾞﾝﾜｲﾔﾊｰﾈｽ	O		O		O		18
ENGINE WIRE HARNESS (TOR-CON) ｴﾝｼﾞﾝﾜｲﾔﾊｰﾈｽ		O		O		O	19
BACK BUZZER ﾊﾞｯｸﾌﾞｻﾞｰ	O	O	O	O	O	O	20
LIGHT UNIT ﾗｲﾄﾕﾆｯﾄ	O	O	O	O	O	O	21

CONTENTS 目次

CHASSIS シャーシ

a	FD10C12	c	FD15C12	e	FD18C12
b	FD10T12	d	FD15T12	f	FD18T12

SECTION 部門	a	b	c	d	e	f	FIG. NO.
LICENSE LIGHT ﾗｲｾﾝｽﾗｲﾄ	O	O	O	O	O	O	22
LICENSE LIGHT [TUE/RRE] ﾗｲｾﾝｽﾗｲﾄ	O	O	O	O	O	O	23
REAR WORKING LIGHT [RWLR] ﾘﾔｰﾜｰｷﾝｸﾞﾗｲﾄ	O	O	O	O	O	O	24
REAR WORKING LIGHT [RWLL] ﾘﾔｰﾜｰｷﾝｸﾞﾗｲﾄ	O	O	O	O	O	O	25
REAR WORKING LIGHT [RWL2] ﾘﾔｰﾜｰｷﾝｸﾞﾗｲﾄ	O	O	O	O	O	O	26
REVOLVING LIGHT [RLY][RLR] ﾘﾎﾞﾙﾋﾞﾝｸﾞﾗｲﾄ	O	O	O	O	O	O	27
SPOT LIGHT [SPL] ｽﾎﾟｯﾄﾗｲﾄ	O	O	O	O	O	O	28
HEATER UNIT [HR] ﾋｰﾀﾕﾆｯﾄ	O	O	O	O	O	O	29
HEATER VALVE & ELBOW [HR] ﾋｰﾀﾊﾞﾙﾌﾞ&ｴﾙﾎﾞ	O	O	O	O	O	O	30
FAN [FAN] ﾌｧﾝ	O	O	O	O	O	O	31
AMMETER [AM] ｱﾝﾒｰﾀ	O	O	O	O	O	O	32
SPEED METER [SM] ｽﾋﾟｰﾄﾞﾒｰﾀ	O	O	O	O	O	O	33
TORQUE CONVERTER THERMOMETER [TTM] ﾄﾙｸｺﾝﾊﾞｰﾀｻｰﾓﾒｰﾀ		O		O		O	34
TORQUE CONVERTER PRESSURE METER [TPM] ﾄﾙｸｺﾝﾊﾞｰﾀﾌﾟﾚｯｼｬﾒｰﾀ		O		O		O	35
SPEED DETECTOR UNIT [SAS] ｽﾋﾟｰﾄﾞﾃﾞｨﾃｸﾀﾕﾆｯﾄ	O	O	O	O	O	O	36
SPEED ALARM SYSTEM [SASB] ｽﾋﾟｰﾄﾞｱﾗｰﾑｼｽﾃﾑ	O	O	O	O	O	O	37
SPEED ALARM SYSTEM [SASR] ｽﾋﾟｰﾄﾞｱﾗｰﾑｼｽﾃﾑ	O	O	O	O	O	O	38
SPEED ALARM SYSTEM [SASC] ｽﾋﾟｰﾄﾞｱﾗｰﾑｼｽﾃﾑ	O	O	O	O	O	O	39
OK MONITOR [OKM] OKﾓﾆﾀ	O	O	O	O	O	O	40
DRIVE UNIT MOUNT (CLUTCH) ﾄﾞﾗｲﾌﾞﾕﾆｯﾄﾏｳﾝﾄ	O		O		O		41
CLUTCH (CLUTCH) ｸﾗｯﾁ	O		O		O		42

CONTENTS 目次

CHASSIS シャーシ

a	FD10C12	c	FD15C12	e	FD18C12
b	FD10T12	d	FD15T12	f	FD18T12

SECTION 部門	a	b	c	d	e	f	FIG. NO.
MISSION CASE (CLUTCH) ミッションケース	○		○		○		43
MISSION GEAR (CLUTCH) ミッションギヤー	○		○		○		44
DRIVE UNIT MOUNT (TOR-CON) ドライブユニットマウント		○		○		○	45
TORQUE CONVERTER CASE (TOR-CON) トルクコンバータケース		○		○		○	46
CHARGING PUMP (TOR-CON) チャージングポンプ		○		○		○	47
MISSION CASE (TOR-CON) ミッションケース		○		○		○	48
CLUTCH PACK (TOR-CON) クラッチパック		○		○		○	49
CONTROL VALVE (TOR-CON) コントロールバルブ		○		○		○	50
INCHING VALVE (TOR-CON) インチングバルブ		○		○		○	51
REDUCTION リダクション	○	○	○	○	○	○	52
DIFFERENTIAL ディファレンシャル	○	○	○	○	○	○	53
DRIVE AXLE ドライブアクスル	○	○	○	○	○	○	54
WHEEL BRAKE ホイールブレーキ	○	○	○	○	○	○	55
STEERING WHEEL UNIT ステアリングホイールユニット	○	○	○	○	○	○	56
STEERING WHEEL UNIT (TOR-CON):[EXN] ステアリングホイールユニット		○		○		○	57
GEAR BOX ギヤーボックス	○	○	○	○	○	○	58
GEAR BOX [(EXC,EXE,EXK,EXN)/PSS] ギヤーボックス	○	○	○	○	○	○	59
ORBITROL [EXC][EXE][EXK][EXN][OBT] オービットロール	○	○	○	○	○	○	60
DRAG LINK ドラッグリンク	○	○	○	○	○	○	61
STEERING AXLE ステアリングアクスル	○	○	○	○	○	○	62
STEERING AXLE [EXC][EXE][EXK][EXN][OBT] ステアリングアクスル	○	○	○	○	○	○	63

CONTENTS 目次

CHASSIS シャーシ

a	FD10C12	c	FD15C12	e	FD18C12
b	FD10T12	d	FD15T12	f	FD18T12

SECTION 部門	a	b	c	d	e	f	FIG. NO.
STEERING AXLE [(EXC,EXE,EXK,EXN)/PSS] ステアリングアクスル	O	O	O	O	O	O	64
AXLE SUPPORT アクスルサポート	O	O	O	O	O	O	65
HUB NUT ハブナット	O	O	O	O	O	O	66
FRONT WHEEL (1.0T,1.5T) フロントホイール	O	O	O	O			67
FRONT WHEEL (1.8T) フロントホイール					O	O	68
FRONT WHEEL (1.0T,1.5T):[DR F] フロントホイール	O	O	O	O			69
FRONT WHEEL (1.0T,1.5T):[TJ F][TJSF][T F][TS F] フロントホイール	O	O	O	O			70
FRONT WHEEL (1.8T):[TJ F][TJSF][T F][TS F] フロントホイール					O	O	71
FRONT WHEEL (1.0T,1.5T):[(TJ F,TJSF,T F,TS F)/DR F] フロントホイール	O	O	O	O			72
FRONT WHEEL (1.0T,1.5T):[TUJF][TUSF][TUWF][TUGF] フロントホイール	O	O	O	O			73
FRONT WHEEL (1.8T):[TUJF][TUSF][TUWF][TUGF] フロントホイール					O	O	74
FRONT WHEEL (1.0T,1.5T):[TUJF/DR F] フロントホイール	O	O	O	O			75
FRONT WHEEL (1.0T,1.5T):[TRAF] フロントホイール	O	O	O	O			76
FRONT WHEEL (1.8T):[TRAF] フロントホイール					O	O	77
FRONT WHEEL [TJ W][T W][TS W] フロントホイール	O	O	O	O	O	O	78
FRONT WHEEL [TUJW][TUSW][TUWW][TUGW] フロントホイール	O	O	O	O	O	O	79
FRONT WHEEL [TJ W65][TJSW65][T W65][TS W65] フロントホイール	O	O	O	O	O	O	80
FRONT WHEEL [TUJW65][TUSW65][TUWW65][TUGW65] フロントホイール	O	O	O	O	O	O	81
REAR WHEEL リヤーホイール	O	O	O	O	O	O	82
REAR WHEEL [DR R] リヤーホイール	O	O	O	O	O	O	83
REAR WHEEL [TJ R][TJSR][T R][TS R] リヤーホイール	O	O	O	O	O	O	84

CONTENTS 目次

CHASSIS シャーシ

a	FD10C12	c	FD15C12	e	FD18C12
b	FD10T12	d	FD15T12	f	FD18T12

SECTION 部門	a	b	c	d	e	f	FIG. NO.
REAR WHEEL [(TJ R,TJSR,T R,TS R)/DR R] リヤーホイール	○	○	○	○	○	○	85
REAR WHEEL [TUJR][TUSR][TUWR][TUGR] リヤーホイール	○	○	○	○	○	○	86
REAR WHEEL [TUJR/DR R] リヤーホイール	○	○	○	○	○	○	87
REAR WHEEL [TRAR] リヤーホイール	○	○	○	○	○	○	88
FENDER [DD][SDD] フェンダ゛	○	○	○	○	○	○	89
POWER CYLINDER パ゜ワーシリンダ゛	○	○	○	○	○	○	90
POWER CYLINDER [EXC][EXE][EXK][EXN][OBT] パ゜ワーシリンダ゛	○	○	○	○	○	○	91
POWER CYLINDER [(EXC,EXE,EXK,EXN)/PSS] パ゜ワーシリンダ゛	○	○	○	○	○	○	92
POWER CYLINDER BOOT [PSB][FC][RINFC] パ゜ワーシリンダ゛ブ゛ーツ	○	○	○	○	○	○	93
OVERHEAD GUARD オーバ゛ヘッド゛カ゛ード゛	○	○	○	○	○	○	94
OVERHEAD GUARD [EXB][EXC][EXE][EXK][EXN] オーバ゛ヘッド゛カ゛ード゛	○	○	○	○	○	○	95
FRONT PIPE フロントパ゜イプ゛	○	○	○	○	○	○	96
REAR PIPE リヤーパ゜イプ゛	○	○	○	○	○	○	97
REAR PIPE [EXB][EXC][EXE][EXK][EXN] リヤーパ゜イプ゛	○	○	○	○	○	○	98
FRONT LAMP BRACKET フロントランプ゛ブ゛ラケット	○	○	○	○	○	○	99
FRONT LAMP BRACKET [HL][BKH] フロントランプ゛ブ゛ラケット	○	○	○	○	○	○	100
REAR LAMP BRACKET リヤーランプ゛ブ゛ラケット	○	○	○	○	○	○	101
HEAD GUARD PARTS ヘッド゛カ゛ード゛パ゜ーツ	○	○	○	○	○	○	102
ACCEL PEDAL アクセルペ゛ダル	○	○	○	○	○	○	103
FOOT PEDAL (CLUTCH) フットペ゛ダル	○		○		○		104
FOOT PEDAL (CLUTCH):[PC] フットペ゛ダル	○		○		○		105

CONTENTS 目次

CHASSIS シャーシ

a	FD10C12	c	FD15C12	e	FD18C12
b	FD10T12	d	FD15T12	f	FD18T12

SECTION 部門	a	b	c	d	e	f	FIG. NO.
FOOT PEDAL (TOR-CON) ﾌｯﾄﾍﾟﾀﾞﾙ		O		O		O	106
FOOT PEDAL CYLINDER (CLUTCH) ﾌｯﾄﾍﾟﾀﾞﾙｼﾘﾝﾀﾞ	O		O		O		107
FOOT PEDAL CYLINDER (CLUTCH):[PC] ﾌｯﾄﾍﾟﾀﾞﾙｼﾘﾝﾀﾞ	O		O		O		108
FOOT PEDAL CYLINDER (TOR-CON) ﾌｯﾄﾍﾟﾀﾞﾙｼﾘﾝﾀﾞ		O		O		O	109
BRAKE PIPE (CLUTCH) ﾌﾞﾚｰｷﾊﾟｲﾌﾟ	O		O		O		110
BRAKE PIPE (CLUTCH):[PC] ﾌﾞﾚｰｷﾊﾟｲﾌﾟ	O		O		O		111
BRAKE PIPE (TOR-CON) ﾌﾞﾚｰｷﾊﾟｲﾌﾟ		O		O		O	112
FOOT PEDAL COVER ﾌｯﾄﾍﾟﾀﾞﾙｶﾊﾞｰ	O	O	O	O	O	O	113
BRAKE MASTER CYLINDER ﾌﾞﾚｰｷﾏｽﾀｼﾘﾝﾀﾞ	O	O	O	O	O	O	114
BRAKE LEVER ﾌﾞﾚｰｷﾚﾊﾞｰ	O	O	O	O	O	O	115
FRAME ﾌﾚｰﾑ	O	O	O	O	O	O	116
OIL TANK ｵｲﾙﾀﾝｸ	O	O	O	O	O	O	117
OIL CAP & LEVEL ｵｲﾙｷｬｯﾌﾟ&ﾚﾍﾞﾙ	O	O	O	O	O	O	118
FUEL TANK ﾌｭｰｴﾙﾀﾝｸ	O	O	O	O	O	O	119
BALANCE WEIGHT ﾊﾞﾗﾝｽｳｴｲﾄ	O	O	O	O	O	O	120
BALANCE WEIGHT [HC] ﾊﾞﾗﾝｽｳｴｲﾄ	O	O	O	O	O	O	121
FRONT GUARD ﾌﾛﾝﾄｶﾞｰﾄﾞ	O	O	O	O	O	O	122
BONNET ﾎﾞﾝﾈｯﾄ	O	O	O	O	O	O	123
RADIATOR COVER ﾗｼﾞｴｰﾀｶﾊﾞｰ	O	O	O	O	O	O	124
FLOOR BOARD ﾌﾛｱﾎﾞｰﾄﾞ	O	O	O	O	O	O	125
TRAY ﾄﾚｰ	O	O	O	O	O	O	126

CONTENTS 目次

CHASSIS シャーシ

a	FD10C12	c	FD15C12	e	FD18C12
b	FD10T12	d	FD15T12	f	FD18T12

SECTION 部門	a	b	c	d	e	f	FIG. NO.
TRAY [AW071][RWL][LPG][LPO][BB SW][BBASW] トレー	○	○	○	○	○	○	127
TRAY [SM][AM][TPM] トレー	○	○	○	○	○	○	128
TRAY [SM/(BB SW,BBASW)][SM/(BB SW,BBASW)/RWL] トレー	○	○	○	○	○	○	129
TRAY [SM/AW071/RWL] トレー	○	○	○	○	○	○	130
FRONT GUARD BOOT [FC] フロントガードブーツ	○	○	○	○	○	○	131
SEAT シート	○	○	○	○	○	○	132
SEAT [EX][SUS001] シート	○	○	○	○	○	○	133
SEAT [SETD/SEB/EX] シート	○	○	○	○	○	○	134
PUMP UNIT ポンプユニット	○	○	○	○	○	○	135
CONTROL VALVE [2SV] コントロールバルブ	○	○	○	○	○	○	136
CONTROL VALVE [3SV] コントロールバルブ	○	○	○	○	○	○	137
CONTROL VALVE [4SV] コントロールバルブ	○	○	○	○	○	○	138
CONTROL VALVE [5SV] コントロールバルブ	○	○	○	○	○	○	139
INLET SECTION インレットセクション	○	○	○	○	○	○	140
SPOOL SECTION (LIFT) スプールセクション	○	○	○	○	○	○	141
SPOOL SECTION (TILT) スプールセクション	○	○	○	○	○	○	142
SPOOL SECTION [3SV][4SV][5SV] スプールセクション	○	○	○	○	○	○	143
CONTROL VALVE FITTING コントロールバルブフィッティング	○	○	○	○	○	○	144
VALVE CONTROL [2SV] バルブコントロール	○	○	○	○	○	○	145
VALVE CONTROL [3SV] バルブコントロール	○	○	○	○	○	○	146
VALVE CONTROL [4SV] バルブコントロール	○	○	○	○	○	○	147

CONTENTS 目次

CHASSIS シャーシ

a	FD10C12	c	FD15C12	e	FD18C12
b	FD10T12	d	FD15T12	f	FD18T12

SECTION 部門	a	b	c	d	e	f	FIG. NO.
VALVE CONTROL [5SV] ﾊﾞﾙﾌﾞｺﾝﾄﾛｰﾙ	O	O	O	O	O	O	148
VALVE CONTROL KNOB ﾊﾞﾙﾌﾞｺﾝﾄﾛｰﾙﾉﾌﾞ	O	O	O	O	O	O	149
HYDRAULIC LINE (MAIN) (1/3) ﾊｲﾄﾞﾛﾘｯｸﾗｲﾝ(1/3)	O	O	O	O	O	O	150
HYDRAULIC LINE (MAIN) (2/3) ﾊｲﾄﾞﾛﾘｯｸﾗｲﾝ(2/3)	O	O	O	O	O	O	151
HYDRAULIC LINE (MAIN) (2/3) [EXC][EXE][EXK][EXN][OBT] ﾊｲﾄﾞﾛﾘｯｸﾗｲﾝ(2/3)	O	O	O	O	O	O	152
HYDRAULIC LINE (MAIN) (2/3) [(EXC,EXE,EXK,EXN)/PSS] ﾊｲﾄﾞﾛﾘｯｸﾗｲﾝ(2/3)	O	O	O	O	O	O	153
HYDRAULIC LINE (MAIN) (3/3) ﾊｲﾄﾞﾛﾘｯｸﾗｲﾝ(3/3)	O	O	O	O	O	O	154
HYDRAULIC LINE (TOR-CON) ﾊｲﾄﾞﾛﾘｯｸﾗｲﾝ(ﾄﾙｺﾝ)		O		O		O	155
TILT CYLINDER ﾃｨﾙﾄｼﾘﾝﾀﾞ	O	O	O	O	O	O	156
TILT BOOT [TLB][FC] ﾃｨﾙﾄﾌﾞｰﾂ	O	O	O	O	O	O	157
DECAL (1/2) ﾃﾞｶﾙ(1/2)	O	O	O	O	O	O	158
DECAL (2/2) ﾃﾞｶﾙ(2/2)	O	O	O	O	O	O	159
DECAL (2/2) [EXB] ﾃﾞｶﾙ(2/2)	O	O	O	O	O	O	160
DECAL (2/2) [EXC] ﾃﾞｶﾙ(2/2)	O	O	O	O	O	O	161
DECAL (2/2) [EXE] ﾃﾞｶﾙ(2/2)	O	O	O	O	O	O	162
DECAL (2/2) [EXK] ﾃﾞｶﾙ(2/2)	O	O	O	O	O	O	163
DECAL (2/2) [EXN] ﾃﾞｶﾙ(2/2)	O	O	O	O	O	O	164
SERVICE TOOL [TO][EX] ｻｰﾋﾞｽﾂｰﾙ	O	O	O	O	O	O	165
FRONT GLASS [AW071] ﾌﾛﾝﾄｶﾞﾗｽ	O	O	O	O	O	O	166
FRONT GLASS WIPER [AW071] ﾌﾛﾝﾄｶﾞﾗｽ	O	O	O	O	O	O	167
FIRE EXTINGUISHER [FE][FE M] ﾌｧｲﾔｲｸｽﾃｨﾝｸﾞｲｯｼｬ	O	O	O	O	O	O	168

CONTENTS 目次

MAST マスト

a	FD10C12	c	FD15C12	e	FD18C12
b	FD10T12	d	FD15T12	f	FD18T12

SECTION 部門	a	b	c	d	e	f	FIG. NO.
[VM18G]							
FORK [VM18G] フォーク	○	○	○	○			169
LIFT BRACKET [VM18G] リフトブラケット	○	○	○	○			170
BACKREST [VM18G] バックレスト	○	○	○	○			171
MAST [VM18G] マスト	○	○	○	○			172
LIFT CYLINDER [VM18G] リフトシリンダ	○	○	○	○			173
MAST PIPING [VM18G] マストパイピング	○	○	○	○			174
[VM18J]							
FORK [VM18J] フォーク					○	○	175
LIFT BRACKET [VM18J] リフトブラケット					○	○	176
BACKREST [VM18J] バックレスト					○	○	177
MAST [VM18J] マスト					○	○	178
LIFT CYLINDER [VM18J] リフトシリンダ					○	○	179
MAST PIPING [VM18J] マストパイピング					○	○	180

CONTENTS 目次

MAST マスト

a	FD10C12	c	FD15C12	e	FD18C12
b	FD10T12	d	FD15T12	f	FD18T12

SECTION 部門	a	b	c	d	e	f	FIG. NO.
[VFM18G]							
FORK [VFM18G] フォーク	○	○	○	○	○	○	181
LIFT BRACKET [VFM18G] リフトブラケット	○	○	○	○	○	○	182
BACKREST [VFM18G] バックレスト	○	○	○	○	○	○	183
MAST [VFM18G] マスト	○	○	○	○	○	○	184
LIFT CYLINDER(FRONT) [VFM18G] リフトシリンダ(フロント)	○	○	○	○	○	○	185
LIFT CYLINDER(REAR) [VFM18G] リフトシリンダ(リヤー)	○	○	○	○	○	○	186
MAST PIPING [VFM18G] マストパイピング	○	○	○	○	○	○	187
[VFHM18G]							
FORK [VFHM18G] フォーク	○	○	○	○	○	○	188
LIFT BRACKET [VFHM18G] リフトブラケット	○	○	○	○	○	○	189
BACKREST [VFHM18G] バックレスト	○	○	○	○	○	○	190
MAST [VFHM18G] マスト	○	○	○	○	○	○	191
TILT GAUGE [TG/VFHM18G] ティルトゲージ	○	○	○	○	○	○	192
LIFT CYLINDER(FRONT) [VFHM18G] リフトシリンダ(フロント)	○	○	○	○	○	○	193
LIFT CYLINDER (REAR) [VFHM18G] リフトシリンダ(リヤー)	○	○	○	○	○	○	194
MAST PIPING [VFHM18G] マストパイピング	○	○	○	○	○	○	195

FIG.1 ENGINE MOUNT
(F6011020) エンジンマウント

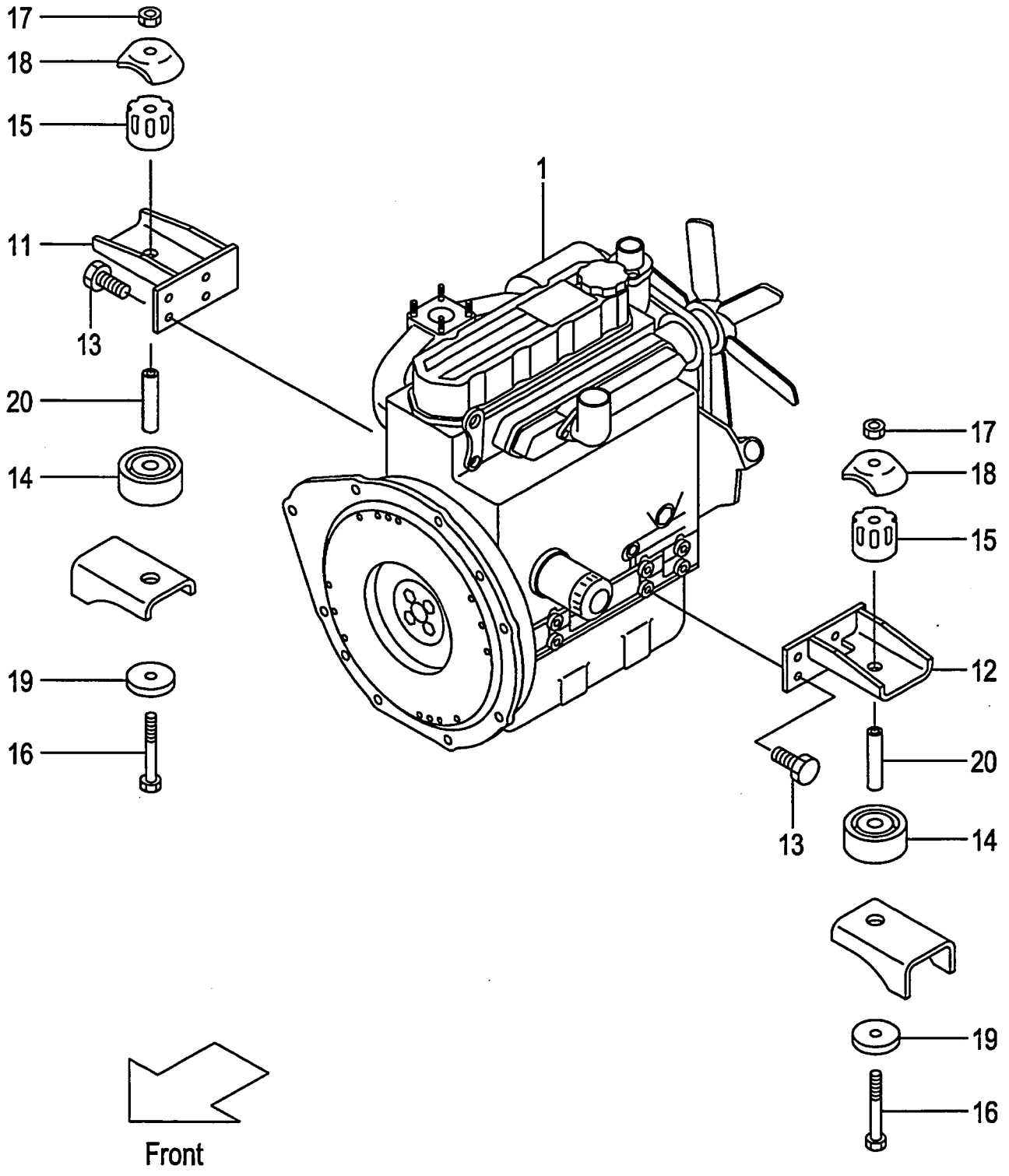

FIG.1
(F6011020)

A:FD10C12 FD10T12 FD15C12 FD15T12 FD18C12 FD18T12

Item No	Part No.	Mark	Description		Req'd	Remarks : Serial No.
1	241G1-00101		ENGINE,S4L	ｴﾝｼﾞﾝ	1	
2	01400-00008	+	NUT	ﾅｯﾄ	1	
3	02010-00008	+	WASHER	ﾜｯｼｬ	1	
4	02000-00008	+	WASHER	ﾜｯｼｬ	1	
5	01400-00006	+	NUT	ﾅｯﾄ	1	
6	02010-00006	+	WASHER	ﾜｯｼｬ	1	
7	02000-00006	+	WASHER	ﾜｯｼｬ	1	
8	01100-05010	+	BOLT	ﾎﾞﾙﾄ	1	
9	02010-00005	+	WASHER	ﾜｯｼｬ	1	
10	01185-06012	+	BOLT	ﾎﾞﾙﾄ	2	
11	241G1-02101		BRACKET,RH	ﾌﾞﾗｹｯﾄ	1	
12	241G1-02201		BRACKET,LH	ﾌﾞﾗｹｯﾄ	1	
13	01219-12030		BOLT	ﾎﾞﾙﾄ	8	
14	216G1-02111		RUBBER,CUSHION	ﾗﾊﾞｰ	2	
15	214A1-02111		RUBBER,CUSHION	ﾗﾊﾞｰ	2	
16	01103-10097		BOLT	ﾎﾞﾙﾄ	2	
17	23651-02011		NUT	ﾅｯﾄ	2	
18	214A1-02121		CAP	ｷｬｯﾌﾟ	2	
19	23651-02001		PLATE	ﾌﾟﾚｰﾄ	2	
20	234A1-02071		COLLAR	ｶﾗｰ	2	

FIG.2 AIR CLEANER
(F6011040) エアークリーナ

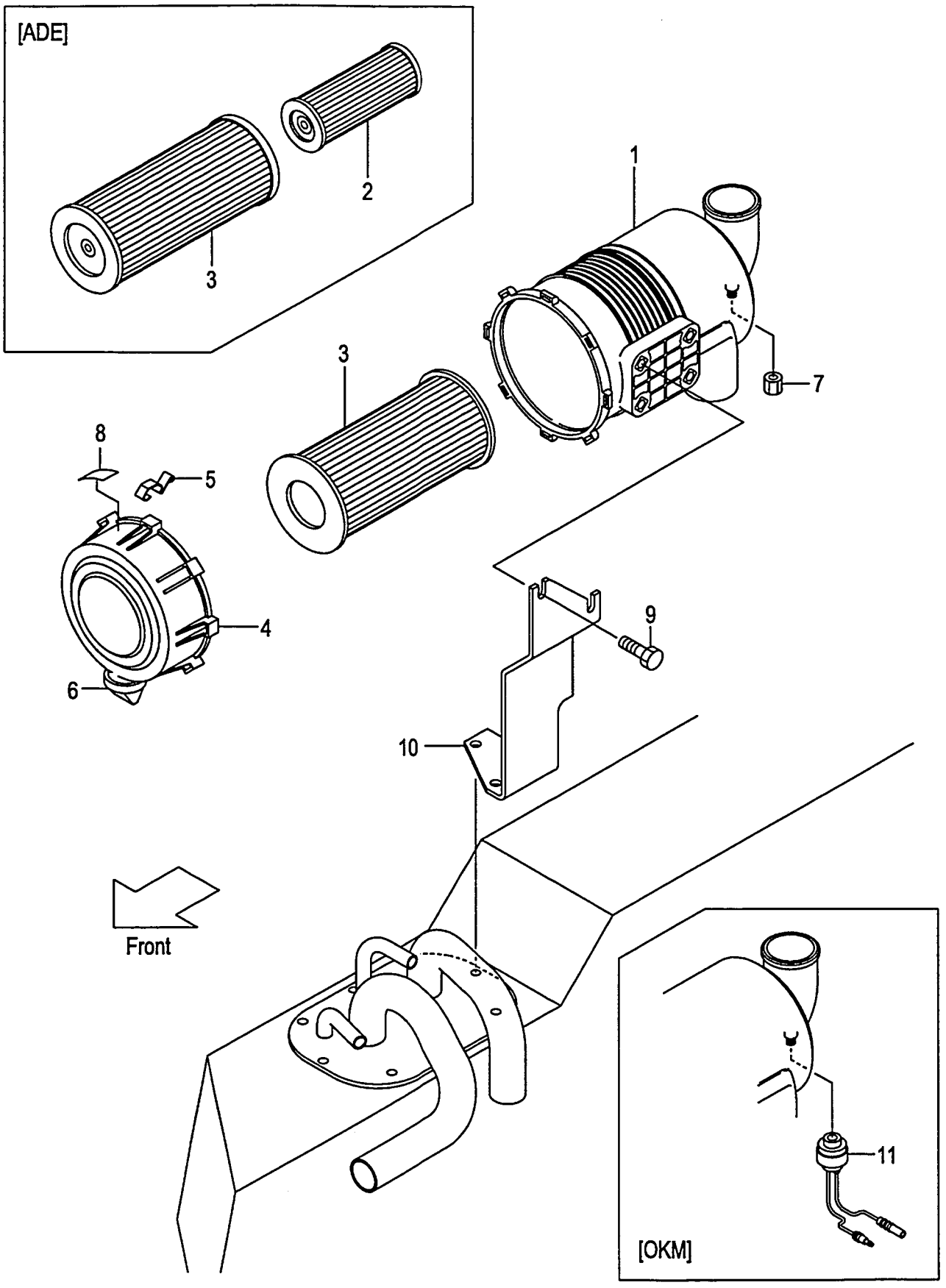

A:FD10C12 FD15C12 FD18C12
B:FD10T12 FD15T12 FD18T12

FIG.2
(F6011040)

Item No	Part No.	Mark	Description		Req'd	Remarks : Serial No.
A1	216G1-02451		CLEANER-ASSY,AIR	ｴｱｰｸﾘｰﾅｱｯｾﾝ	1	INC.1,3-8
-	516G0-60101		CLEANER-ASSY,AIR	ｴｱｰｸﾘｰﾅｱｯｾﾝ	1	[ADE] INC.1-8
1	216G1-02481		BODY	ﾎﾞﾃﾞｨ	1	
2	213T1-02021		ELEMENT,INNER	ｴﾚﾒﾝﾄ	1	[ADE]
3	256C1-08011		ELEMENT,OUTER	ｴﾚﾒﾝﾄ	1	
-	213T1-02011		ELEMENT,OUTER	ｴﾚﾒﾝﾄ	1	[ADE]
4	216G1-02461		COVER	ｶﾊﾞｰ	1	
5	216G1-02471		LATCH	ﾗｯﾁ	3	
6	216G1-02491		VALVE,VACUATOR	ﾊﾞﾙﾌﾞ	1	
7	53651-12551		CAP,NIPPLE	ｷｬｯﾌﾟ	1	
8	216G1-02501		LABEL	ﾗﾍﾞﾙ	1	
-	516G0-62011		LABEL	ﾗﾍﾞﾙ	1	[ADE]
9	01183-08016		BOLT	ﾎﾞﾙﾄ	2	
10	237A1-02101		BRACKET,AIR-CLEANER	ﾌﾞﾗｹｯﾄ	1	
-	237H1-02001		BRACKET,AIR-CLEANER	ﾌﾞﾗｹｯﾄ	1	A [PC]
11	54612-42021		INDICATOR	ｲﾝｼﾞｹｰﾀ	1	[OKM]

FIG.3 AIR DUCT
(F6011060) エアーダクト

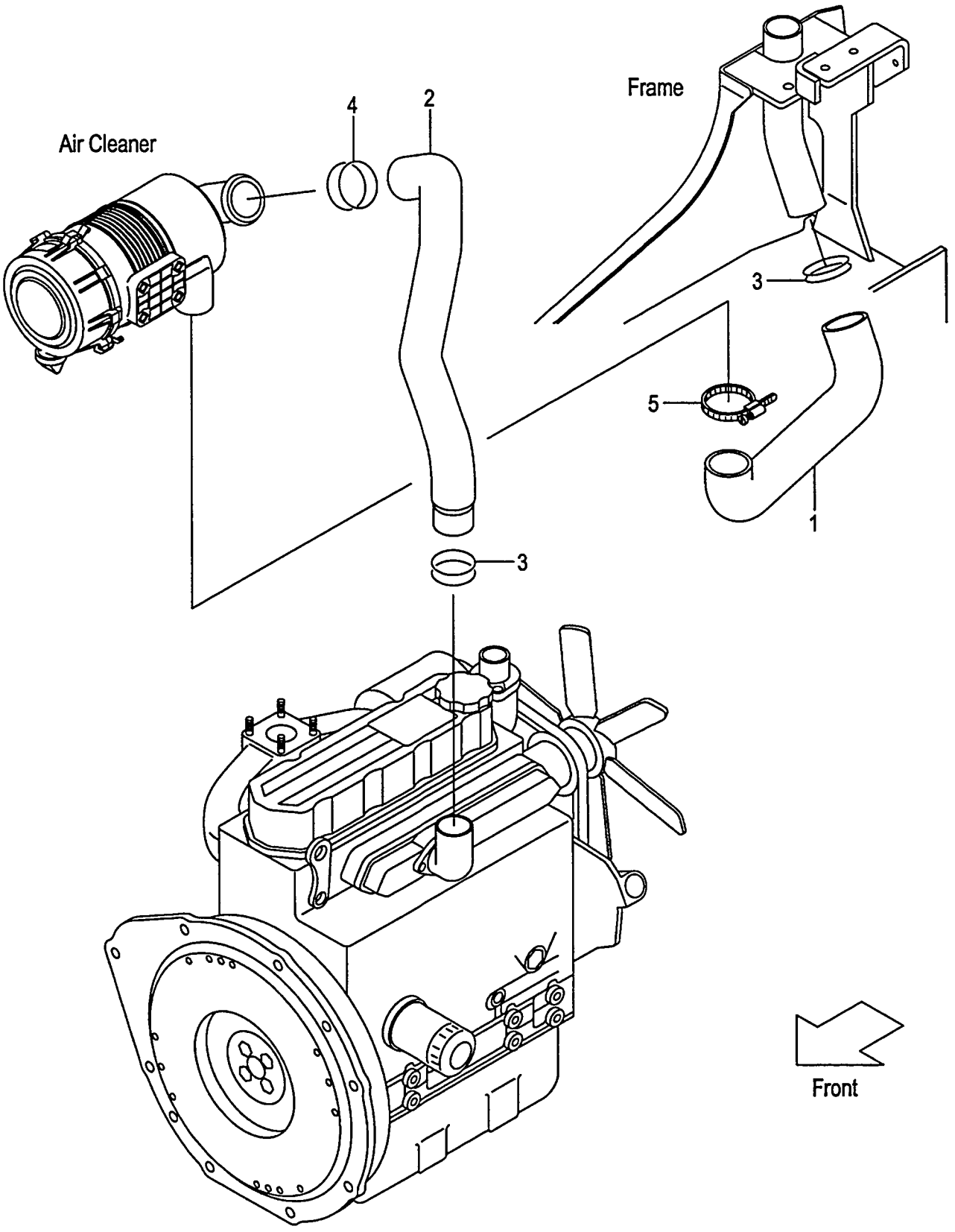

FIG.3
(F6011060)

A:FD10C12 FD10T12 FD15C12 FD15T12 FD18C12 FD18T12

Item No	Part No.	Mark	Description		Req'd	Remarks : Serial No.
1	218G1-02101		HOSE,AIR-DUCT	ﾎｰｽ	1	
2	241G1-02001		HOSE,AIR-INTAKE	ﾎｰｽ	1	
3	04911-00060		CLIP	ｸﾘｯﾌﾟ	2	
4	04911-00065		CLIP	ｸﾘｯﾌﾟ	1	
5	224W4-52071		BAND	ﾊﾞﾝﾄﾞ	1	

FIG.4 PRE CLEANER [CAKB]

(F6011070) ﾌﾟﾚｸﾘｰﾅ

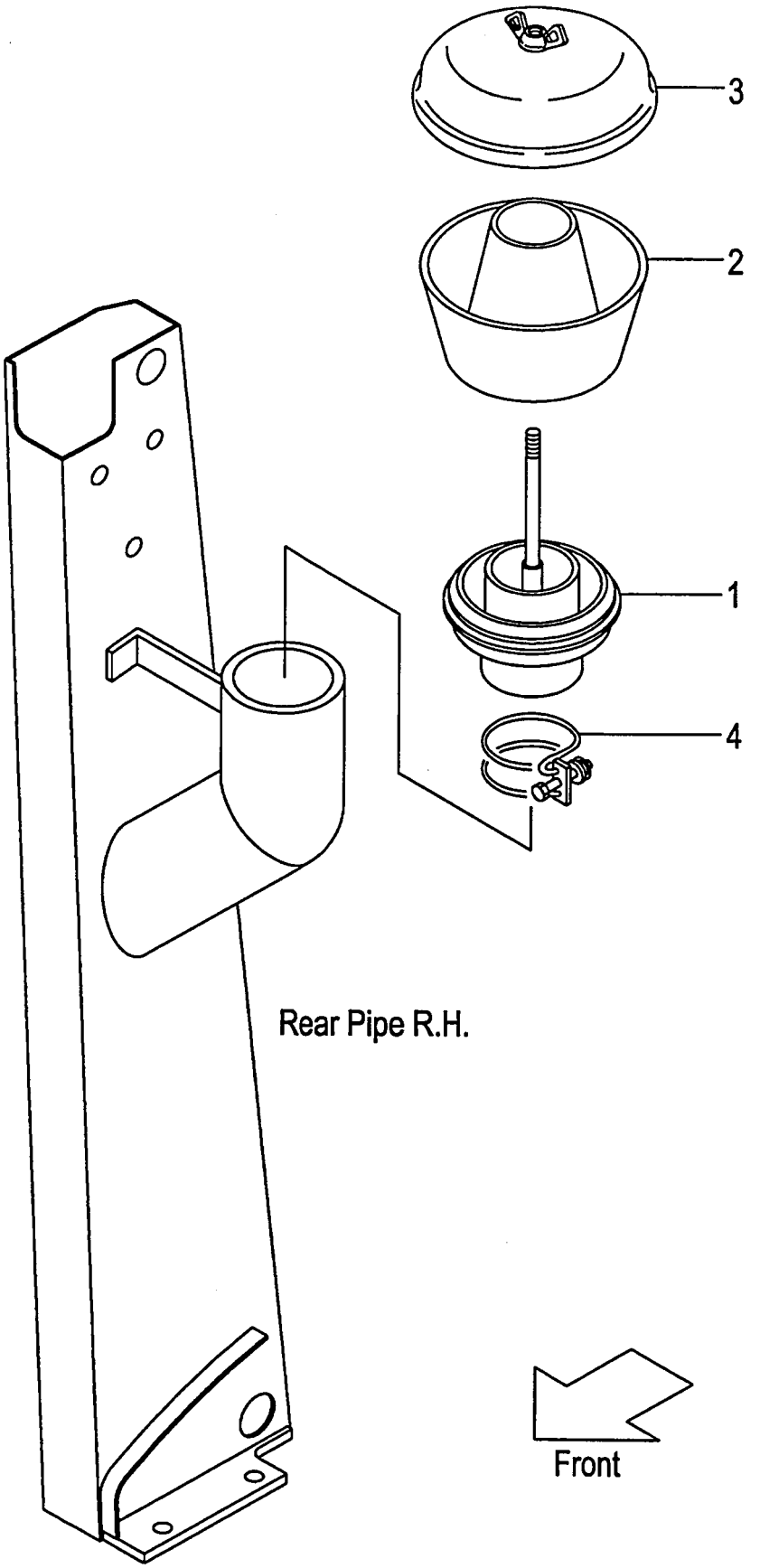

FIG.4
(F6011070)

A:FD10C12 FD10T12 FD15C12 FD15T12 FD18C12 FD18T12

Item No	Part No.	Mark	Description		Req'd	Remarks : Serial No.
A1	522B0-92021		PRE-CLEANER-ASSY	ﾌﾟﾚｸﾘｰﾅｱｯｾﾝ	1	[CAKB] INC.1-3
1	522B0-92031		SLEEVE	ｽﾘｰﾌﾞ	1	[CAKB]
2	522B0-92041		BODY	ﾎﾞﾃﾞｨ	1	[CAKB]
3	522B0-92051		COVER	ｶﾊﾞｰ	1	[CAKB]
4	04911-00090		CLIP	ｸﾘｯﾌﾟ	1	[CAKB]

FIG.5 COOLING UNIT

(F6012120) クーリングユニット

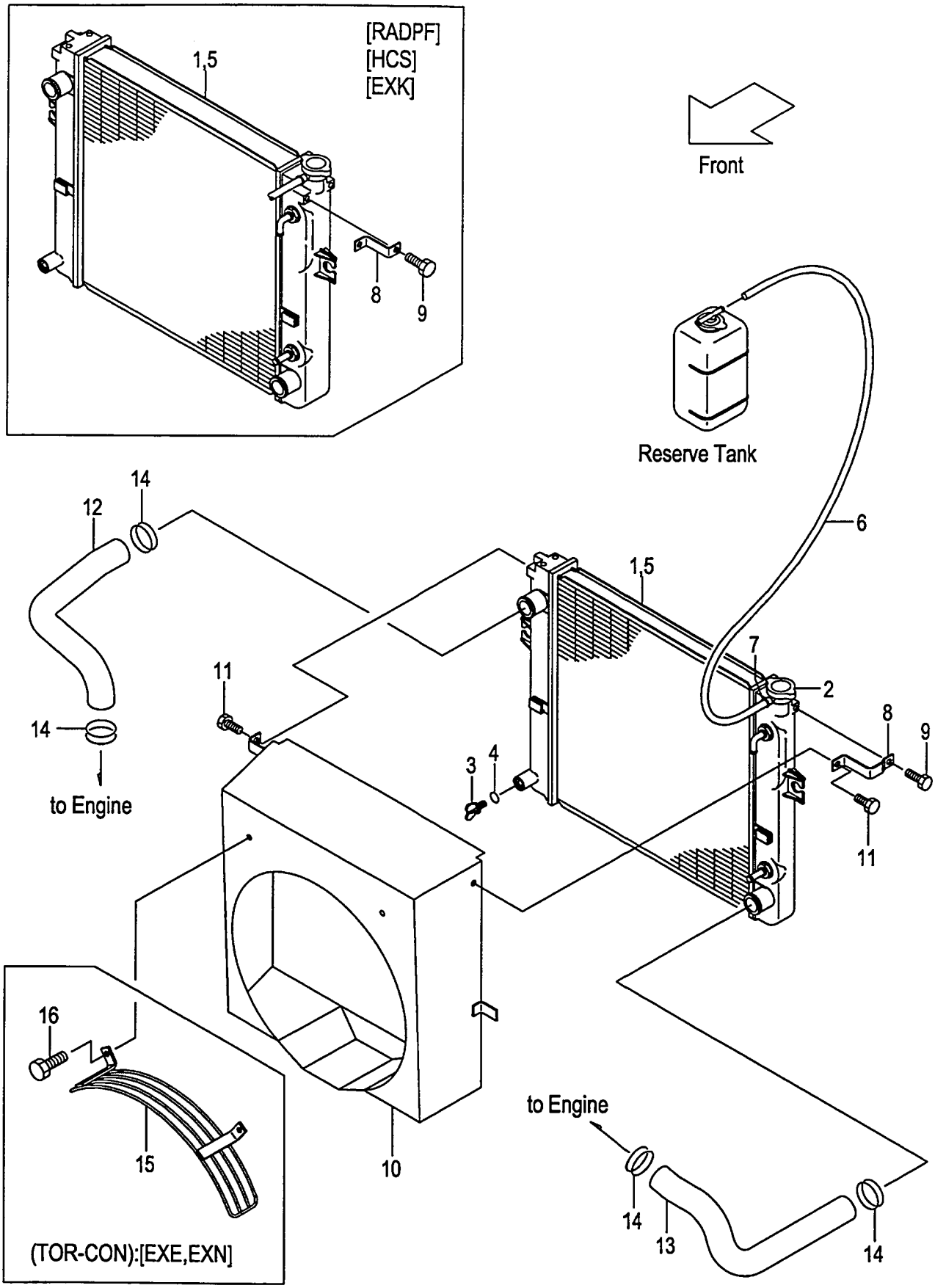

A:FD10C12 FD15C12 FD18C12
B:FD10T12 FD15T12 FD18T12

Item No	Part No.	Mark	Description		Req'd	Remarks : Serial No.
A1	219M2-10102		RADIATOR-ASSY	ﾗｼﾞｴｰﾀｱｯｾﾝ	1	A INC.1-7
-	219N2-10102		RADIATOR-ASSY	ﾗｼﾞｴｰﾀｱｯｾﾝ	1	B INC.1-7
-	519M6-60302		RADIATOR-ASSY	ﾗｼﾞｴｰﾀｱｯｾﾝ	1	A [RADPF][HCS][EXK] INC.1-7
-	519N6-60302		RADIATOR-ASSY	ﾗｼﾞｴｰﾀｱｯｾﾝ	1	B [RADPF][HCS][EXK] INC.1-7
1	NO PART NO.	#	RADIATOR	ﾗｼﾞｴｰﾀ	1	A
-	NO PART NO.	#	RADIATOR	ﾗｼﾞｴｰﾀ	1	B
-	NO PART NO.	#	RADIATOR	ﾗｼﾞｴｰﾀ	1	A [RADPF][HCS][EXK]
-	NO PART NO.	#	RADIATOR	ﾗｼﾞｴｰﾀ	1	B [RADPF][HCS][EXK]
2	222A2-10211		CAP	ｷｬｯﾌﾟ	1	
3	234A2-12201		COCK	ｺｯｸ	1	
4	234A2-12211		O-RING	Oﾘﾝｸﾞ	1	
5	NO PART NO.	#	NUT	ﾅｯﾄ	3	
-	NO PART NO.	#	NUT	ﾅｯﾄ	4	[RADPF][HCS][EXK]
6	219M2-12301		HOSE	ﾎｰｽ	1	
-	218M2-12301		HOSE	ﾎｰｽ	1	[RADPF][HCS][EXK]
7	23772-12071		CLIP	ｸﾘｯﾌﾟ	1	
8	239A2-12141		BRACKET	ﾌﾞﾗｹｯﾄ	1	
-	239B2-12141		BRACKET	ﾌﾞﾗｹｯﾄ	1	[RADPF][HCS][EXK]
9	01185-08016		BOLT	ﾎﾞﾙﾄ	1	
10	241G2-12101		SHROUD,FAN	ｼｭﾗｳﾄﾞ	1	
-	541G6-52001		SHROUD,FAN	ｼｭﾗｳﾄﾞ	1	[DSR006][DSR008]
11	01185-08016		BOLT	ﾎﾞﾙﾄ	2	
12	241G2-12001		HOSE,UPPER	ﾎｰｽ	1	
13	241G2-12011		HOSE,LOWER	ﾎｰｽ	1	
14	04911-00046		CLIP	ｸﾘｯﾌﾟ	4	
15	517H3-82221		GUARD,FAN	ｶﾞｰﾄﾞ	1	B [EXE][EXN]
16	01185-08020		BOLT	ﾎﾞﾙﾄ	2	B [EXE][EXN]

FIG.6 RADIATOR PARTS & RESERVE TANK

(F6012130) ﾗｼﾞｴｰﾀﾊﾟｰﾂ&ﾘｻﾞｰﾌﾞﾀﾝｸ

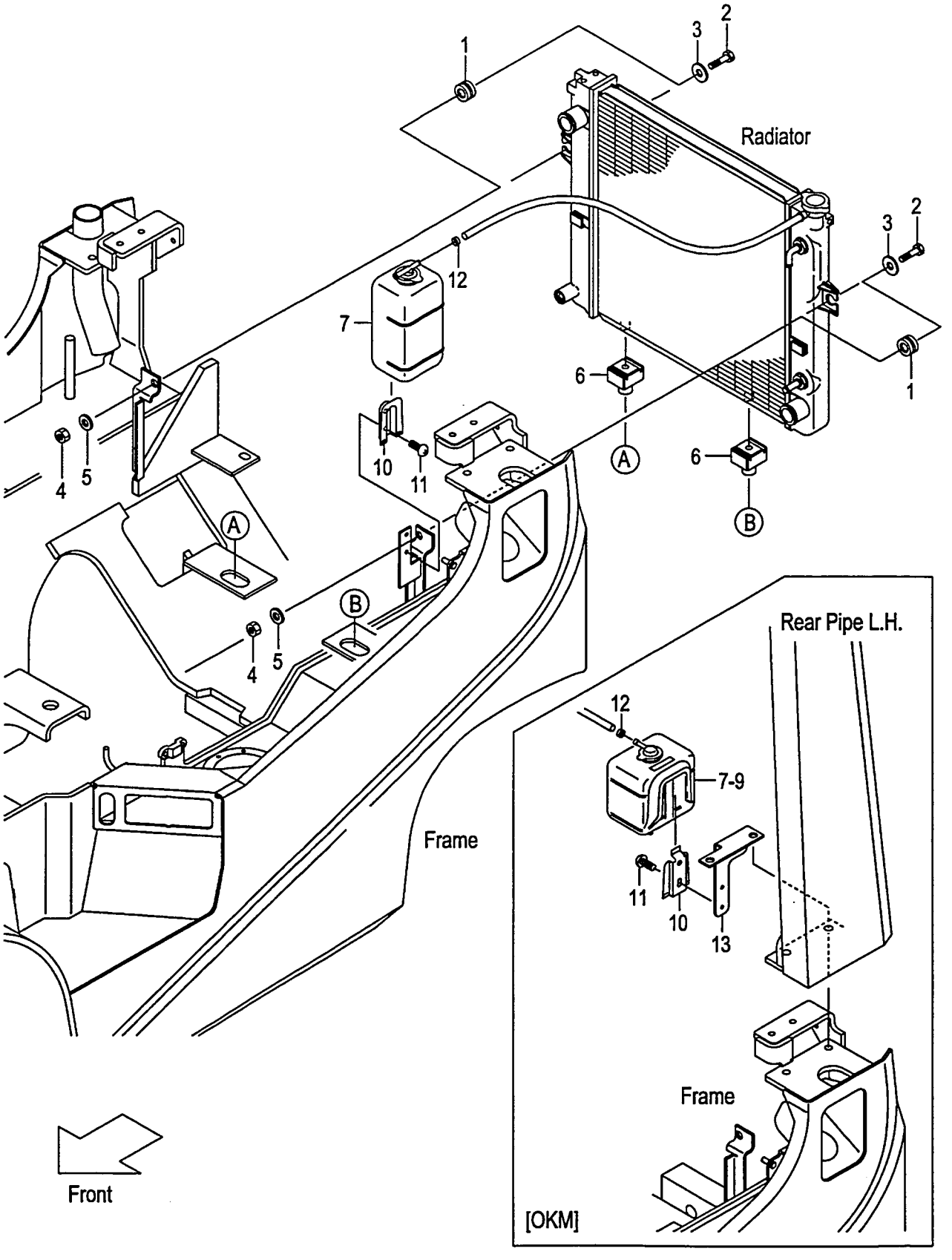

A:FD10C12 FD10T12 FD15C12 FD15T12 FD18C12 FD18T12

Item No	Part No.	Mark	Description		Req'd	Remarks : Serial No.
1	214A2-12001		RUBBER	ﾗﾊﾞｰ	2	
2	214A2-12021		BOLT	ﾎﾞﾙﾄ	2	
3	22252-32251		WASHER	ﾜｯｼｬ	2	
4	23652-12051		NUT,LOCK	ﾅｯﾄ	2	
5	02000-00010		WASHER	ﾜｯｼｬ	2	
6	239A2-12021		RUBBER	ﾗﾊﾞｰ	2	
7	256A2-12031		TANK,RESERVE	ﾀﾝｸ	1	
-	214A2-12121		TANK,RESERVE	ﾀﾝｸ	1	[OKM] INC.8,9
8	214A2-13001		CAP	ｷｬｯﾌﾟ	1	[OKM]
9	214A2-13011		PACKING	ﾊﾟｯｷﾝｸﾞ	1	[OKM]
10	256A2-12041		BRACKET	ﾌﾞﾗｹｯﾄ	1	
-	214A2-12141		BRACKET	ﾌﾞﾗｹｯﾄ	1	[OKM]
11	214A2-42611		SCREW	ｽｸﾘｭ	2	
12	214A2-12201		CLIP	ｸﾘｯﾌﾟ	1	
13	539A6-22111		BRACKET	ﾌﾞﾗｹｯﾄ	1	[OKM]

FIG.7 DUST SCREEN [DSR006][DSR008]

(F6012140) ﾀﾞｽﾄｽｸﾘｰﾝ

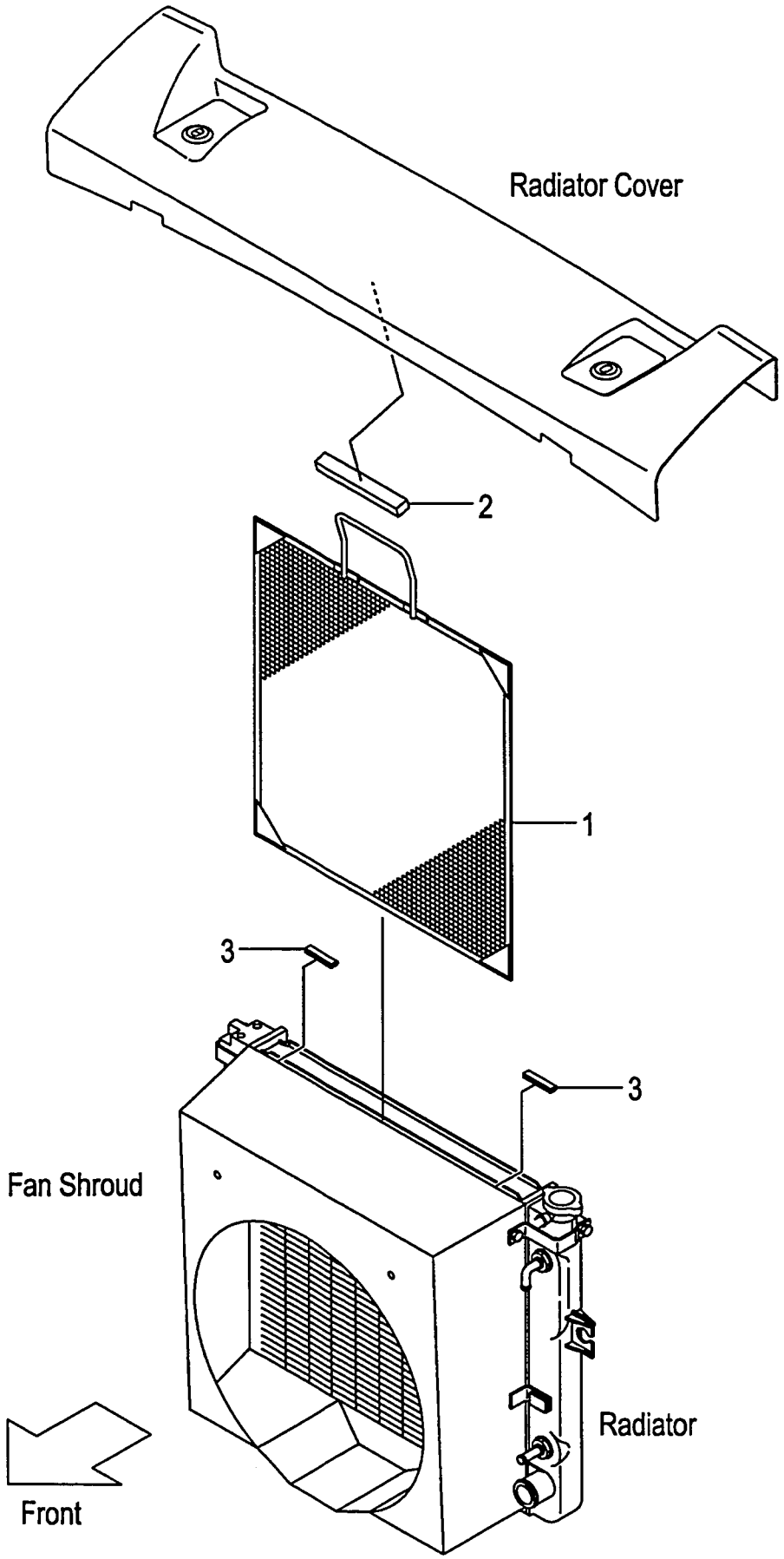

FIG.7
(F6012140)

A:FD10C12 FD10T12 FD15C12 FD15T12 FD18C12 FD18T12

Item No	Part No.	Mark	Description		Req'd	Remarks : Serial No.
1	519G6-52051		SCREEN,DUST	ｽｸﾘｰﾝ	1	[DSR006]
-	519G6-52151		SCREEN,DUST	ｽｸﾘｰﾝ	1	[DSR008]
2	509P3-72151		RUBBER	ﾗﾊﾞｰ	1	[DSR006][DSR008]
3	209P6-42831		EDGING	ｴｯｼﾞﾝｸﾞ	2	[DSR006][DSR008]

FIG.8 FUEL SYSTEM

(F6012220) フューエルシステム

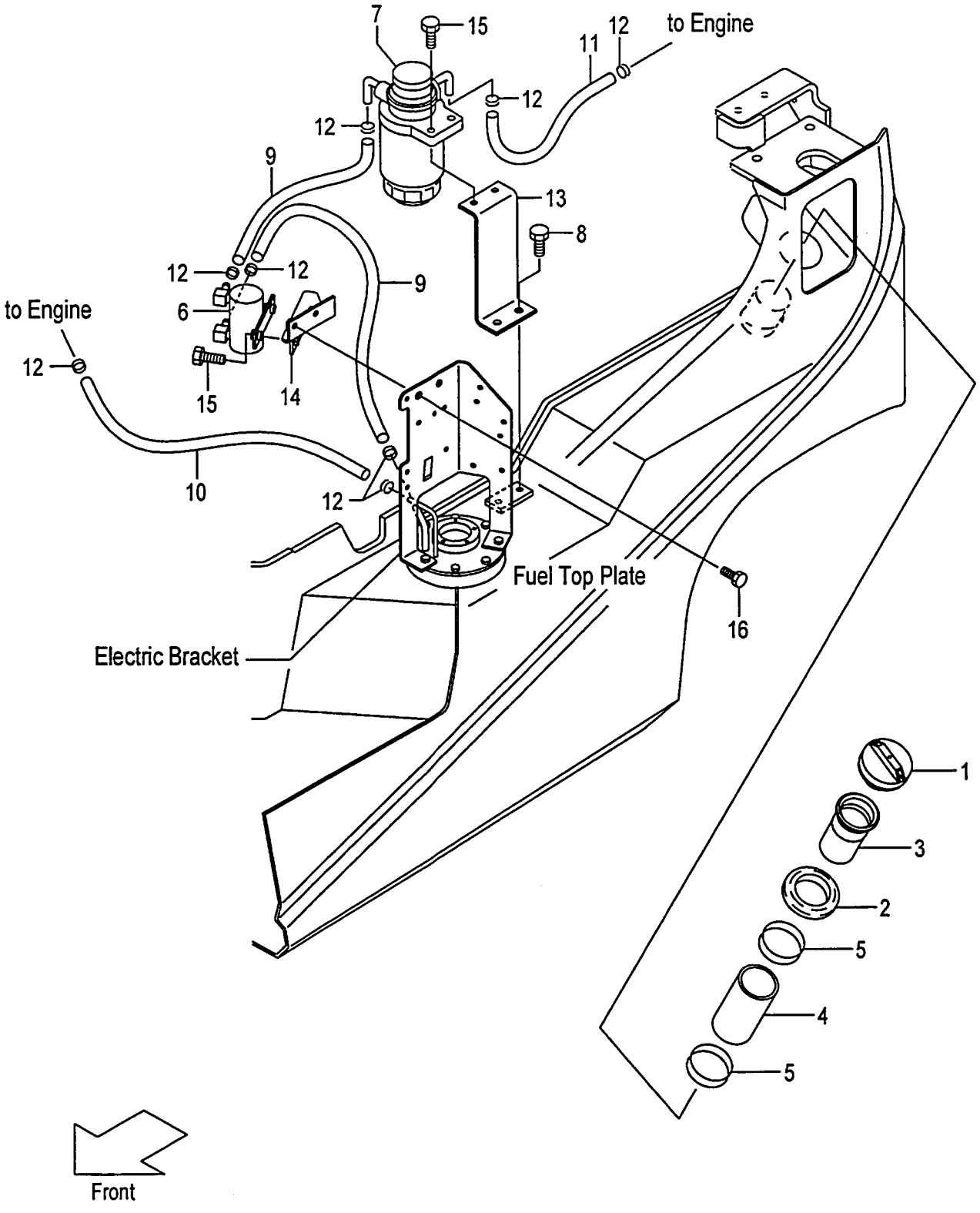

FIG.8
(F6012220)

A:FD10C12 FD10T12 FD15C12 FD15T12 FD18C12 FD18T12

Item No	Part No.	Mark	Description		Req'd	Remarks : Serial No.
1	216G2-22051		CAP,FUEL	ｷｬｯﾌﾟ	1	
2	216G2-22211		GROMMET	ｸﾞﾛﾒｯﾄ	1	
3	218G2-22001		PIPE,FUEL	ﾊﾟｲﾌﾟ	1	
4	218G2-22051		HOSE,FUEL	ﾎｰｽ	1	
5	04911-00060		CLIP	ｸﾘｯﾌﾟ	2	
6	241G2-22201		PUMP,FUEL	ﾎﾟﾝﾌﾟ	1	
7	241G2-22211		FILTER,FUEL	ﾌｨﾙﾀ	1	
8	01183-08016		BOLT	ﾎﾞﾙﾄ	2	
9	21322-22011		HOSE,FUEL,7.5X250	ﾎｰｽ	2	
10	24662-22141		HOSE,FUEL,6.5X380	ﾎｰｽ	1	
11	24662-22131		HOSE,FUEL,7.5X270	ﾎｰｽ	1	
12	22192-22091		CLIP	ｸﾘｯﾌﾟ	8	
13	241G2-22151		BRACKET,FUEL-FILTER	ﾌﾞﾗｹｯﾄ	1	
14	241G2-22031		BRACKET,FUEL-PUMP	ﾌﾞﾗｹｯﾄ	1	
15	01186-08025		BOLT	ﾎﾞﾙﾄ	4	
16	01186-06020		BOLT	ﾎﾞﾙﾄ	2	

FIG.9 EXHAUST SYSTEM

(F6012320) エキゾーストシステム

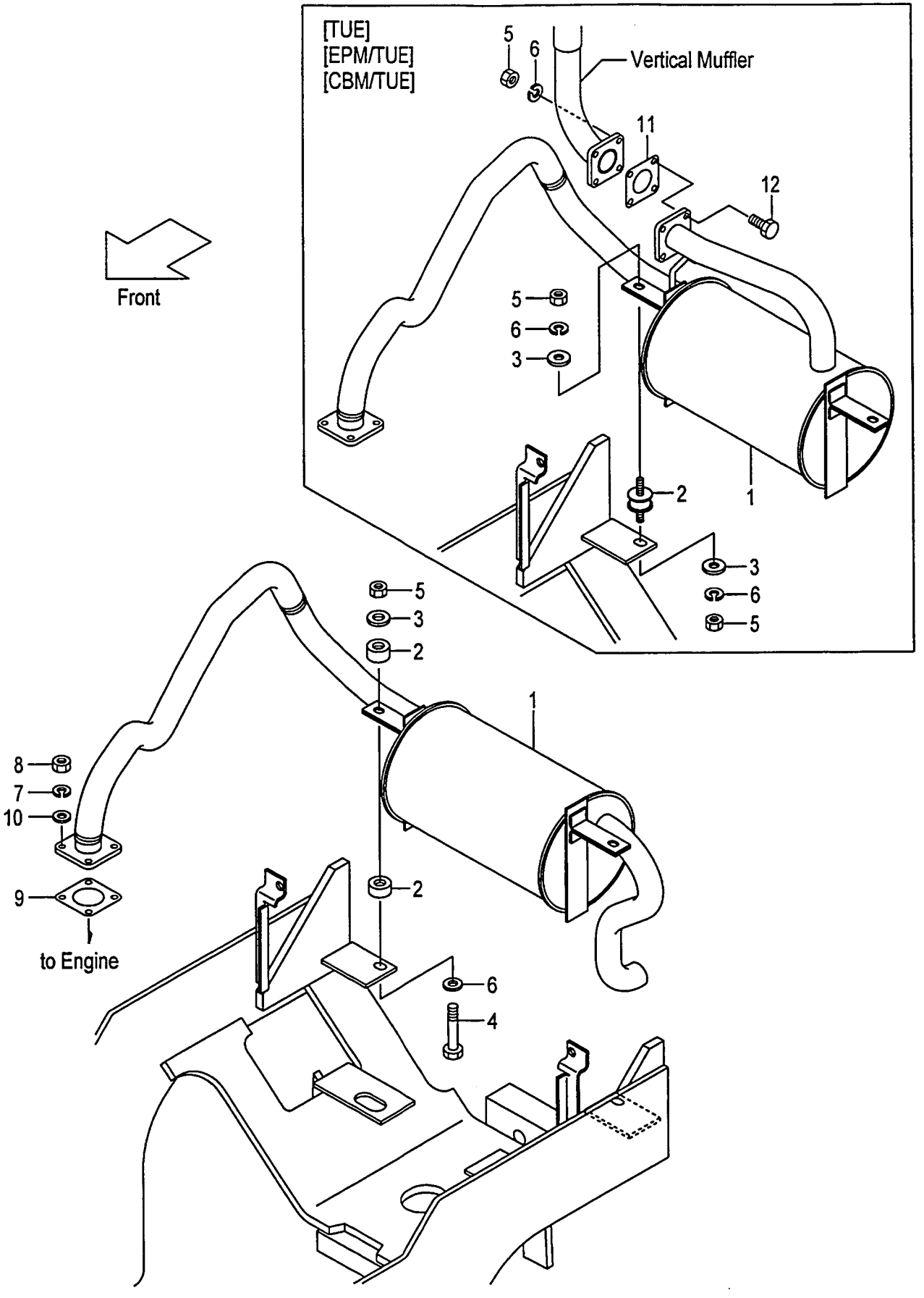

FIG.9
(F6012320)

A:FD10C12 FD10T12 FD15C12 FD15T12 FD18C12 FD18T12

Item No	Part No.	Mark	Description		Req'd	Remarks : Serial No.
1	241G2-30101		MUFFLER	ﾏﾌﾗ	1	
-	541G0-80101		MUFFLER	ﾏﾌﾗ	1	[TUE]
-	541G1-70101		MUFFLER	ﾏﾌﾗ	1	[EPM]
-	541G0-80201		MUFFLER	ﾏﾌﾗ	1	[EPM/TUE]
-	541G1-70201		MUFFLER	ﾏﾌﾗ	1	[CBM]
-	541G0-80301		MUFFLER	ﾏﾌﾗ	1	[CBM/TUE]
2	22252-32241		RUBBER	ﾗﾊﾞｰ	4	
-	539A0-82201		RUBBER	ﾗﾊﾞｰ	2	[TUE][EPM/TUE][CBM/TUE]
3	22252-32251		WASHER	ﾜｯｼｬ	2	
-	124T3-43041		PLATE	ﾌﾟﾚｰﾄ	4	[TUE][EPM/TUE][CBM/TUE]
4	21232-32551		BOLT	ﾎﾞﾙﾄ	2	(WITHOUT TUE,EPM/TUE,CBM/TUE)
5	23652-12051		NUT,LOCK	ﾅｯﾄ	2	
-	01400-00008		NUT	ﾅｯﾄ	8	[TUE][EPM/TUE][CBM/TUE]
6	02000-00010		WASHER	ﾜｯｼｬ	2	
-	02010-00008		WASHER	ﾜｯｼｬ	8	[TUE][EPM/TUE][CBM/TUE]
7	02010-00008		WASHER	ﾜｯｼｬ	4	
8	01400-20008		NUT	ﾅｯﾄ	4	
9	241G2-32001		GASKET	ｶﾞｽｹｯﾄ	1	
10	02000-00008		WASHER	ﾜｯｼｬ	4	
11	217G2-32001		GASKET	ｶﾞｽｹｯﾄ	1	[TUE][EPM/TUE][CBM/TUE]
12	01182-08025		BOLT	ﾎﾞﾙﾄ	4	[TUE][EPM/TUE][CBM/TUE]

FIG.10 POST & TAIL [TUE]
(F6012330) ﾎﾟｽﾄ&ﾃｲﾙ

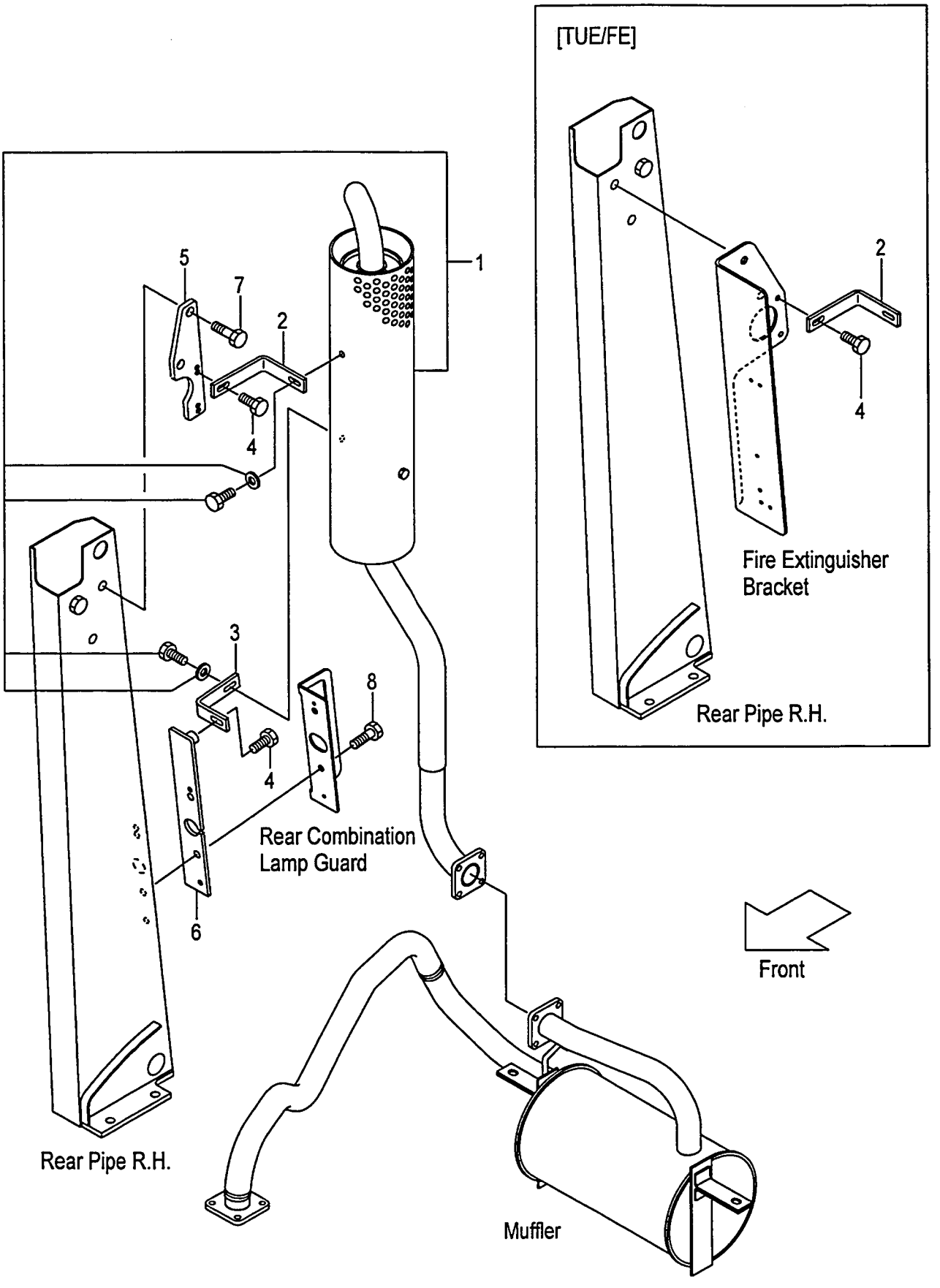

FIG.10
(F6012330)

A:FD10C12 FD10T12 FD15C12 FD15T12 FD18C12 FD18T12

Item No	Part No.	Mark	Description		Req'd	Remarks : Serial No.
1	537A0-80302		MUFFLER,VERTICAL	ﾏﾌﾗ	1	[TUE]
2	518G0-82001		STAY	ｽﾃｰ	1	[TUE]
3	524T1-72031		STAY	ｽﾃｰ	1	[TUE]
4	01185-08016		BOLT	ﾎﾞﾙﾄ	2	[TUE]
5	510F0-82032		BRACKET,STAY	ﾌﾞﾗｹｯﾄ	1	[TUE](WITHOUT TUE/FE)
6	534A0-82101		BRACKET,STAY	ﾌﾞﾗｹｯﾄ	1	[TUE]
7	01186-12045		BOLT	ﾎﾞﾙﾄ	2	[TUE](WITHOUT TUE/FE)
8	01183-08022		BOLT	ﾎﾞﾙﾄ	2	[TUE]

FIG.11 COMBINATION METER

(F6012420) コンビネーションメータ

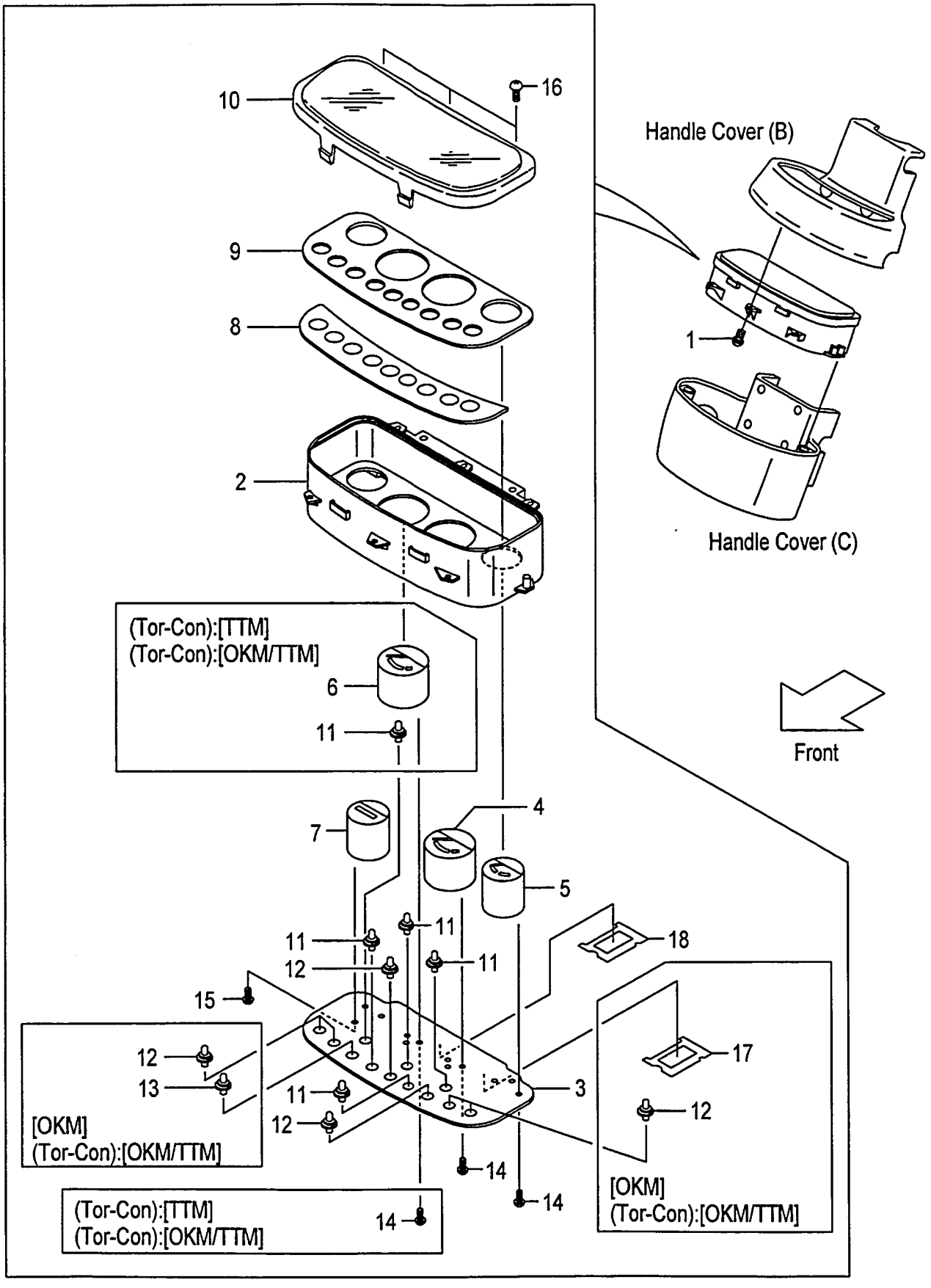

A:FD10C12 FD15C12 FD18C12
B:FD10T12 FD15T12 FD18T12

FIG.11
(F6012420)

Item No	Part No.	Mark	Description		Req'd	Remarks : Serial No.
1	222A2-42031		SCREW	ｽｸﾘｭ	5	
A1	217G2-40301		METER-ASSY,COMBINATION	ﾒｰﾀｱｯｾﾝ	1	INC.2-5,7-12,14-16,18
-	517G6-20101		METER-ASSY,COMBINATION	ﾒｰﾀｱｯｾﾝ	1	[OKM] INC.2-5,7-18
-	517H8-80101		METER-ASSY,COMBINATION	ﾒｰﾀｱｯｾﾝ	1	B
						[TTM] INC.2-12,14-16,18
-	517G6-20201		METER-ASSY,COMBINATION	ﾒｰﾀｱｯｾﾝ	1	B
						[OKM/TTM] INC.2-18
2	216G2-43201		HOUSING	ﾊｳｼﾞﾝｸﾞ	1	
3	216G2-43221		CIRCUIT,PRINTED	ｻｰｷｯﾄ	1	
-	516G6-22051		CIRCUIT,PRINTED	ｻｰｷｯﾄ	1	[OKM]
-	516G6-22051		CIRCUIT,PRINTED	ｻｰｷｯﾄ	1	B
						[OKM/TTM]
4	216G2-43231		GAUGE,WATER-TEMP	ｹﾞｰｼﾞ	1	
5	216G2-43241		GAUGE,FUEL	ｹﾞｰｼﾞ	1	
6	216G2-43251		GAUGE,OIL-TEMP	ｹﾞｰｼﾞ	1	B
						[TTM][OKM/TTM]
7	216G2-43261		METER,HOUR	ﾒｰﾀ	1	
8	216G2-43271		LENS	ﾚﾝｽﾞ	1	
9	216G2-43281		PLATE,SHADOW	ﾌﾟﾚｰﾄ	1	
-	216G2-43291		PLATE,SHADOW	ﾌﾟﾚｰﾄ	1	B
						[TTM][OKM/TTM]
10	216G2-43301		COVER,FRONT	ｶﾊﾞｰ	1	
11	222A2-42331		SOCKET & BULB	ｿｹｯﾄ&ﾊﾞﾙﾌﾞ	4	(14V/1.4W)
-	222A2-42331		SOCKET & BULB	ｿｹｯﾄ&ﾊﾞﾙﾌﾞ	5	B
						[TTM][OKM/TTM](14V/1.4W)
12	222A2-42401		SOCKET & BULB	ｿｹｯﾄ&ﾊﾞﾙﾌﾞ	2	(13.5V/2W)
-	222A2-42401		SOCKET & BULB	ｿｹｯﾄ&ﾊﾞﾙﾌﾞ	6	[OKM](13.5V/2W)
-	222A2-42401		SOCKET & BULB	ｿｹｯﾄ&ﾊﾞﾙﾌﾞ	6	B
						[OKM/TTM](13.5V/2W)
13	222A2-42341		SOCKET & BULB	ｿｹｯﾄ&ﾊﾞﾙﾌﾞ	1	[OKM](14V/3W)
-	222A2-42341		SOCKET & BULB	ｿｹｯﾄ&ﾊﾞﾙﾌﾞ	1	B
						[OKM/TTM](14V/3W)
14	229F2-42421		SCREW	ｽｸﾘｭ	6	
-	229F2-42421		SCREW	ｽｸﾘｭ	9	B
						[TTM][OKM/TTM]
15	229F2-42431		SCREW	ｽｸﾘｭ	3	
16	222A2-42361		SCREW	ｽｸﾘｭ	3	
17	516G6-22031		GASKET	ｶﾞｽｹｯﾄ	1	[OKM]
-	516G6-22031		GASKET	ｶﾞｽｹｯﾄ	1	B
						[OKM/TTM]
18	216G2-43161		GASKET	ｶﾞｽｹｯﾄ	1	

FIG.12 STEERING SHAFT COVER (CLUTCH)

(F6012430) ステアリング゛シャフトカバ゛ー

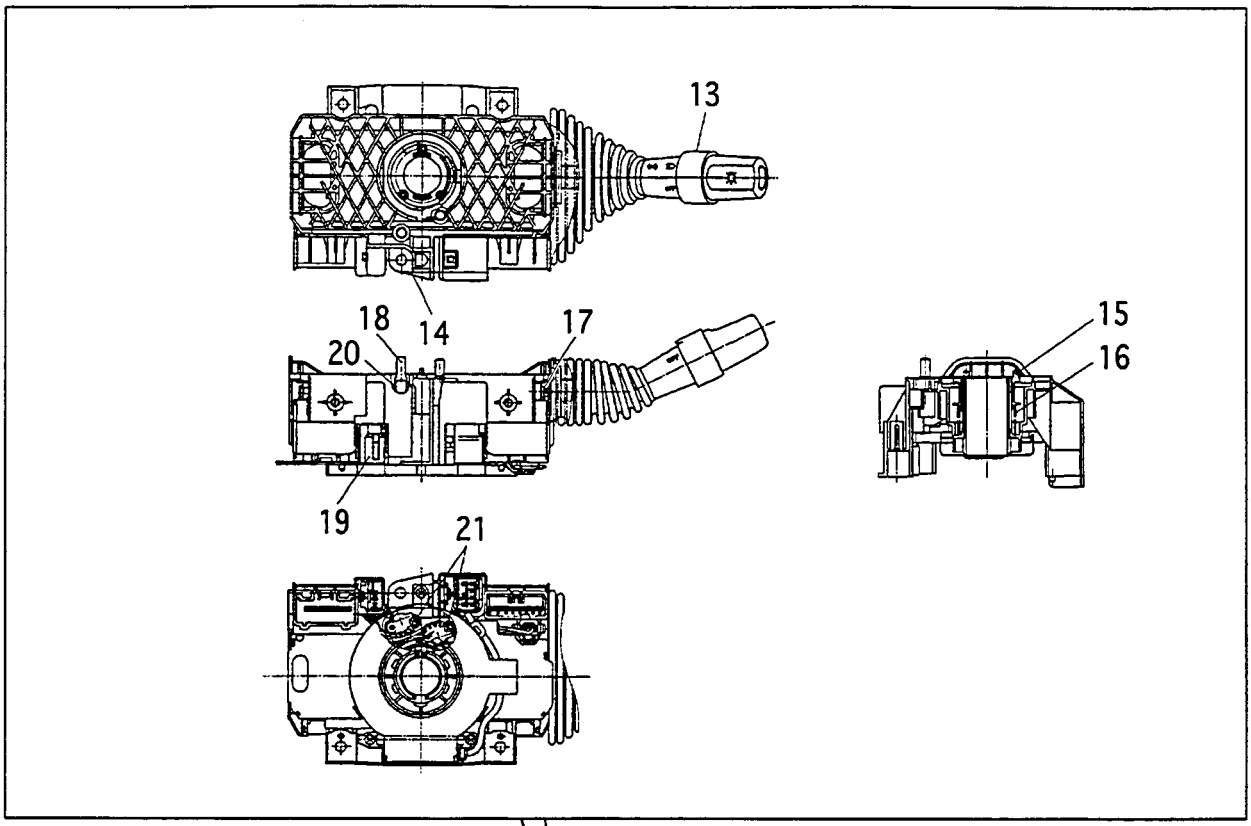

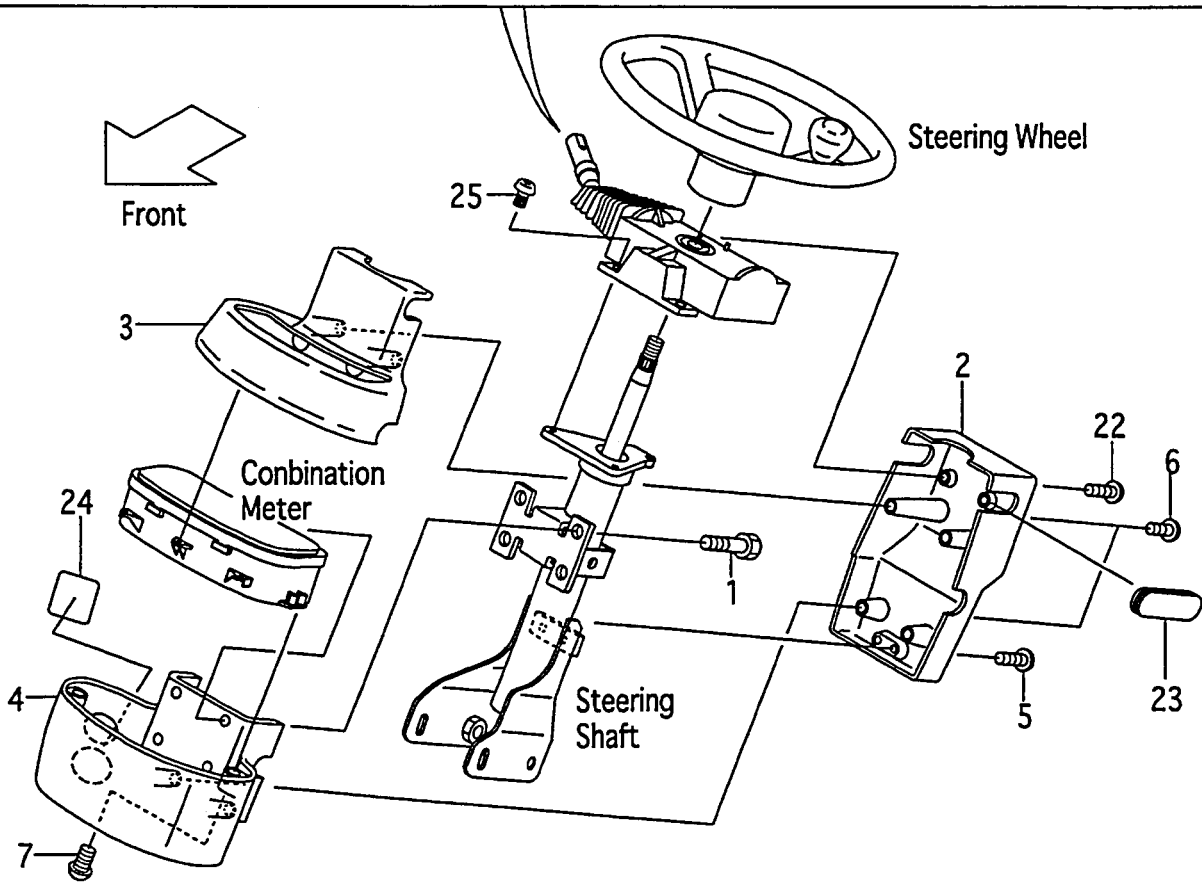

FIG.12

(F6012430)

A:FD10C12 FD15C12 FD18C12

Item No	Part No.	Mark	Description		Req'd	Remarks : Serial No.
1	01185-06016		BOLT	ﾎﾞﾙﾄ	4	
2	239A4-12501		COVER,HANDLE,A	ｶﾊﾞｰ	1	
3	239A4-12511		COVER,HANDLE,B	ｶﾊﾞｰ	1	
4	239A4-12521		COVER,HANDLE,C	ｶﾊﾞｰ	1	
-	539A7-72001		COVER,HANDLE,C	ｶﾊﾞｰ	1	[SWD]
5	214A6-42771		SCREW	ｽｸﾘｭ	2	
6	222A2-42031		SCREW	ｽｸﾘｭ	4	
7	216G4-12091		SCREW	ｽｸﾘｭ	2	
8	04913-11200	+	BAND	ﾊﾞﾝﾄﾞ	1	
9	216G2-42131	+	BAND	ﾊﾞﾝﾄﾞ	14	
10	04913-10100	+	BAND	ﾊﾞﾝﾄﾞ	6	
11	04913-11100	+	BAND	ﾊﾞﾝﾄﾞ	2	
12	04913-10200	+	BAND	ﾊﾞﾝﾄﾞ	2	
A1	239A2-40501		SWITCH-ASSY,COMBINATION	ｽｲｯﾁｱｯｾﾝ	1	INC.13-21
13	280C2-42331		SWITCH,TURN-SIGNAL	ｽｲｯﾁ	1	
14	NO PART NO.	#	BODY	ﾎﾞﾃﾞｨ	1	
15	NO PART NO.	#	CAM,CANCEL,RH	ｶﾑ	1	
16	NO PART NO.	#	SPRING	ｽﾌﾟﾘﾝｸﾞ	1	
17	NO PART NO.	#	SCREW	ｽｸﾘｭ	4	
18	280C2-42351		CONTACT,HORN	ｺﾝﾀｸﾄ	2	
19	NO PART NO.	#	CODE,CP-HORN	ｺｰﾄﾞ	1	
20	NO PART NO.	#	SPRING	ｽﾌﾟﾘﾝｸﾞ	2	
21	NO PART NO.	#	SCREW	ｽｸﾘｭ	2	
22	209K2-43001		SCREW	ｽｸﾘｭ	2	
23	239A4-12541		GROMMET,HANDLE-COVER	ｸﾞﾛﾒｯﾄ	1	
24	229F6-42201		SEAL,PANEL-COVER	ｼｰﾙ	1	
25	01033-05014		SCREW	ｽｸﾘｭ	3	

FIG.13 STEERING SHAFT COVER (TOR-CON)

(F6012440) ステアリング゛シャフトカバ゛ー

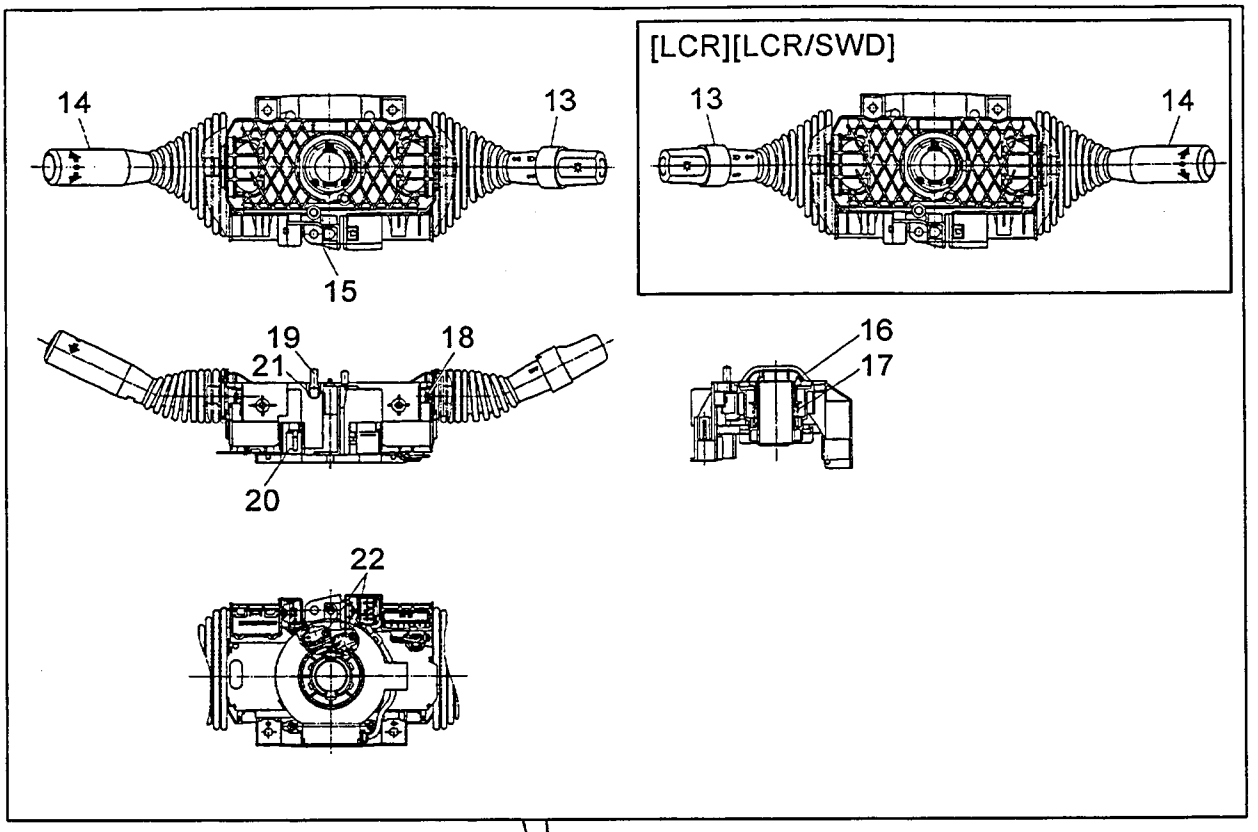

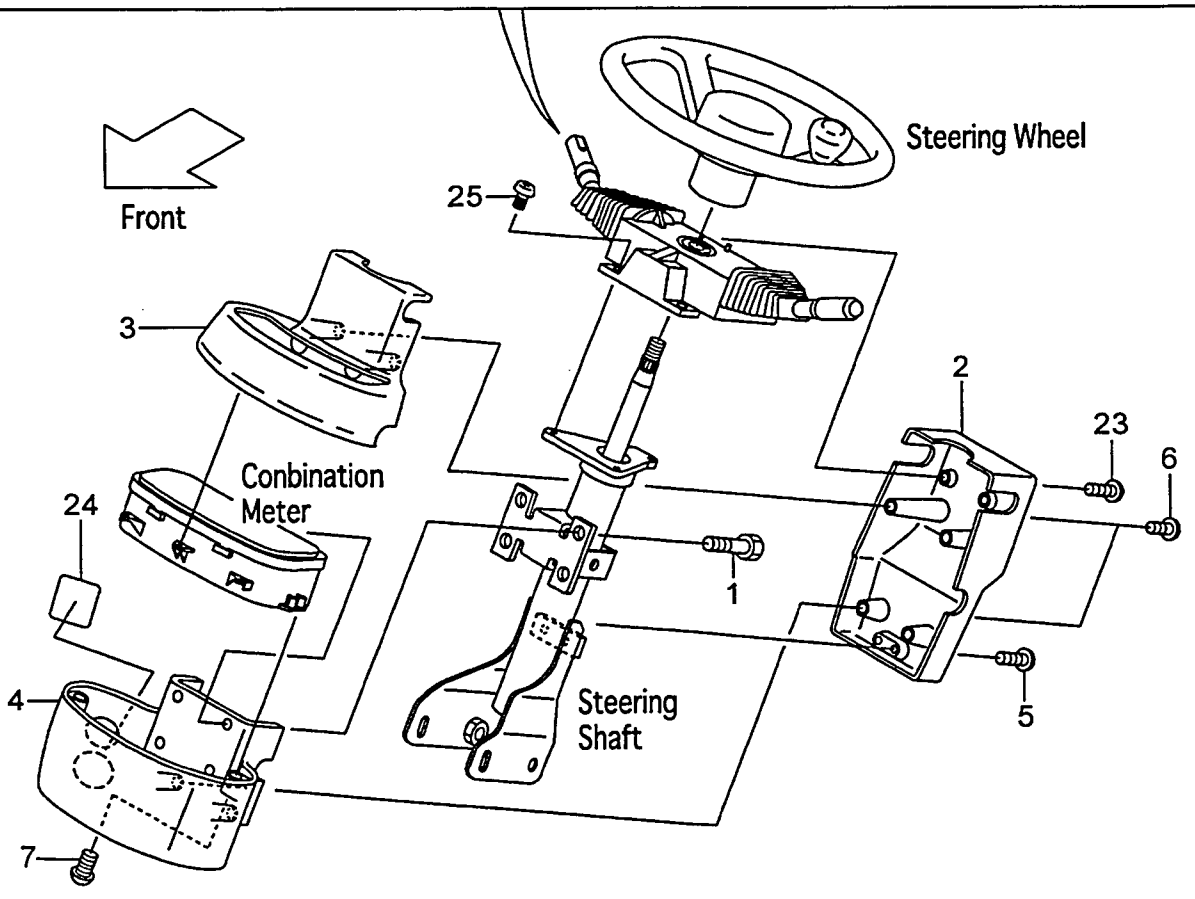

FIG.13
(F6012440)

A:FD10T12 FD15T12 FD18T12

Item No	Part No.	Mark	Description		Req'd	Remarks : Serial No.
1	01185-06016		BOLT	ﾎﾞﾙﾄ	4	
2	239A4-12501		COVER,HANDLE,A	ｶﾊﾞｰ	1	
3	239A4-12511		COVER,HANDLE,B	ｶﾊﾞｰ	1	
4	239A4-12521		COVER,HANDLE,C	ｶﾊﾞｰ	1	
-	539A7-72001		COVER,HANDLE,C	ｶﾊﾞｰ	1	[SWD][LCR/SWD]
5	214A6-42771		SCREW	ｽｸﾘｭ	2	
6	222A2-42031		SCREW	ｽｸﾘｭ	4	
7	216G4-12091		SCREW	ｽｸﾘｭ	2	
8	04913-11200	+	BAND	ﾊﾞﾝﾄﾞ	1	
9	216G2-42131	+	BAND	ﾊﾞﾝﾄﾞ	14	
10	04913-10100	+	BAND	ﾊﾞﾝﾄﾞ	6	
11	04913-11100	+	BAND	ﾊﾞﾝﾄﾞ	2	
12	04913-10200	+	BAND	ﾊﾞﾝﾄﾞ	2	
A1	209K2-40501		SWITCH-ASSY,COMBINATION	ｽｲｯﾁｱｯｾﾝ	1	INC.13-22
-	509K2-30101		SWITCH-ASSY,COMBINATION	ｽｲｯﾁｱｯｾﾝ	1	[LCR][LCR/SWD] INC.13-22
13	280C2-42331		SWITCH,TURN-SIGNAL	ｽｲｯﾁ	1	
-	280C2-42301		SWITCH,TURN-SIGNAL	ｽｲｯﾁ	1	[LCR][LCR/SWD]
14	280C2-42341		SWITCH,DIRECTION	ｽｲｯﾁ	1	
-	280C2-42311		SWITCH,DIRECTION	ｽｲｯﾁ	1	[LCR][LCR/SWD]
15	NO PART NO.	#	BODY	ﾎﾞﾃﾞｨ	1	
16	NO PART NO.	#	CAM,CANCEL,RH	ｶﾑ	1	
-	NO PART NO.	#	CAM,CANCEL,RH	ｶﾑ	1	[LCR][LCR/SWD]
17	NO PART NO.	#	SPRING	ｽﾌﾟﾘﾝｸﾞ	1	
18	NO PART NO.	#	SCREW	ｽｸﾘｭ	4	
19	280C2-42351		CONTACT,HORN	ｺﾝﾀｸﾄ	2	
20	NO PART NO.	#	CODE,CP-HORN	ｺｰﾄﾞ	1	
21	NO PART NO.	#	SPRING	ｽﾌﾟﾘﾝｸﾞ	2	
22	NO PART NO.	#	SCREW	ｽｸﾘｭ	2	
23	209K2-43001		SCREW	ｽｸﾘｭ	2	
24	229F6-42201		SEAL,PANEL-COVER	ｼｰﾙ	1	
25	01033-05014		SCREW	ｽｸﾘｭ	3	

FIG.14 ELECTRIC PARTS

(F6012460) エレクトリックパーツ

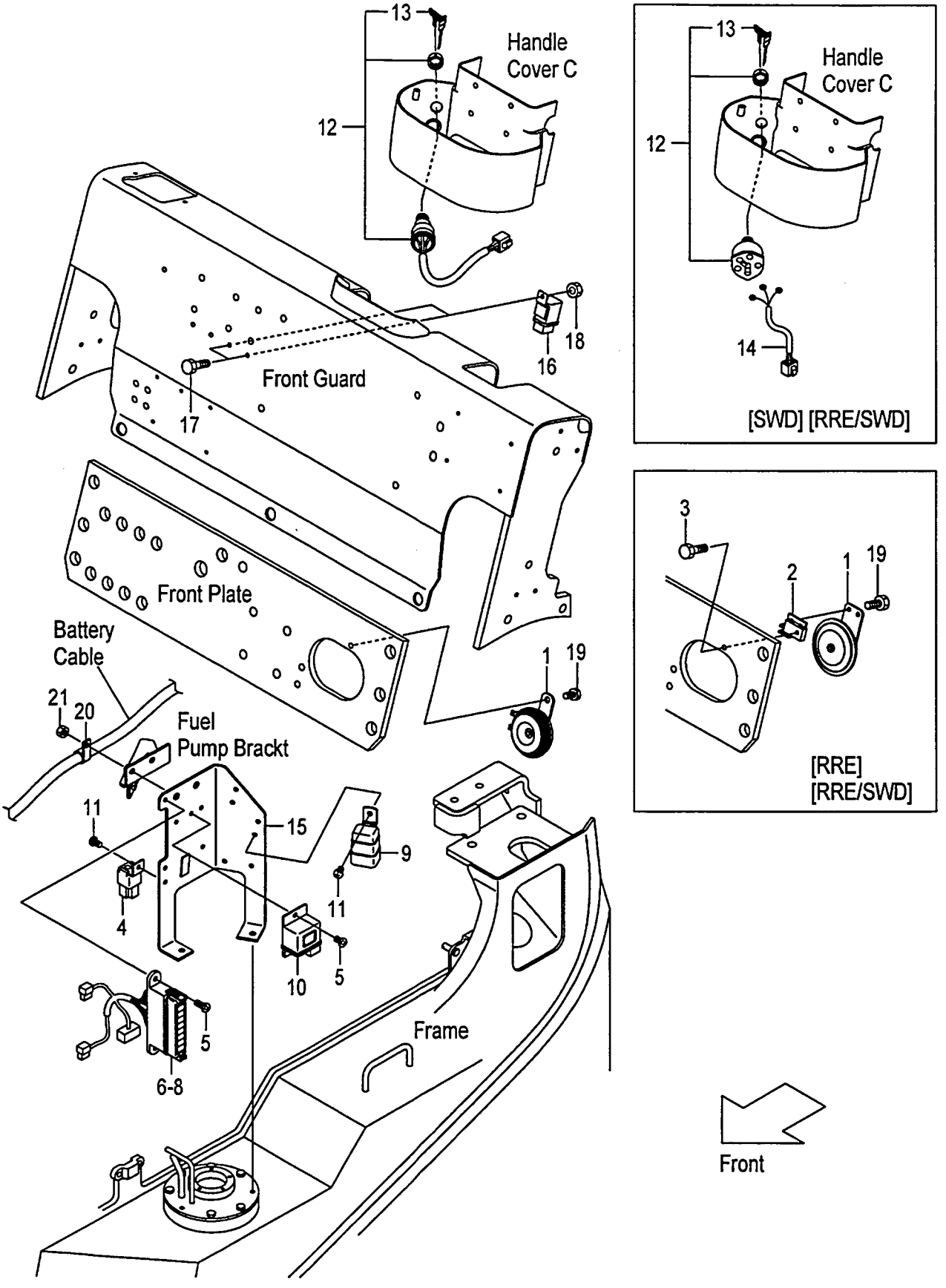

A:FD10C12 FD10T12 FD15C12 FD15T12 FD18C12 FD18T12

Item No	Part No.	Mark	Description		Req'd	Remarks : Serial No.
1	216G2-43651		HORN	ﾎｰﾝ	1	
-	20712-40275		HORN	ﾎｰﾝ	1	[RRE][RRE/SWD]
2	539A9-92001		BRACKET,HORN	ﾌﾞﾗｹｯﾄ	1	[RRE][RRE/SWD]
3	01183-06025		BOLT	ﾎﾞﾙﾄ	1	[RRE][RRE/SWD]
4	216G2-43711		UNIT,FLASHER	ﾕﾆｯﾄ	1	
5	214A2-42621		SCREW	ｽｸﾘｭ	3	
6	235C2-40301		BOX,FUSE	ﾎﾞｯｸｽ	1	INC.7,8
7	214T2-42311		FUSE,10A	ﾋｭｰｽﾞ	7	
8	214T2-42321		FUSE,30A	ﾋｭｰｽﾞ	1	
9	216G2-42321		RELAY,STARTER	ﾘﾚｰ	1	
10	241G2-42101		TIMER	ﾀｲﾏ	1	
11	214A2-42611		SCREW	ｽｸﾘｭ	2	
12	216G2-42311		SWITCH,STARTER	ｽｲｯﾁ	1	INC.13
-	24352-42521		SWITCH,STARTER	ｽｲｯﾁ	1	[SWD][RRE/SWD] INC.13
13	216G2-43401		KEY,SPARE,511323	ｷｰ	1	(1SET=2PCS)
-	216G2-43411		KEY,SPARE,512421	ｷｰ	(1)	(1SET=2PCS)
-	216G2-43421		KEY,SPARE,513454	ｷｰ	(1)	(1SET=2PCS)
-	93956-59279		KEY,SPARE,511323	ｷｰ	1	[SWD][RRE/SWD](1SET=2PCS)
14	534A7-72001		WIRE,LEAD	ﾜｲﾔ	1	[SWD][RRE/SWD]
15	218G2-42001		BRACKET,ELECTRIC	ﾌﾞﾗｹｯﾄ	1	
16	26062-42881		RELAY,12V	ﾘﾚｰ	2	
17	239A5-42381		BOLT	ﾎﾞﾙﾄ	2	
18	01400-00006		NUT	ﾅｯﾄ	2	
19	01185-08016		BOLT	ﾎﾞﾙﾄ	1	
-	01183-06016		BOLT	ﾎﾞﾙﾄ	2	[RRE][RRE/SWD]
20	214A2-42331		CLIP	ｸﾘｯﾌﾟ	1	
21	01400-00008		NUT	ﾅｯﾄ	1	

FIG.15 BATTERY
(F6012480) ﾊﾞｯﾃﾘ

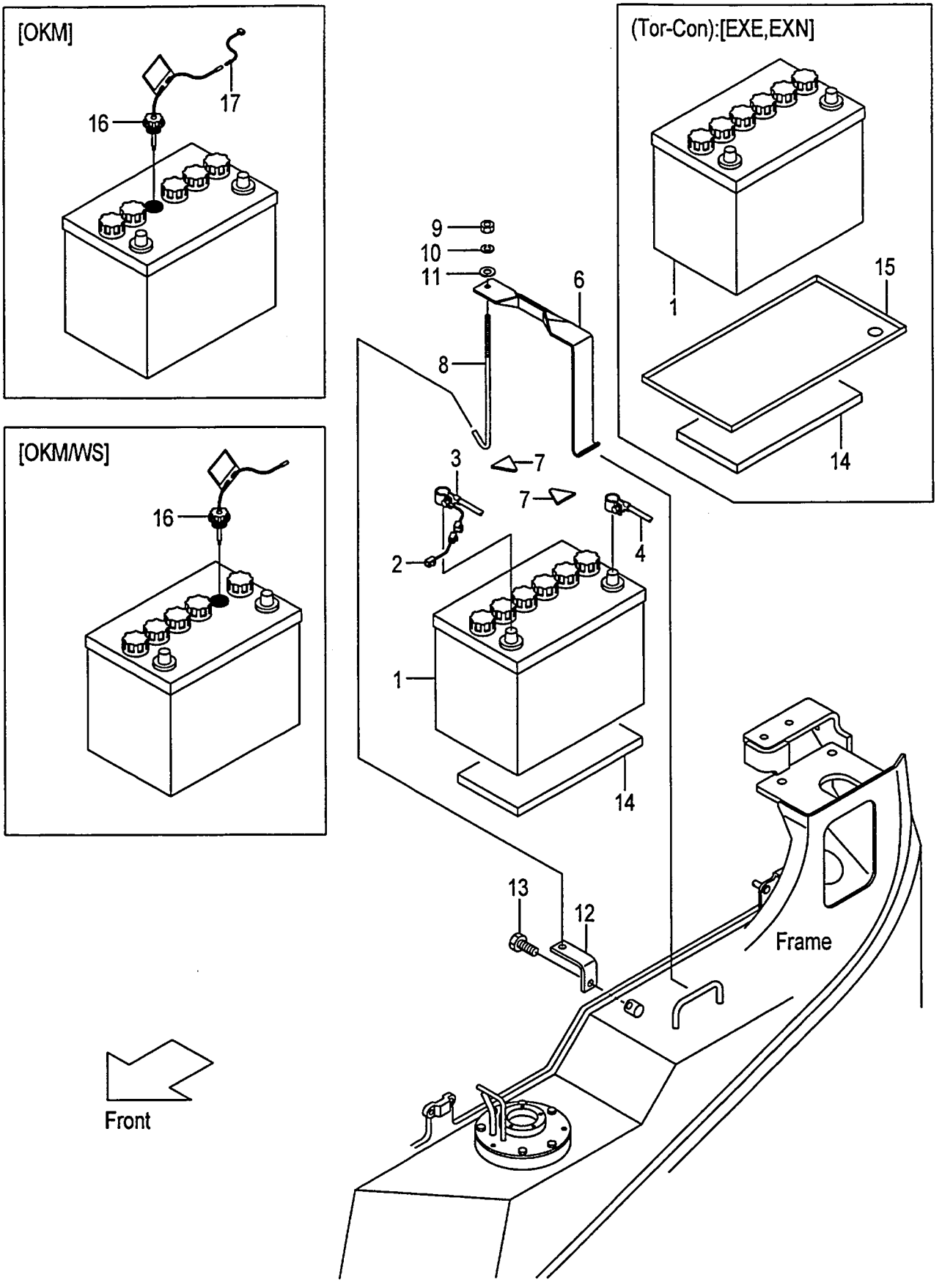

A:FD10C12 FD15C12 FD18C12
B:FD10T12 FD15T12 FD18T12

FIG.15
(F6012480)

Item No	Part No.	Mark	Description		Req'd	Remarks : Serial No.
1	217G2-42051		BATTERY,WET,65D23R	ﾊﾞｯﾃﾘ	1	
-	534A7-02001		BATTERY,WET,115D31R	ﾊﾞｯﾃﾘ	1	[WS]
2	25592-42081		WIRE,FUSIBLE-LINK	ﾜｲﾔ	1	
3	217G2-42151		CABLE,BATTERY(+)	ｹｰﾌﾞﾙ	1	
4	238A2-42151		CABLE,BATTERY(-)	ｹｰﾌﾞﾙ	1	
-	538G3-82201		CABLE,BATTERY(-)	ｹｰﾌﾞﾙ	1	B [EXE][EXN]
5	530C3-82361	+	TERMINAL,BATTERY	ﾀｰﾐﾅﾙ	1	B [EXE][EXN]
6	217G2-42021		HOLDER,BATTERY	ﾎﾙﾀﾞ	1	
7	216G2-43111		RUBBER	ﾗﾊﾞｰ	2	
8	256A2-42171		BOLT,ANCHOR	ﾎﾞﾙﾄ	1	
9	01420-00006		NUT	ﾅｯﾄ	1	
10	02010-00006		WASHER	ﾜｯｼｬ	1	
11	23452-42181		WASHER	ﾜｯｼｬ	1	
12	239A2-42101		HOOK,ANCHOR-BOLT	ﾌｯｸ	1	
13	01185-08016		BOLT	ﾎﾞﾙﾄ	1	
14	239B2-42301		RUBBER	ﾗﾊﾞｰ	1	
15	539A2-72121		CASE,BATTERY	ｹｰｽ	1	B [EXE][EXN]
16	521A2-42001		CAP,BATTERY	ｷｬｯﾌﾟ	1	[OKM]
-	522A2-42001		CAP,BATTERY	ｷｬｯﾌﾟ	1	[OKM/WS]
17	539A6-22021		WIRE,LEAD	ﾜｲﾔ	1	[OKM](WITHOUT OKM/WS)

FIG.16 FRONT GUARD WIRE HARNESS (CLUTCH)

(F60124K0) フロントガードワイヤハーネス

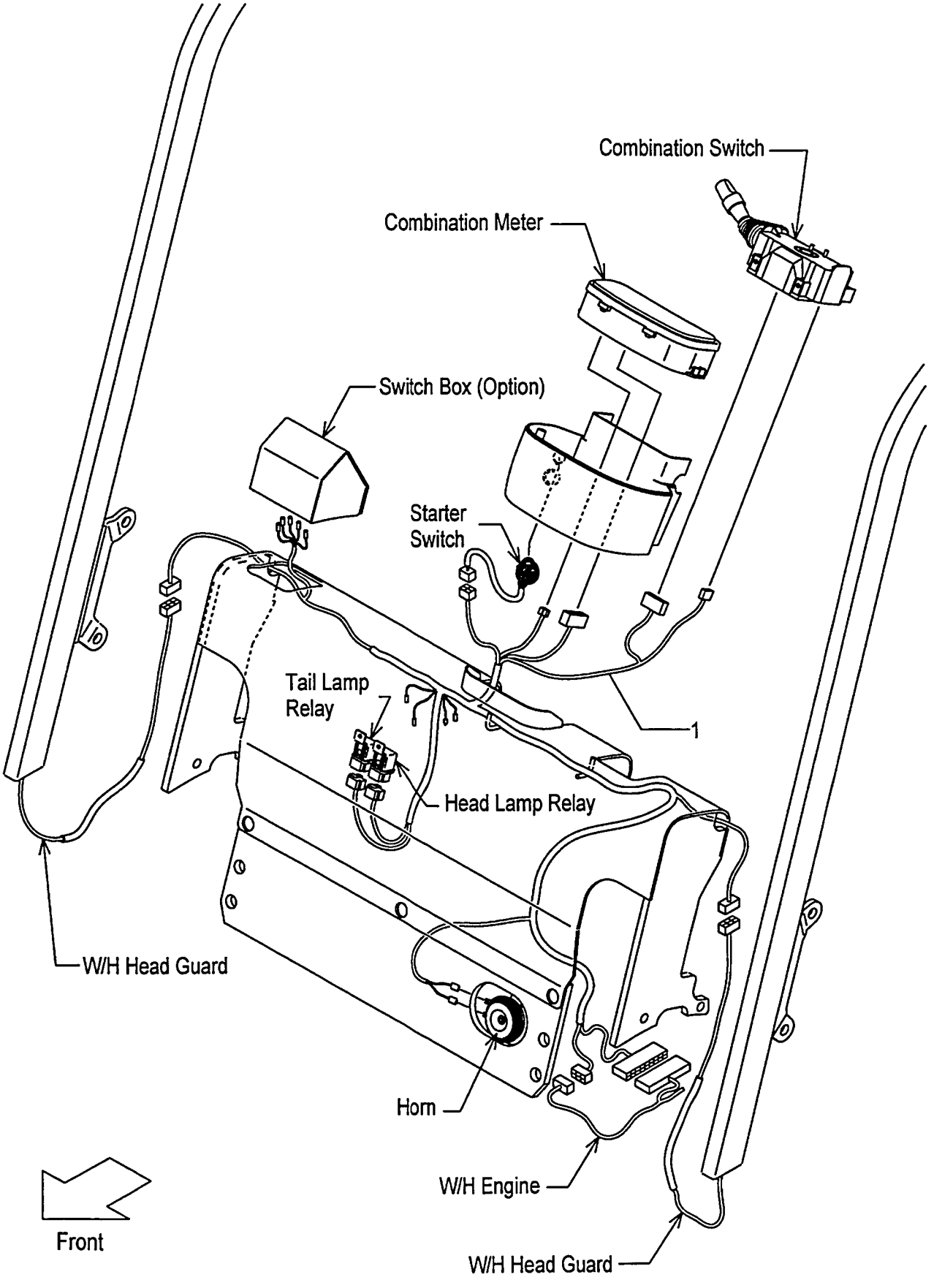

FIG.16
(F60124K0)

A:FD10C12 FD15C12 FD18C12

Item No	Part No.	Mark	Description	Req'd	Remarks : Serial No.
1	239A2-42201		WIRE-HARNESS,F.GUARD ﾜｲﾔﾊｰﾈｽ	1	
-	539A3-72151		WIRE-HARNESS,F.GUARD ﾜｲﾔﾊｰﾈｽ	1	[FC]

FIG.17 FRONT GUARD WIRE HARNESS (TOR-CON)

(F60124L0) ﾌﾛﾝﾄｶﾞｰﾄﾞﾜｲﾔﾊｰﾈｽ

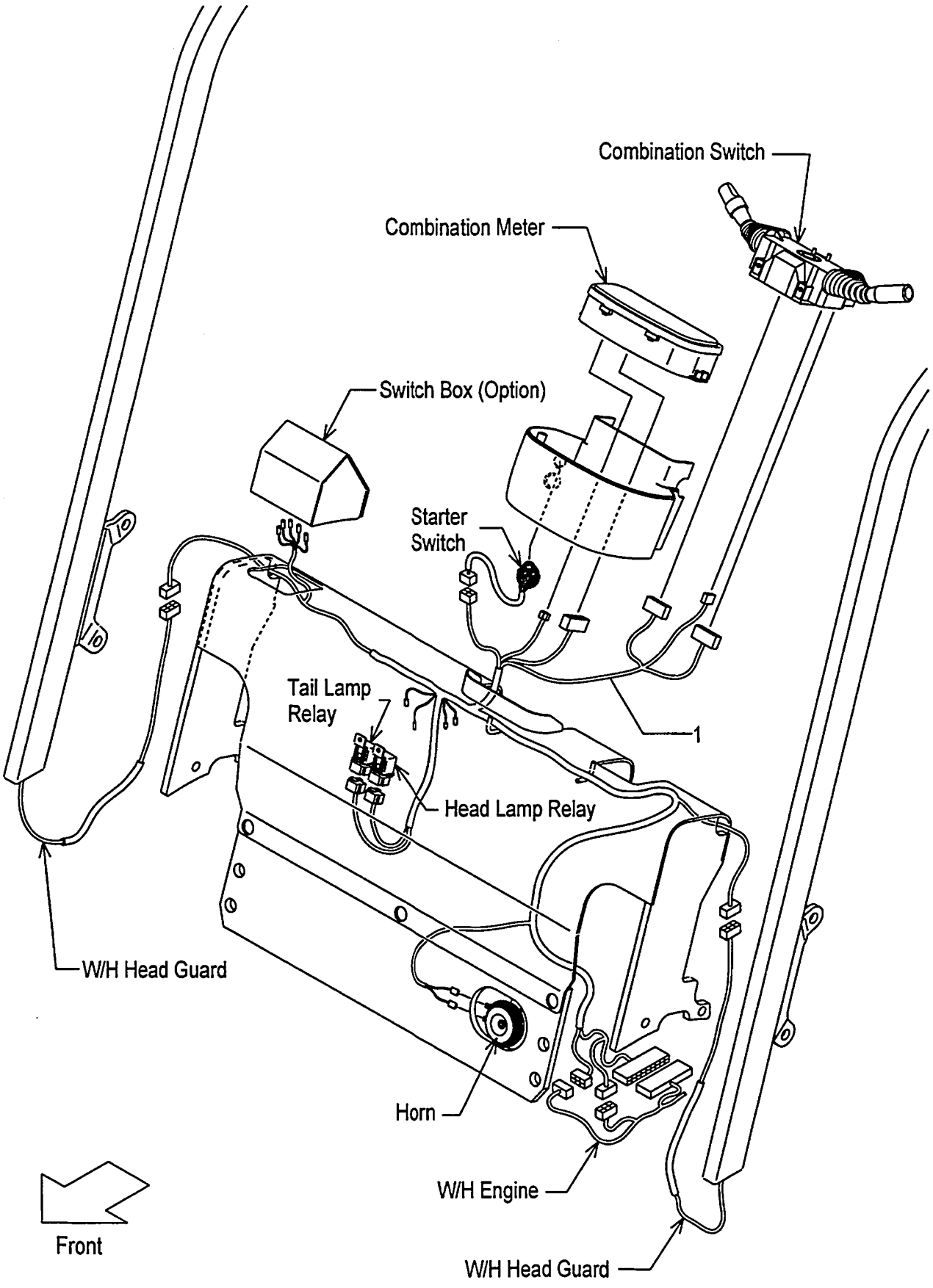

FIG.17
(F60124L0)

A:FD10T12 FD15T12 FD18T12

Item No	Part No.	Mark	Description	Req'd	Remarks : Serial No.
1	239B2-42201		WIRE-HARNESS,F.GUARD ﾜｲﾔﾊｰﾈｽ	1	
-	539B2-32201		WIRE-HARNESS,F.GUARD ﾜｲﾔﾊｰﾈｽ	1	[LCR]
-	539B3-72151		WIRE-HARNESS,F.GUARD ﾜｲﾔﾊｰﾈｽ	1	[FC]
-	539B3-72201		WIRE-HARNESS,F.GUARD ﾜｲﾔﾊｰﾈｽ	1	[FC/LCR]
-	539B3-82301		WIRE-HARNESS,F.GUARD ﾜｲﾔﾊｰﾈｽ	1	[EXE][EXN]

FIG.18 ENGINE WIRE HARNESS (CLUTCH)

(F60124P0) エンジンワイヤハーネス

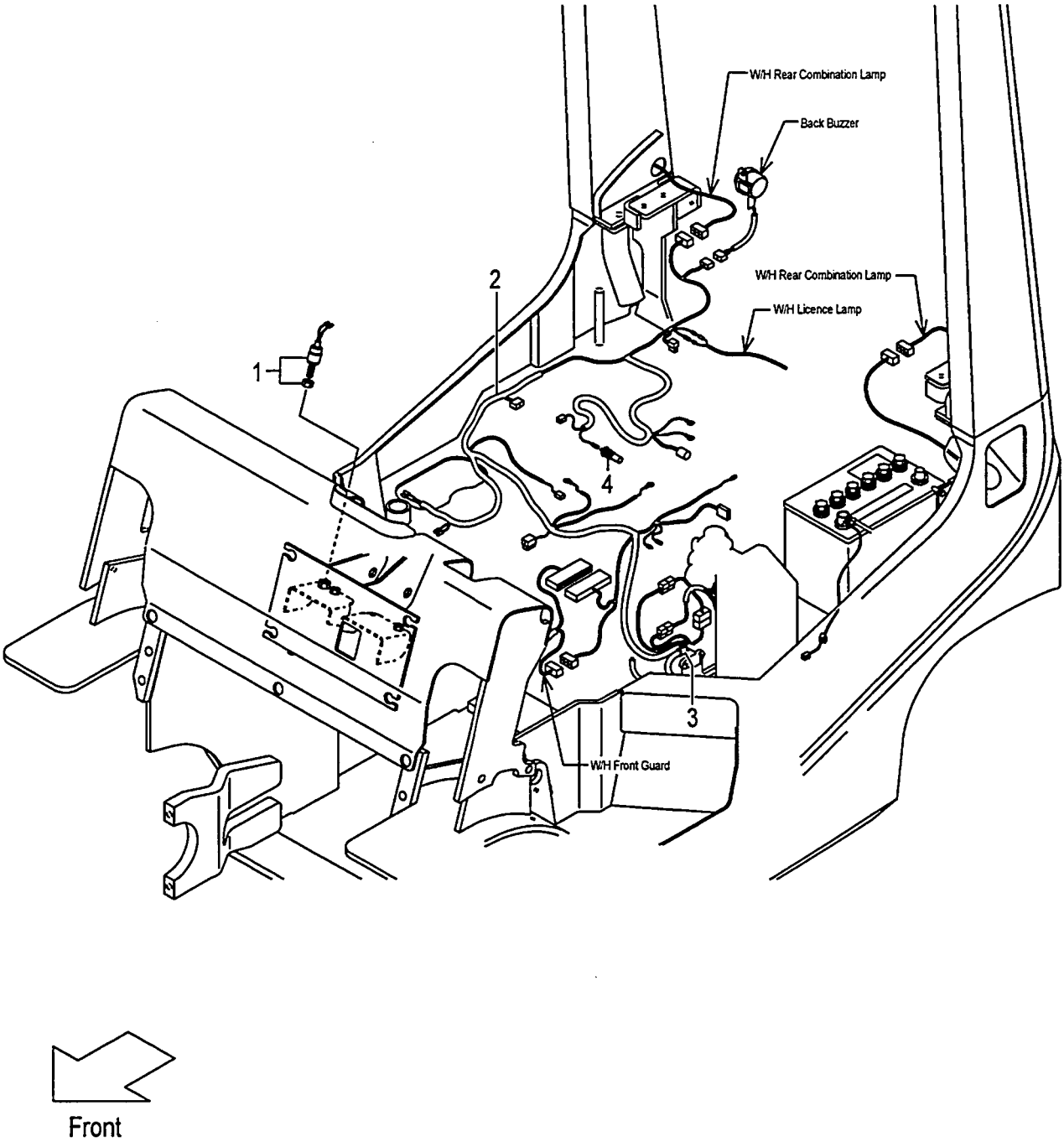

FIG.18
(F60124P0)

A:FD10C12 FD15C12 FD18C12

Item No	Part No.	Mark	Description	Req'd	Remarks : Serial No.
1	23232-42072		SWITCH,STOP-LAMP スイッチ	1	
2	241G2-42001		WIRE-HARNESS,ENGINE ワイヤハーネス	1	
-	541G3-72001		WIRE-HARNESS,ENGINE ワイヤハーネス	1	[FC]
3	214A2-42331		CLIP クリップ゜	3	
4	241G2-42121		UNIT,SENDING ユニット	1	

FIG.19 ENGINE WIRE HARNESS (TOR-CON)

(F60124Q0) エンジンワイヤハーネス

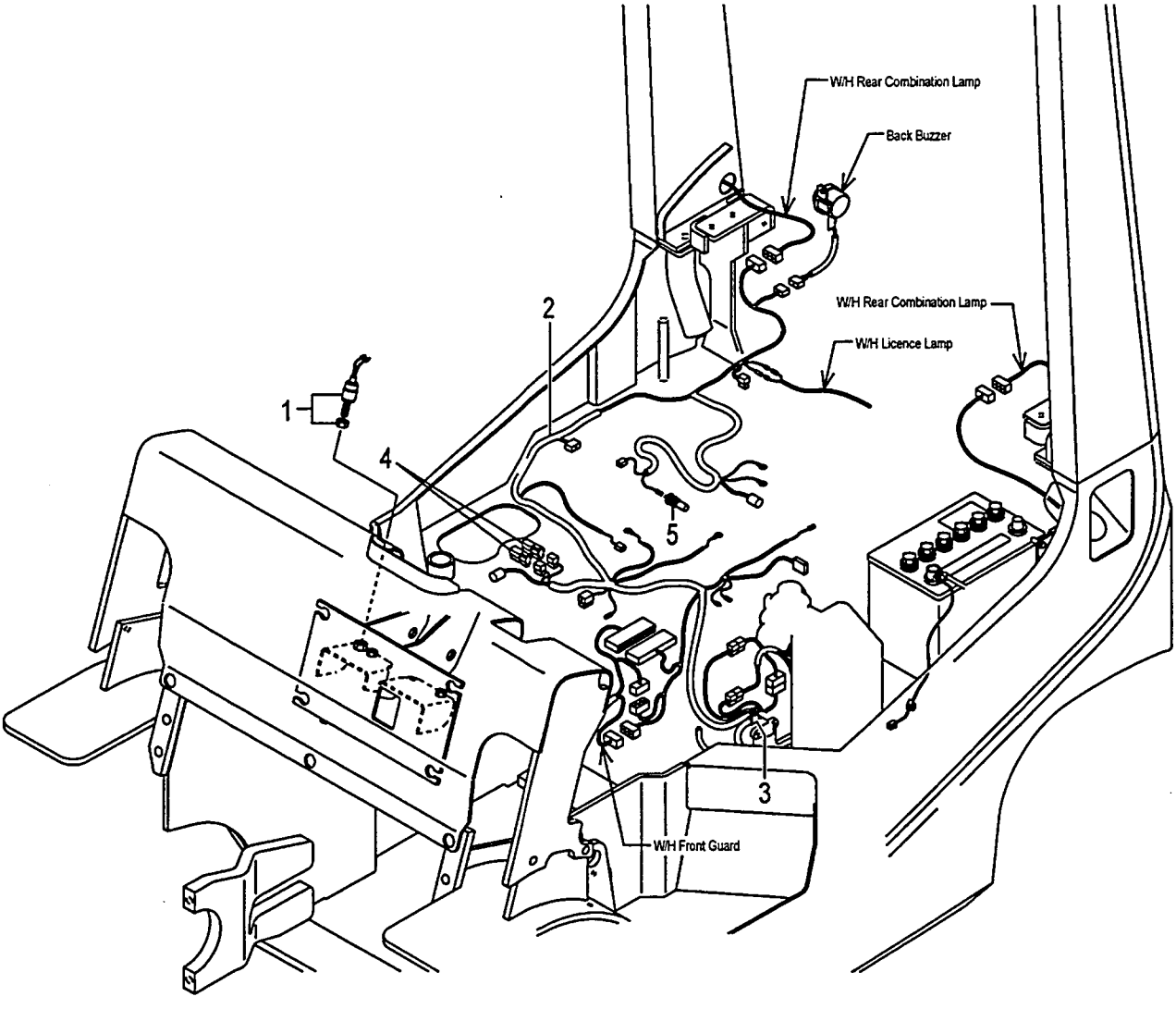

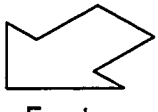

Front

FIG.19
(F60124Q0)

A:FD10T12 FD15T12 FD18T12

Item No	Part No.	Mark	Description		Req'd	Remarks : Serial No.
1	23232-42072		SWITCH,STOP-LAMP	ｽｲｯﾁ	1	
2	241H2-42001		WIRE-HARNESS,ENGINE	ﾜｲﾔﾊｰﾈｽ	1	
-	541H3-72001		WIRE-HARNESS,ENGINE	ﾜｲﾔﾊｰﾈｽ	1	[FC]
3	214A2-42331		CLIP	ｸﾘｯﾌﾟ	3	
4	230C2-42201		DIODE,3A	ﾀﾞｲｵｰﾄﾞ	2	
5	241G2-42121		UNIT,SENDING	ﾕﾆｯﾄ	1	

FIG.20 BACK BUZZER

(F60124F0) ﾊﾞｯｸﾌﾞｻﾞｰ

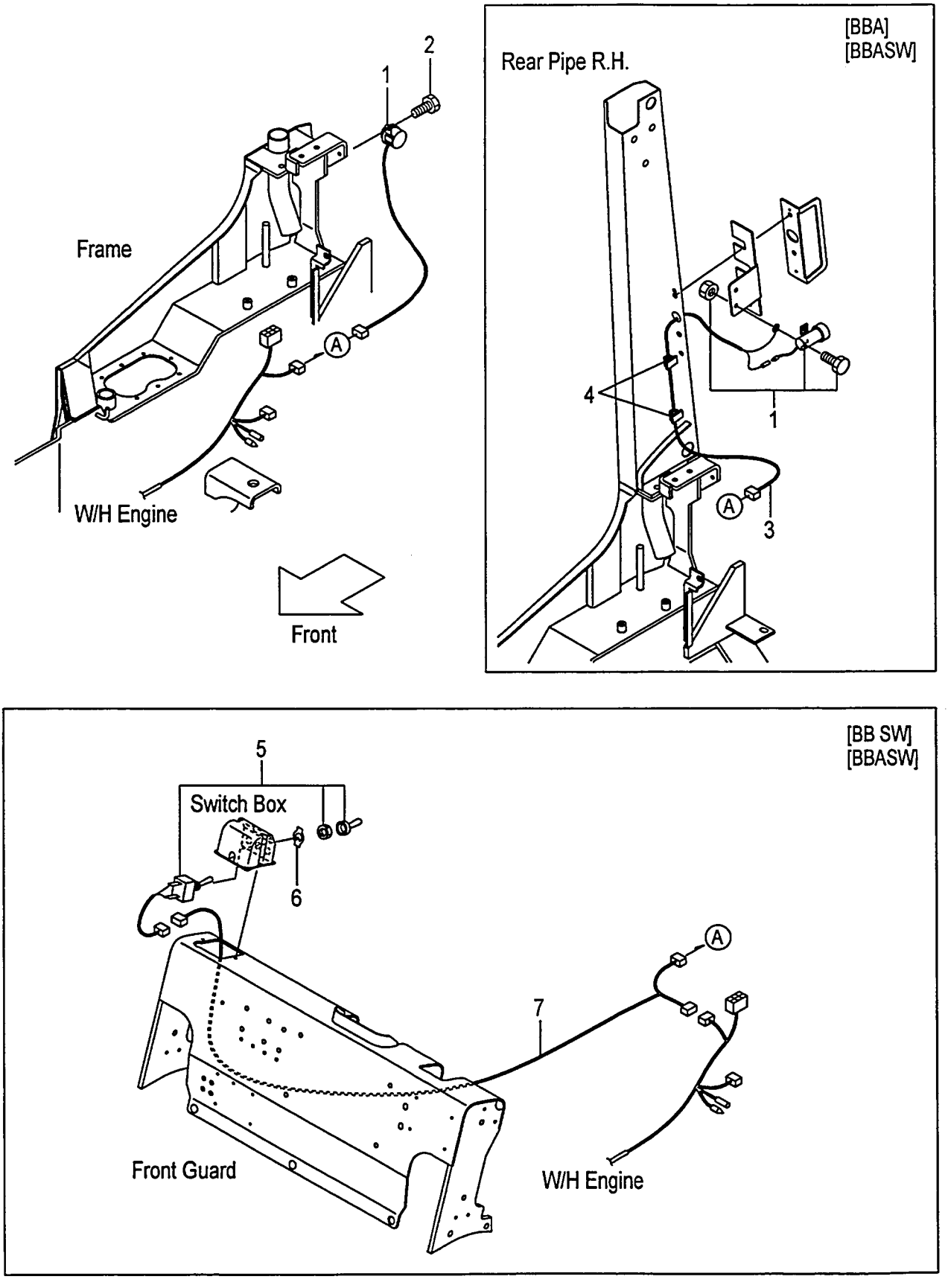

FIG.20
(F60124F0)

A:FD10C12 FD10T12 FD15C12 FD15T12 FD18C12 FD18T12

Item No	Part No.	Mark	Description		Req'd	Remarks : Serial No.
1	234A2-42301		BUZZER,BACK,12V	ﾌﾞｻﾞｰ	1	
-	214A2-44001		BUZZER,BACK,12V	ﾌﾞｻﾞｰ	1	[BBA][BBASW]
2	01185-08016		BOLT	ﾎﾞﾙﾄ	1	(WITHOUT BBA,BBASW)
3	516G1-32012		WIRE,LEAD	ﾜｲﾔ	1	[BBA][BBASW]
4	27732-42311		CLAMP,HARNESS	ｸﾗﾝﾌﾟ	2	[BBA][BBASW]
5	57042-72091		SWITCH	ｽｲｯﾁ	1	[BB SW][BBASW]
6	27652-62211		PLATE,SWITCH	ﾌﾟﾚｰﾄ	1	[BB SW][BBASW]
7	516G1-32002		WIRE,LEAD	ﾜｲﾔ	1	[BB SW][BBASW]

FIG.21 LIGHT UNIT

(F6012490) ライトユニット

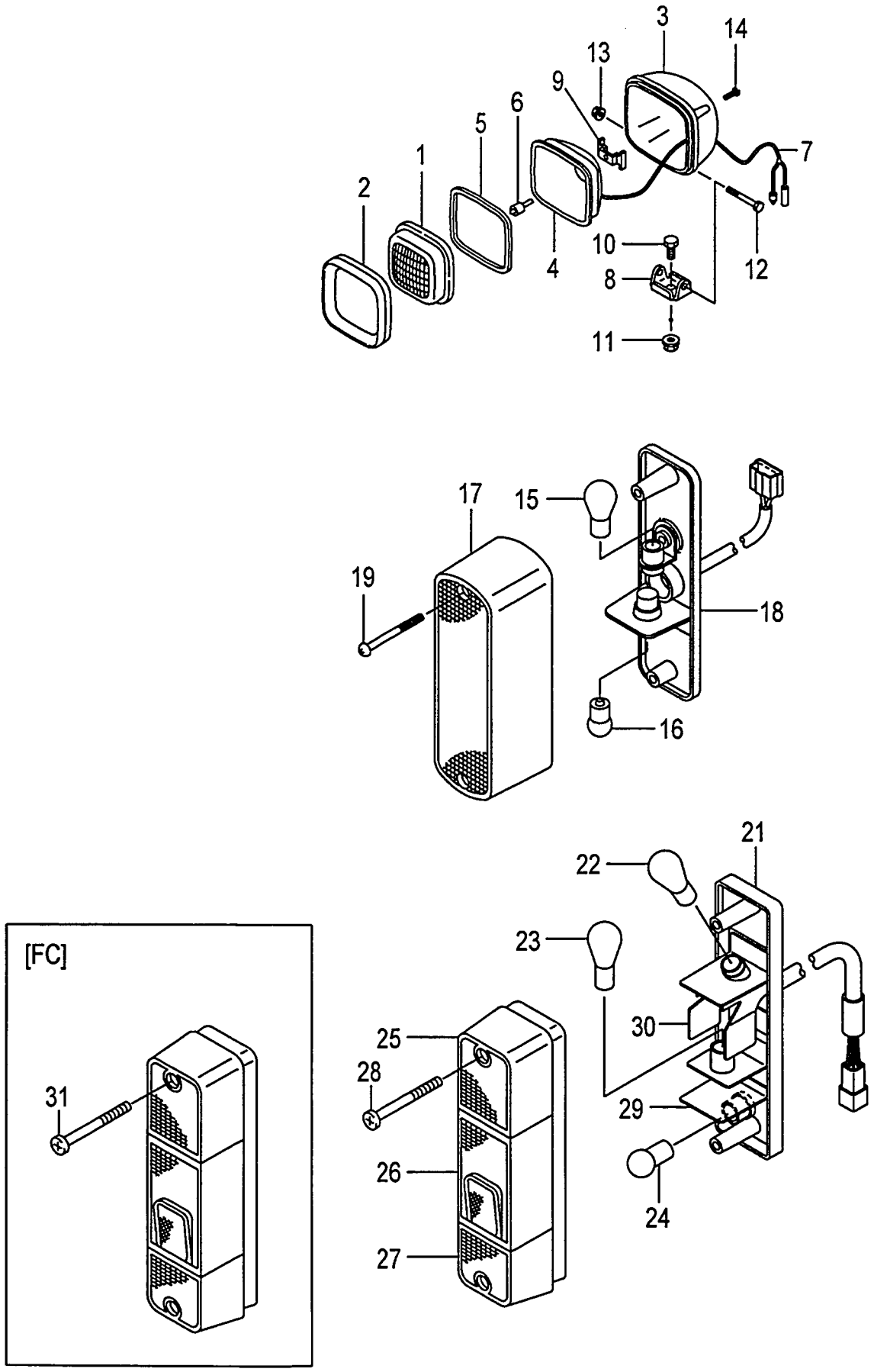

FIG.21
(F6012490)

A:FD10C12 FD10T12 FD15C12 FD15T12 FD18C12 FD18T12

Item No	Part No.	Mark	Description		Req'd	Remarks : Serial No.
A1	216G2-40602		LAMP-ASSY,HEAD	ﾍｯﾄﾞﾗﾝﾌﾟｱｯｾﾝ	2	INC.1-14
1	216G2-43502		LENS	ﾚﾝｽﾞ	2	
2	216G2-43631		RIM	ﾘﾑ	2	
3	NO PART NO.	#	HOUSING	ﾊｳｼﾞﾝｸﾞ	2	
4	NO PART NO.	#	REFLECTOR	ﾘﾌﾚｸﾀ	2	
5	216G2-43531		GASKET	ｶﾞｽｹｯﾄ	2	
6	216G2-43542		BULB,12V/55W	ﾊﾞﾙﾌﾞ	2	
7	216G2-43551		WIRE,LEAD	ﾜｲﾔ	2	
8	216G2-43562		BRACKET	ﾌﾞﾗｹｯﾄ	2	
9	216G2-43571		SPRING	ｽﾌﾟﾘﾝｸﾞ	2	
10	216G2-43582		BOLT	ﾎﾞﾙﾄ	2	
11	216G2-43592		NUT	ﾅｯﾄ	2	
12	216G2-43602		BOLT	ﾎﾞﾙﾄ	2	
13	216G2-43611		NUT	ﾅｯﾄ	2	
14	216G2-43622		SCREW	ｽｸﾘｭ	8	
A2	216G2-40701		LAMP-ASSY,F-COMBINATION	ﾗﾝﾌﾟｱｯｾﾝ	2	INC.15-19
15	216G2-40711		BULB,12V/27W	ﾊﾞﾙﾌﾞ	2	
16	216G2-40721		BULB,12V/10W	ﾊﾞﾙﾌﾞ	2	
17	216G2-40731		LENS	ﾚﾝｽﾞ	2	
18	NO PART NO.	#	BODY	ﾎﾞﾃﾞｨ	2	
19	NO PART NO.		SCREW	ｽｸﾘｭ	4	
20	239A2-42221	+	WIRE-HARNESS,H.GUARD	ﾜｲﾔﾊｰﾈｽ	2	
-	534A9-22211	+	WIRE-HARNESS,H.GUARD	ﾜｲﾔﾊｰﾈｽ	2	[HL][BKH]
A3	214A2-40203		LAMP-ASSY,R-COMBINATION	ﾗﾝﾌﾟｱｯｾﾝ	2	INC.21-30
21	NO PART NO.	#	BODY	ﾎﾞﾃﾞｨ	2	
22	210F2-42011		BULB,12V/23W	ﾊﾞﾙﾌﾞ	2	
23	210F2-42021		BULB,12V/23,8W	ﾊﾞﾙﾌﾞ	2	
24	210F2-42031		BULB,12V/10W	ﾊﾞﾙﾌﾞ	2	
25	210F2-42201		LENS,PLASTIC	ﾚﾝｽﾞ	2	
26	210F2-42211		LENS,PLASTIC	ﾚﾝｽﾞ	2	
27	210F2-42221		LENS,PLASTIC	ﾚﾝｽﾞ	2	
28	01030-05065		SCREW	ｽｸﾘｭ	4	(WITHOUT FC)
29	210F2-42231		SHADE	ｼｪｰﾄﾞ	2	
30	214A2-44511		SHADE	ｼｪｰﾄﾞ	2	
31	514A3-72091		BOLT,PAN-HEAD	ﾎﾞﾙﾄ	4	[FC]

FIG.22 LICENSE LIGHT

(F60124A0) ライセンスライト

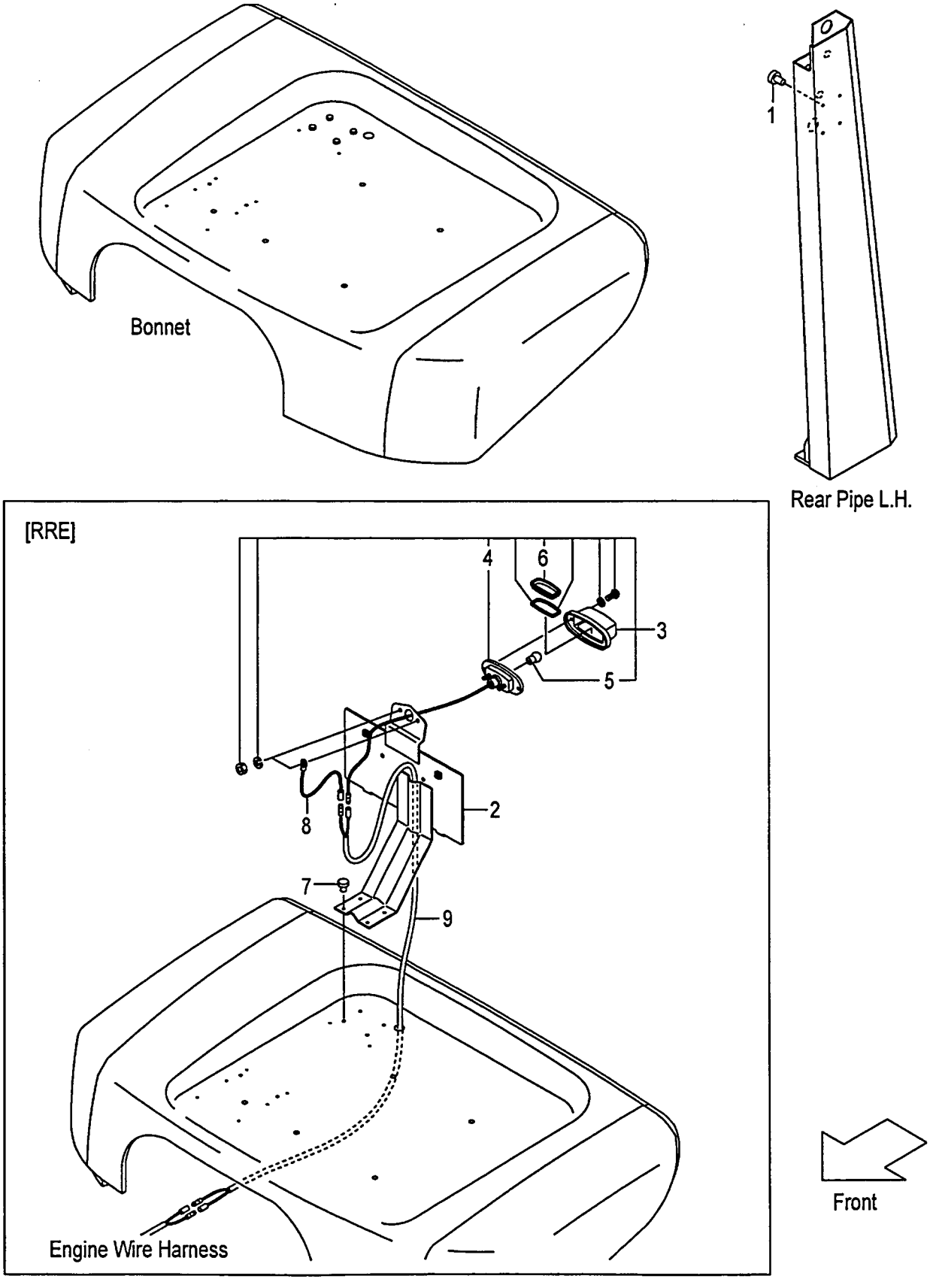

FIG.22
(F60124A0)

A:FD10C12 FD10T12 FD15C12 FD15T12 FD18C12 FD18T12

Item No	Part No.	Mark	Description		Req'd	Remarks : Serial No.
1	25596-42361		RIVET,NYLON	ﾘﾍﾞｯﾄ	4	
-	25596-42361		RIVET,NYLON	ﾘﾍﾞｯﾄ	4	[RRE]
2	539A9-92101		BRACKET,NUMBER-PLATE	ﾌﾞﾗｹｯﾄ	1	[RRE]
3	22132-40202		LAMP,LICENCE	ﾗﾝﾌﾟ	1	[RRE] INC.4-6
4	NO PART NO.	#	BODY	ﾎﾞﾃﾞｨ	1	[RRE]
5	22132-40041		BULB,12V/10W	ﾊﾞﾙﾌﾞ	1	[RRE]
6	22192-42411		LENS,PLASTIC	ﾚﾝｽﾞ	1	[RRE]
7	22256-42001		RIVET	ﾘﾍﾞｯﾄ	4	[RRE]
8	222A2-42511		WIRE,LEAD	ﾜｲﾔ	1	[RRE]
9	558A9-92001		WIRE-HARNESS,LICENCE-LIGHT	ﾜｲﾔﾊｰﾈｽ	1	[RRE]

FIG.23 LICENSE LIGHT [TUE/RRE]

(F60124R0) ライセンスライト

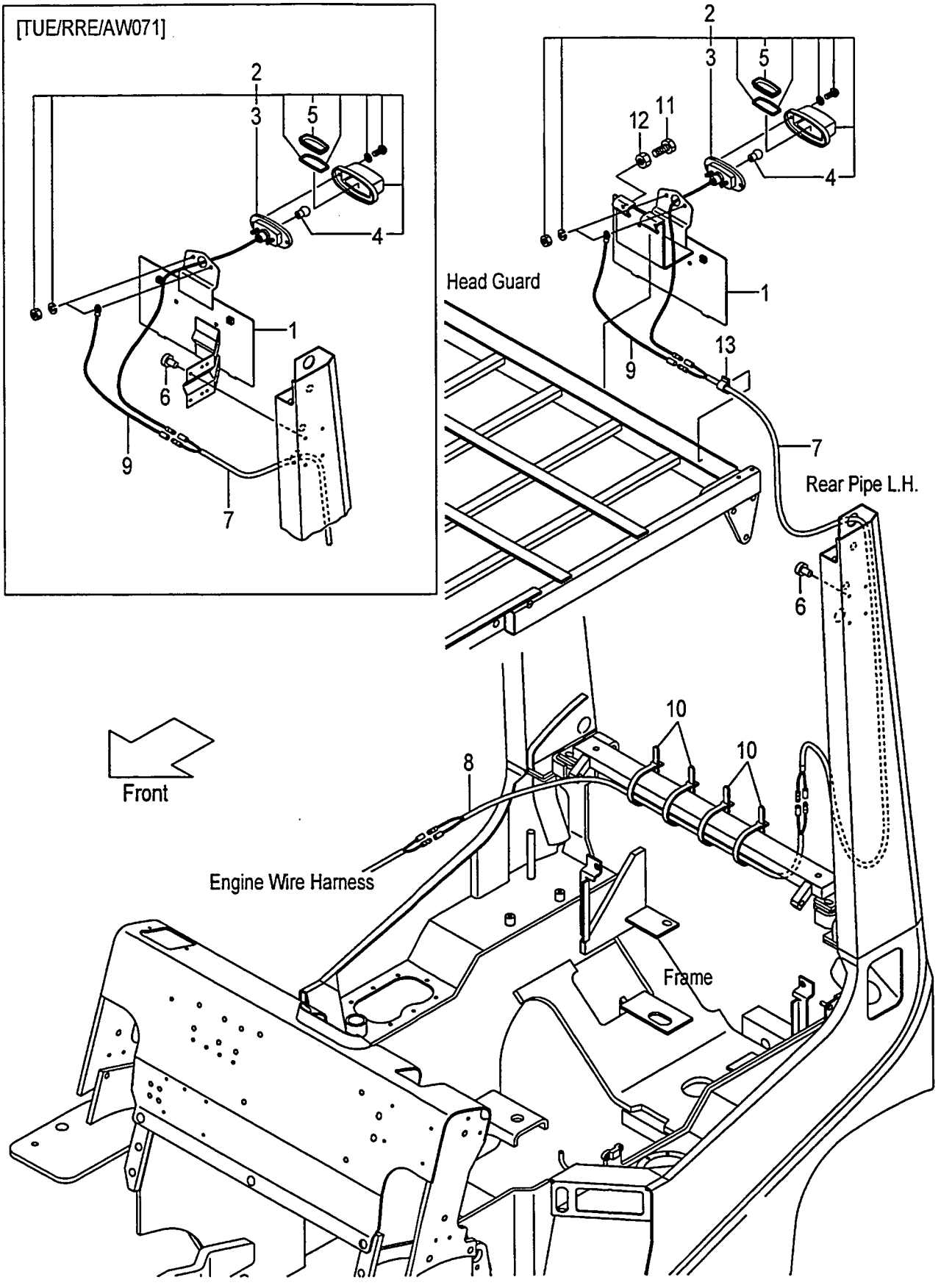

A:FD10C12 FD10T12 FD15C12 FD15T12 FD18C12 FD18T12

Item No	Part No.	Mark	Description	Req'd	Remarks : Serial No.
1	533A0-52051		BRACKET,NUMBER-PLATE ﾌﾞﾗｹｯﾄ	1	[TUE/RRE]
-	509P9-90101		BRACKET,NUMBER-PLATE ﾌﾞﾗｹｯﾄ	1	[TUE/RRE/AW071]
2	22132-40202		LAMP,LICENCE ﾗﾝﾌﾟ	1	[TUE/RRE] INC.3-5
3	NO PART NO.	#	BODY ﾎﾞﾃﾞｨ	1	[TUE/RRE]
4	22132-40041		BULB,12V/10W ﾊﾞﾙﾌﾞ	1	[TUE/RRE]
5	22192-42411		LENS,PLASTIC ﾚﾝｽﾞ	1	[TUE/RRE]
6	25596-42361		RIVET,NYLON ﾘﾍﾞｯﾄ	4	[TUE/RRE]
-	22256-42001		RIVET ﾘﾍﾞｯﾄ	4	[TUE/RRE/AW071]
7	534A9-92131		WIRE-HARNESS,LICENCE-LIGHT ﾜｲﾔﾊｰﾈｽ	1	[TUE/RRE]
-	516G9-92101		WIRE-HARNESS,LICENCE-LIGHT ﾜｲﾔﾊｰﾈｽ	1	[TUE/RRE/AW071]
8	558A9-92001		WIRE-HARNESS,LICENCE-LIGHT ﾜｲﾔﾊｰﾈｽ	1	[TUE/RRE]
9	222A2-42511		WIRE,LEAD ﾜｲﾔ	1	[TUE/RRE]
10	04913-11120		BAND ﾊﾞﾝﾄﾞ	4	[TUE/RRE]
11	01100-08020		BOLT ﾎﾞﾙﾄ	3	[TUE/RRE] (WITHOUT TUE/RRE/AW071)
12	01400-00008		NUT ﾅｯﾄ	3	[TUE/RRE] (WITHOUT TUE/RRE/AW071)
13	27732-42311		CLAMP,HARNESS ｸﾗﾝﾌﾟ	1	[TUE/RRE] (WITHOUT TUE/RRE/AW071)

FIG.24 REAR WORKING LIGHT [RWLR]

(F60124B0) リヤーワーキング゛ライト

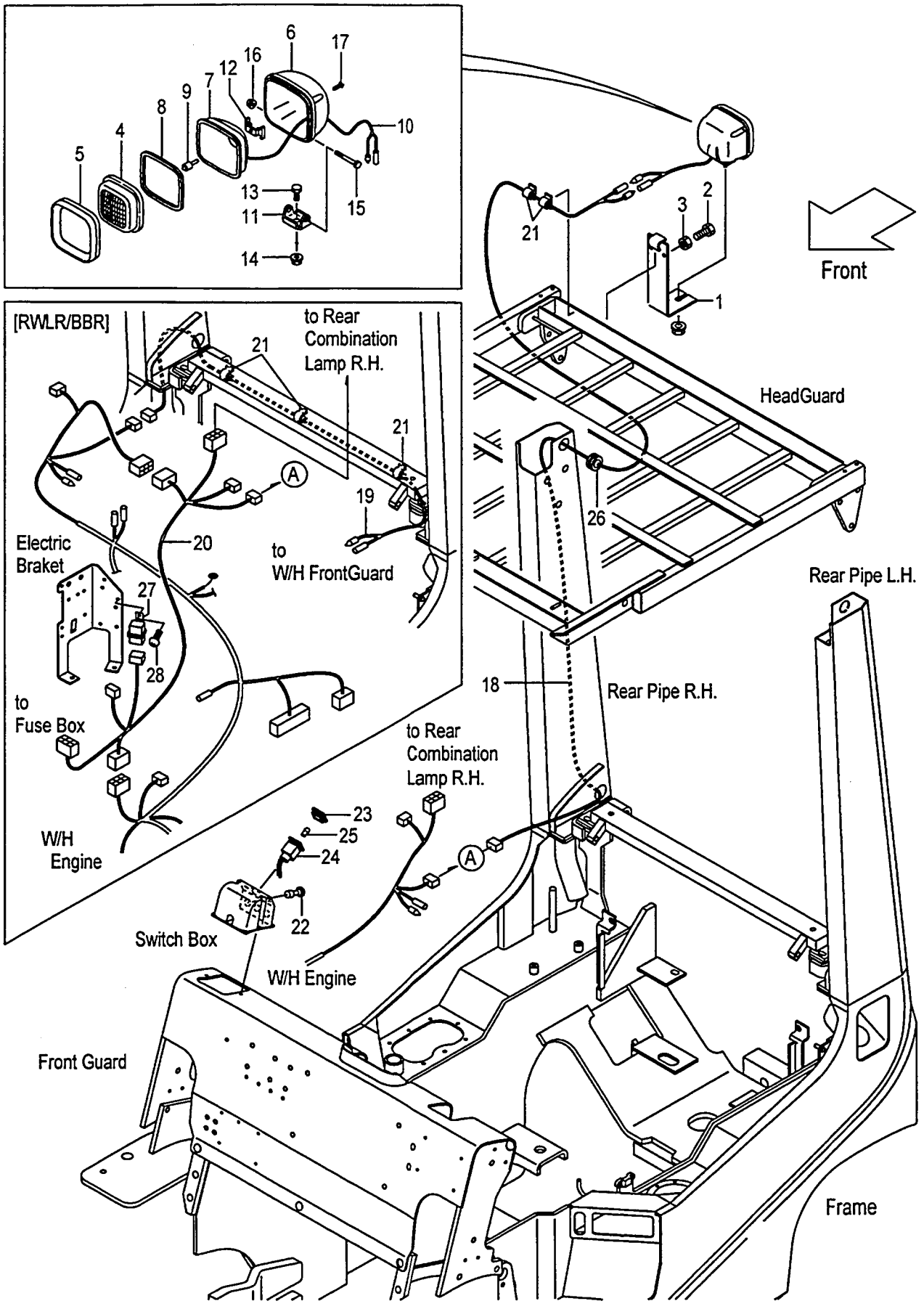

A:FD10C12 FD10T12 FD15C12 FD15T12 FD18C12 FD18T12

Item No	Part No.	Mark	Description		Req'd	Remarks : Serial No.
1	516G1-42151		BRACKET,REAR-LAMP	ﾌﾞﾗｹｯﾄ	1	[RWLR]
-	539A1-42201		BRACKET,REAR-LAMP	ﾌﾞﾗｹｯﾄ	1	[RWLR/AW061]
2	01100-08020		BOLT	ﾎﾞﾙﾄ	3	[RWLR]
3	01400-00008		NUT	ﾅｯﾄ	3	[RWLR]
A1	216G2-40602		LAMP-ASSY,HEAD	ﾍｯﾄﾞﾗﾝﾌﾟｱｯｾﾝ	1	[RWLR] INC.4-17
4	216G2-43502		LENS	ﾚﾝｽﾞ	1	[RWLR]
5	216G2-43631		RIM	ﾘﾑ	1	[RWLR]
6	NO PART NO.	#	HOUSING	ﾊｳｼﾞﾝｸﾞ	1	[RWLR]
7	NO PART NO.	#	REFLECTOR	ﾘﾌﾚｸﾀ	1	[RWLR]
8	216G2-43531		GASKET	ｶﾞｽｹｯﾄ	1	[RWLR]
9	216G2-43542		BULB,12V/55W	ﾊﾞﾙﾌﾞ	1	[RWLR]
10	216G2-43551		WIRE,LEAD	ﾜｲﾔ	1	[RWLR]
11	216G2-43562		BRACKET	ﾌﾞﾗｹｯﾄ	1	[RWLR]
12	216G2-43571		SPRING	ｽﾌﾟﾘﾝｸﾞ	1	[RWLR]
13	216G2-43582		BOLT	ﾎﾞﾙﾄ	1	[RWLR]
14	216G2-43592		NUT	ﾅｯﾄ	1	[RWLR]
15	216G2-43602		BOLT	ﾎﾞﾙﾄ	1	[RWLR]
16	216G2-43611		NUT	ﾅｯﾄ	1	[RWLR]
17	216G2-43622		SCREW	ｽｸﾘｭ	4	[RWLR]
18	516G1-42101		WIRE,LEAD	ﾜｲﾔ	1	[RWLR]
19	516G1-42111		WIRE,LEAD	ﾜｲﾔ	1	[RWLR/BBR]
20	539A8-92111		WIRE,LEAD	ﾜｲﾔ	1	[RWLR/BBR]
21	27732-42311		CLAMP,HARNESS	ｸﾗﾝﾌﾟ	2	[RWLR]
-	27732-42311		CLAMP,HARNESS	ｸﾗﾝﾌﾟ	5	[RWLR/BBR]
22	22672-42501		SWITCH,LAMP	ｽｲｯﾁ	1	[RWLR]
A2	522A1-42051		LAMP-ASSY,PILOT	ﾊﾟｲﾛｯﾄﾗﾝﾌﾟｱｯｾﾝ	1	[RWLR] INC.23-25
23	522A1-42061		LENS	ﾚﾝｽﾞ	1	[RWLR]
24	NO PART NO.	#	HOLDER	ﾎﾙﾀﾞ	1	[RWLR]
25	23302-42311		BULB,12V/3.4W	ﾊﾞﾙﾌﾞ	1	[RWLR]
26	22679-47301		GROMMET	ｸﾞﾛﾒｯﾄ	1	[RWLR]
27	26062-42881		RELAY,12V	ﾘﾚｰ	1	[RWLR/BBR]
28	214A2-42611		SCREW	ｽｸﾘｭ	1	[RWLR/BBR]

FIG.25 REAR WORKING LIGHT [RWLL]

(F60124C0) リヤーワーキング゛ライト

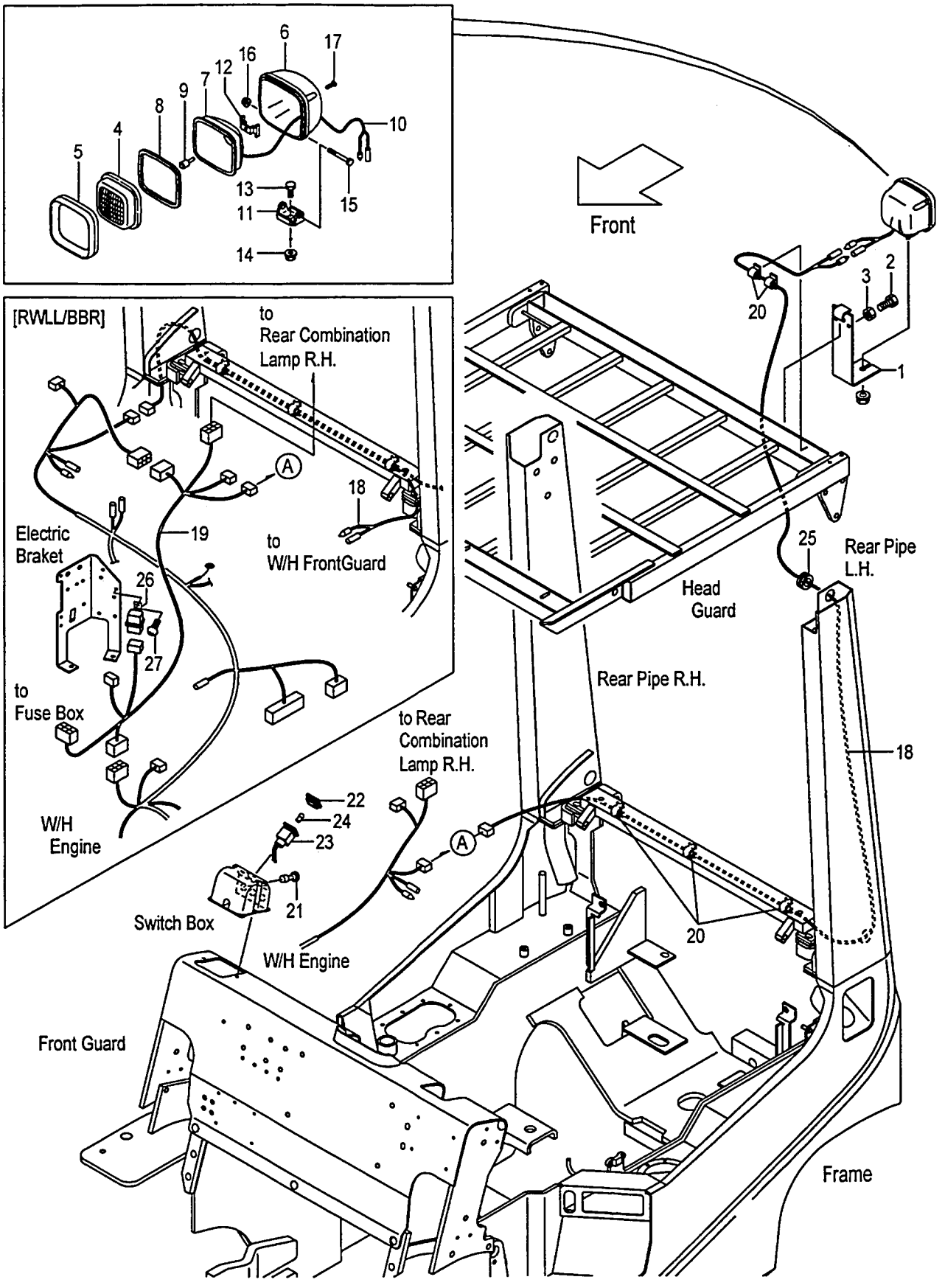

A:FD10C12 FD10T12 FD15C12 FD15T12 FD18C12 FD18T12

Item No	Part No.	Mark	Description		Req'd	Remarks : Serial No.
1	516G1-42151		BRACKET,REAR-LAMP	ﾌﾞﾗｹｯﾄ	1	[RWLL]
-	539A1-42201		BRACKET,REAR-LAMP	ﾌﾞﾗｹｯﾄ	1	[RWLL/AW061]
2	01100-08020		BOLT	ﾎﾞﾙﾄ	3	[RWLL]
3	01400-00008		NUT	ﾅｯﾄ	3	[RWLL]
A1	216G2-40602		LAMP-ASSY,HEAD	ﾍｯﾄﾞﾗﾝﾌﾟｱｯｾﾝ	1	[RWLL] INC.4-17
4	216G2-43502		LENS	ﾚﾝｽﾞ	1	[RWLL]
5	216G2-43631		RIM	ﾘﾑ	1	[RWLL]
6	NO PART NO.	#	HOUSING	ﾊｳｼﾞﾝｸﾞ	1	[RWLL]
7	NO PART NO.	#	REFLECTOR	ﾘﾌﾚｸﾀ	1	[RWLL]
8	216G2-43531		GASKET	ｶﾞｽｹｯﾄ	1	[RWLL]
9	216G2-43542		BULB,12V/55W	ﾊﾞﾙﾌﾞ	1	[RWLL]
10	216G2-43551		WIRE,LEAD	ﾜｲﾔ	1	[RWLL]
11	216G2-43562		BRACKET	ﾌﾞﾗｹｯﾄ	1	[RWLL]
12	216G2-43571		SPRING	ｽﾌﾟﾘﾝｸﾞ	1	[RWLL]
13	216G2-43582		BOLT	ﾎﾞﾙﾄ	1	[RWLL]
14	216G2-43592		NUT	ﾅｯﾄ	1	[RWLL]
15	216G2-43602		BOLT	ﾎﾞﾙﾄ	1	[RWLL]
16	216G2-43611		NUT	ﾅｯﾄ	1	[RWLL]
17	216G2-43622		SCREW	ｽｸﾘｭ	4	[RWLL]
18	516G1-42111		WIRE,LEAD	ﾜｲﾔ	1	[RWLL]
-	516G1-42111		WIRE,LEAD	ﾜｲﾔ	2	[RWLL/BBR]
19	539A8-92111		WIRE,LEAD	ﾜｲﾔ	1	[RWLL/BBR]
20	27732-42311		CLAMP,HARNESS	ｸﾗﾝﾌﾟ	5	[RWLL]
21	22672-42501		SWITCH,LAMP	ｽｲｯﾁ	1	[RWLL]
A2	522A1-42051		LAMP-ASSY,PILOT	ﾊﾟｲﾛｯﾄﾗﾝﾌﾟｱｯｾﾝ	1	[RWLL] INC.22-24
22	522A1-42061		LENS	ﾚﾝｽﾞ	1	[RWLL]
23	NO PART NO.	#	HOLDER	ﾎﾙﾀﾞ	1	[RWLL]
24	23302-42311		BULB,12V/3.4W	ﾊﾞﾙﾌﾞ	1	[RWLL]
25	22679-47301		GROMMET	ｸﾞﾛﾒｯﾄ	1	[RWLL]
26	26062-42881		RELAY,12V	ﾘﾚｰ	1	[RWLL/BBR]
27	214A2-42611		SCREW	ｽｸﾘｭ	1	[RWLL/BBR]

FIG.26 REAR WORKING LIGHT [RWL2]

(F60124D0) リヤーワーキング゛ライト

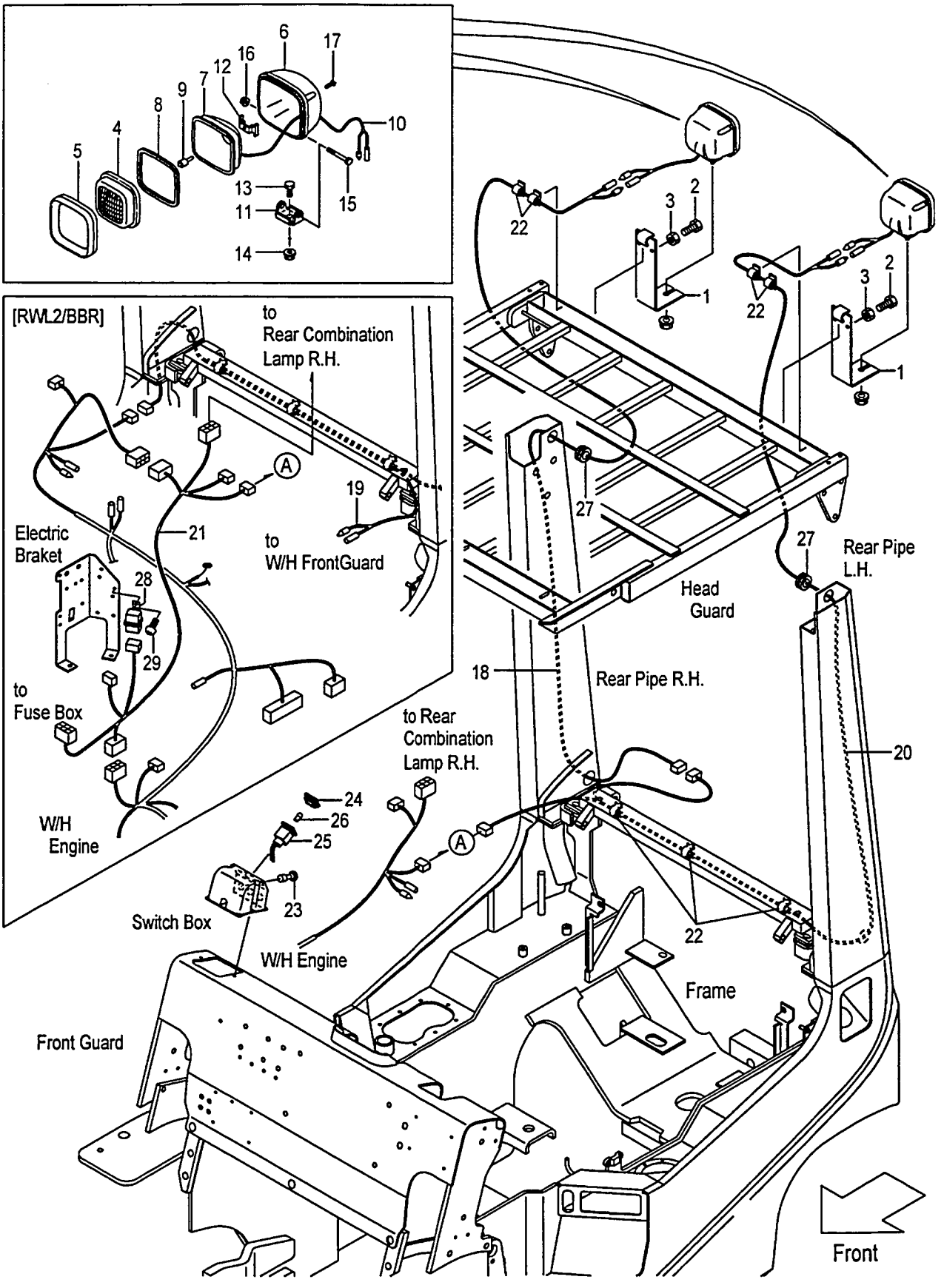

A:FD10C12 FD10T12 FD15C12 FD15T12 FD18C12 FD18T12

Item No	Part No.	Mark	Description		Req'd	Remarks : Serial No.
1	516G1-42151		BRACKET,REAR-LAMP	ﾌﾞﾗｹｯﾄ	2	[RWL2]
-	539A1-42201		BRACKET,REAR-LAMP	ﾌﾞﾗｹｯﾄ	2	[RWL2/AW061]
2	01100-08020		BOLT	ﾎﾞﾙﾄ	6	[RWL2]
3	01400-00008		NUT	ﾅｯﾄ	6	[RWL2]
A1	216G2-40602		LAMP-ASSY,HEAD	ﾍｯﾄﾞﾗﾝﾌﾟｱｯｾﾝ	2	[RWL2] INC.4-17
4	216G2-43502		LENS	ﾚﾝｽﾞ	2	[RWL2]
5	216G2-43631		RIM	ﾘﾑ	2	[RWL2]
6	NO PART NO.	#	HOUSING	ﾊｳｼﾞﾝｸﾞ	2	[RWL2]
7	NO PART NO.	#	REFLECTOR	ﾘﾌﾚｸﾀ	2	[RWL2]
8	216G2-43531		GASKET	ｶﾞｽｹｯﾄ	2	[RWL2]
9	216G2-43542		BULB,12V/55W	ﾊﾞﾙﾌﾞ	2	[RWL2]
10	216G2-43551		WIRE,LEAD	ﾜｲﾔ	2	[RWL2]
11	216G2-43562		BRACKET	ﾌﾞﾗｹｯﾄ	2	[RWL2]
12	216G2-43571		SPRING	ｽﾌﾟﾘﾝｸﾞ	2	[RWL2]
13	216G2-43582		BOLT	ﾎﾞﾙﾄ	2	[RWL2]
14	216G2-43592		NUT	ﾅｯﾄ	2	[RWL2]
15	216G2-43602		BOLT	ﾎﾞﾙﾄ	2	[RWL2]
16	216G2-43611		NUT	ﾅｯﾄ	2	[RWL2]
17	216G2-43622		SCREW	ｽｸﾘｭ	8	[RWL2]
18	516G1-42101		WIRE,LEAD	ﾜｲﾔ	1	[RWL2]
19	516G1-42111		WIRE,LEAD	ﾜｲﾔ	1	[RWL2/BBR]
20	516G1-42121		WIRE,LEAD	ﾜｲﾔ	1	[RWL2]
21	539A8-92111		WIRE,LEAD	ﾜｲﾔ	1	[RWL2/BBR]
22	27732-42311		CLAMP,HARNESS	ｸﾗﾝﾌﾟ	7	[RWL2]
23	22672-42501		SWITCH,LAMP	ｽｲｯﾁ	1	[RWL2]
A2	522A1-42051		LAMP-ASSY,PILOT	ﾊﾟｲﾛｯﾄﾗﾝﾌﾟｱｯｾﾝ	1	[RWL2] INC.24-26
24	522A1-42061		LENS	ﾚﾝｽﾞ	1	[RWL2]
25	NO PART NO.	#	HOLDER	ﾎﾙﾀﾞ	1	[RWL2]
26	23302-42311		BULB,12V/3.4W	ﾊﾞﾙﾌﾞ	1	[RWL2]
27	22679-47301		GROMMET	ｸﾞﾛﾒｯﾄ	2	[RWL2]
28	26062-42881		RELAY,12V	ﾘﾚｰ	1	[RWL2/BBR]
29	214A2-42611		SCREW	ｽｸﾘｭ	1	[RWL2/BBR]

FIG.27 REVOLVING LIGHT [RLY][RLR]

(F60124E0) リボルビングライト

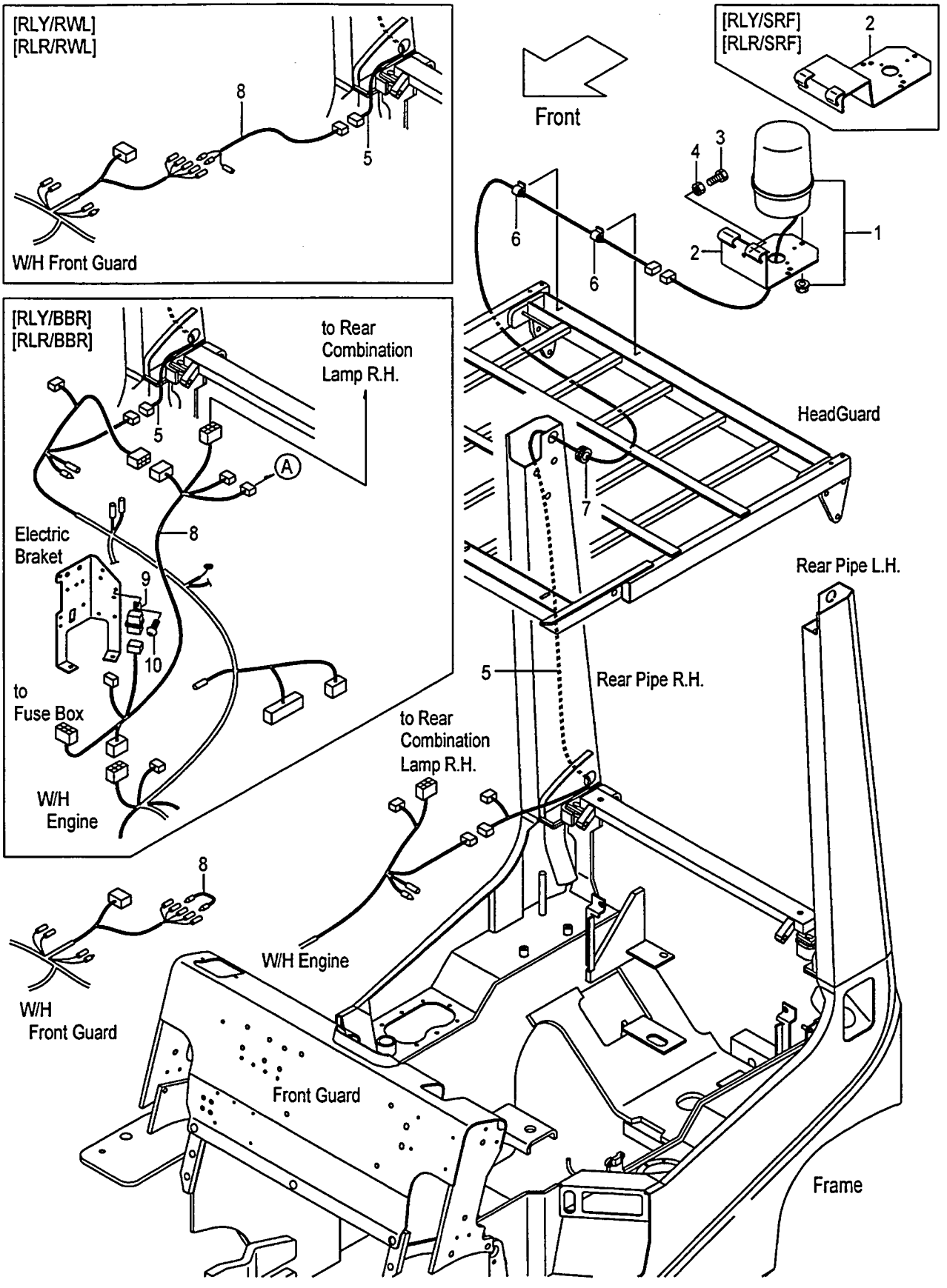

A:FD10C12 FD10T12 FD15C12 FD15T12 FD18C12 FD18T12

Item No	Part No.	Mark	Description		Req'd	Remarks : Serial No.
1	514A1-41001		LIGHT,REVOLVING	ﾗｲﾄ	1	[RLYS][RLYS/BKTL]
-	514A1-41011		LIGHT,REVOLVING	ﾗｲﾄ	1	[RLRS][RLRS/BKTL]
-	514A1-41021		LIGHT,REVOLVING	ﾗｲﾄ	1	[RLYM][RLYM/BKTL]
-	514A1-41031		LIGHT,REVOLVING	ﾗｲﾄ	1	[RLRM][RLRM/BKTL]
2	529F1-42251		BRACKET,REVOLVING	ﾌﾞﾗｹｯﾄ	1	[RLYS][RLRS][RLYM][RLRM]
-	529F1-42201		BRACKET,REVOLVING	ﾌﾞﾗｹｯﾄ	1	[RLYS/BKTL][RLRS/BKTL] [RLYM/BKTL][RLRM/BKTL]
-	539A8-92251		BRACKET,REVOLVING	ﾌﾞﾗｹｯﾄ	1	[RLYS/SRF][RLRS/SRF] [RLYM/SRF][RLRM/SRF]
3	01100-08020		BOLT	ﾎﾞﾙﾄ	3	[RLYS][RLRS][RLYM][RLRM]
4	01400-00008		NUT	ﾅｯﾄ	3	[RLYS][RLRS][RLYM][RLRM]
5	516G8-92001		WIRE,LEAD	ﾜｲﾔ	1	[RLY][RLR]
-	514A1-42191		WIRE,LEAD	ﾜｲﾔ	1	[RLY/BBR][RLR/BBR][RLY/RWL] [RLR/RWL]
6	27732-42311		CLAMP,HARNESS	ｸﾗﾝﾌﾟ	2	[RLY][RLR]
7	22679-47301		GROMMET	ｸﾞﾛﾒｯﾄ	1	[RLY][RLR]
8	516G1-42211		WIRE,LEAD	ﾜｲﾔ	1	[RLY][RLR]
-	539A8-92111		WIRE,LEAD	ﾜｲﾔ	1	[RLY/BBR][RLR/BBR]
-	514A1-42041		WIRE,LEAD	ﾜｲﾔ	1	[RLY/RWL][RLR/RWL]
9	26062-42881		RELAY,12V	ﾘﾚｰ	1	[RLY/BBR][RLR/BBR]
10	214A2-42611		SCREW	ｽｸﾘｭ	1	[RLY/BBR][RLR/BBR]

FIG.28 SPOT LIGHT [SPL]

(F6012610) ｽﾎﾟｯﾄﾗｲﾄ

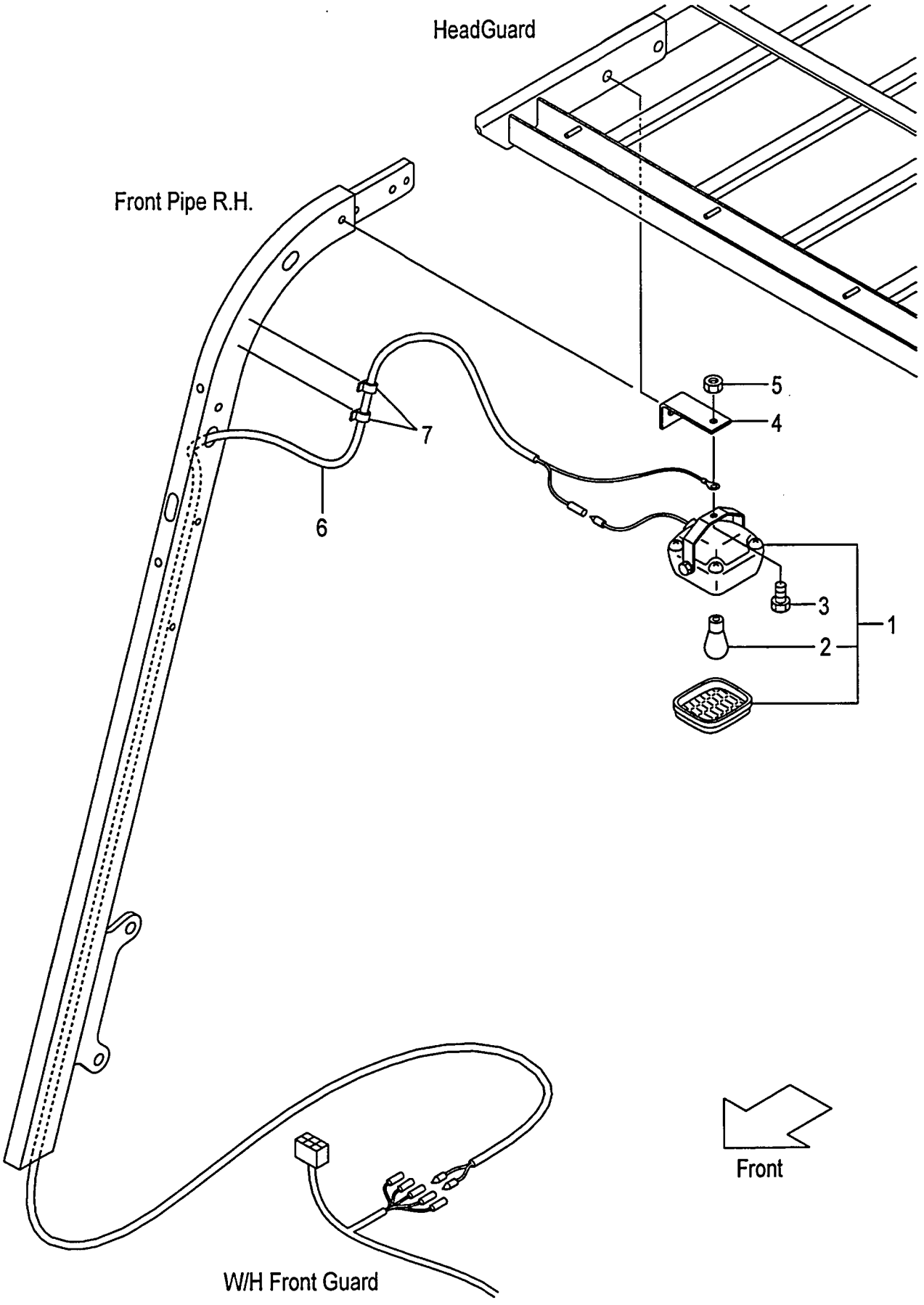

A:FD10C12 FD10T12 FD15C12 FD15T12 FD18C12 FD18T12

Item No	Part No.	Mark	Description		Req'd	Remarks : Serial No.
1	516G9-10101		LIGHT	ﾗｲﾄ	1	[SPL] INC.2
2	516G9-12011		BULB,12V/18.2W	ﾊﾞﾙﾌﾞ	1	[SPL]
3	01185-08016		BOLT	ﾎﾞﾙﾄ	1	[SPL]
4	539A9-02001		BRACKET,SPOT-LAMP	ﾌﾞﾗｹｯﾄ	1	[SPL]
5	01400-00008		NUT	ﾅｯﾄ	1	[SPL]
6	539A9-02011		WIRE-HARNESS,SPOT-LIGHT	ﾜｲﾔﾊｰﾈｽ	1	[SPL]
7	27732-42311		CLAMP,HARNESS	ｸﾗﾝﾌﾟ	2	[SPL]

FIG.29 HEATER UNIT [HR]

(F60124G0) ヒータユニット

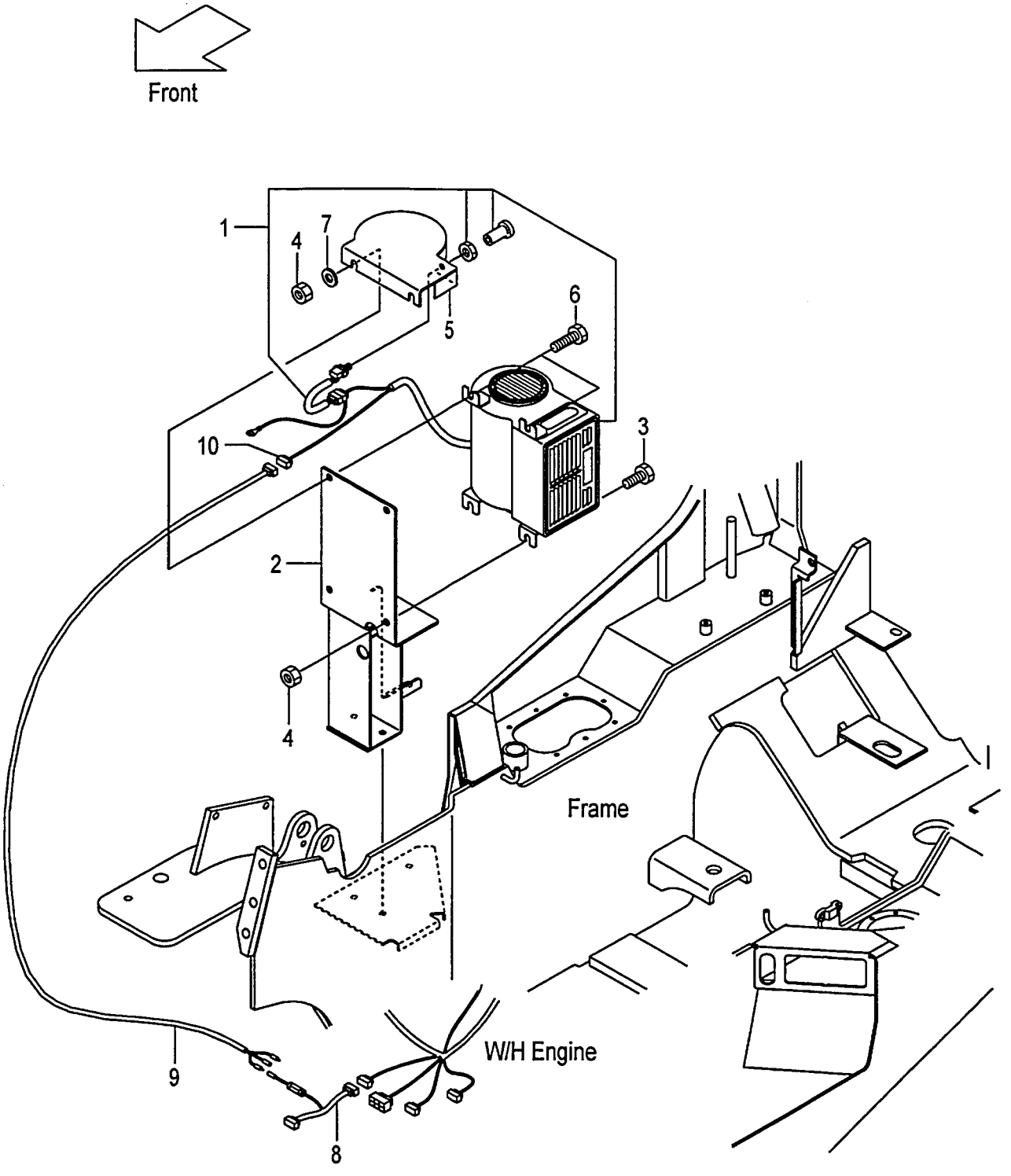

FIG.29
(F60124G0)

A:FD10C12 FD10T12 FD15C12 FD15T12 FD18C12 FD18T12

Item No	Part No.	Mark	Description		Req'd	Remarks : Serial No.
1	514T7-20201		HEATER,CAR	ヒータ	1	[HR]
2	539A7-22513		BRACKET,HEATER	ブラケット	1	[HR]
3	01186-10020		BOLT	ボルト	2	[HR]
4	01400-00010		NUT	ナット	4	[HR]
5	539A7-22611		PLATE,TOP,HR	プレート	1	[HR]
6	01186-10025		BOLT	ボルト	2	[HR]
7	02000-00010		WASHER	ワッシャ	2	[HR]
8	514T7-22061		WIRE,LEAD	ワイヤ	1	[HR]
9	514A1-42041		WIRE,LEAD	ワイヤ	1	[HR]
10	534A7-22101		CONNECTOR,MALE	コネクタ	1	[HR]
11	27042-43501	+	TERMINAL	ターミナル	2	[HR]

FIG.30 HEATER VALVE & ELBOW [HR]

(F60124J0) ﾋｰﾀﾊﾞﾙﾌﾞ&ｴﾙﾎﾞ

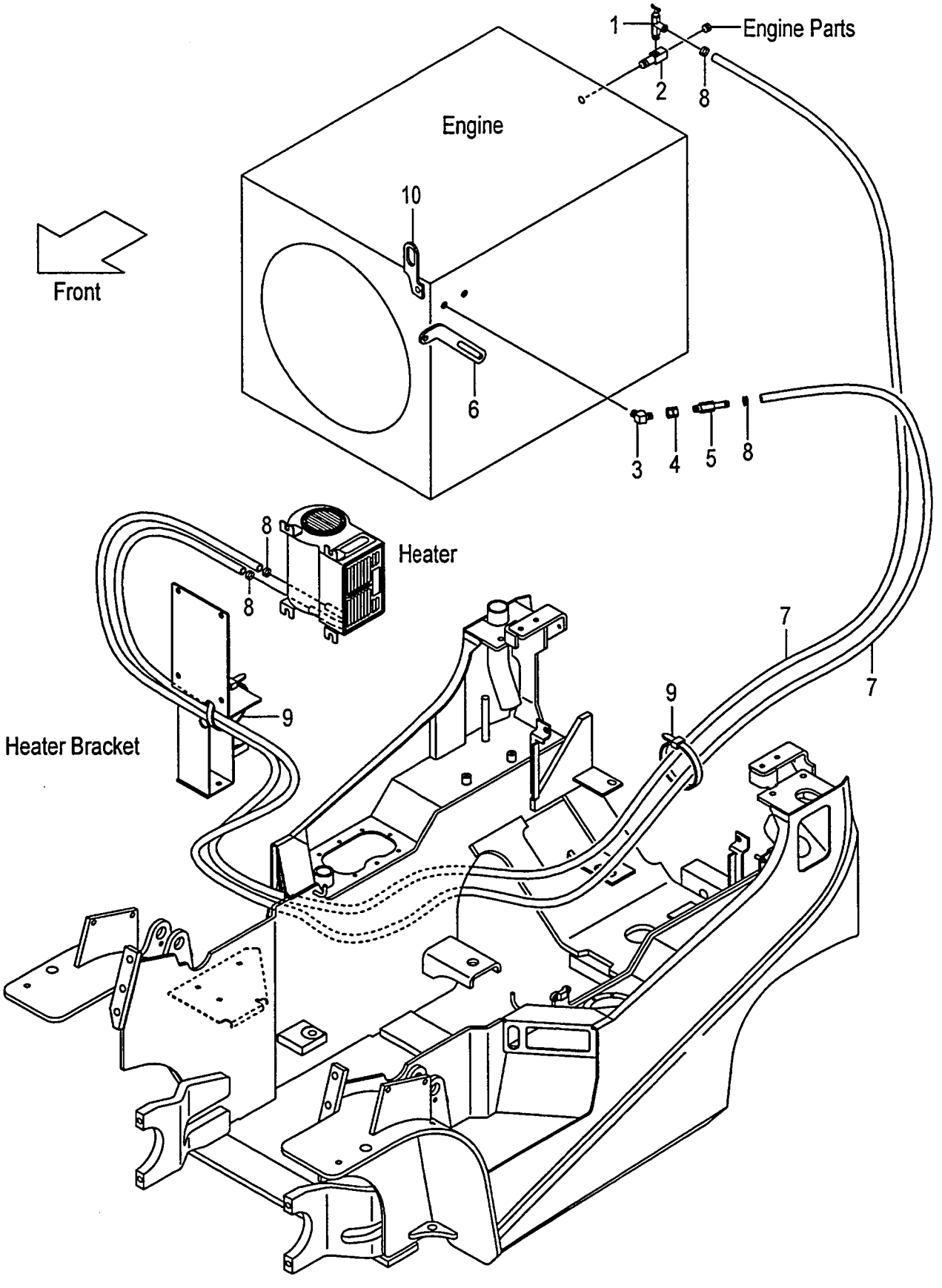

A:FD10C12 FD10T12 FD15C12 FD15T12 FD18C12 FD18T12

Item No	Part No.	Mark	Description		Req'd	Remarks : Serial No.
1	56110-63521		VALVE,WATER	ﾊﾞﾙﾌﾞ	1	[HR]
2	55597-22111		ELBOW	ｴﾙﾎﾞ	1	[HR]
3	53130-12091		ELBOW	ｴﾙﾎﾞ	1	[HR]
4	04138-00303		UNION	ﾕﾆｵﾝ	1	[HR]
5	529F7-22001		NIPPLE	ﾆｯﾌﾟﾙ	1	[HR]
6	520F7-22001		PLATE,ADJUST	ﾌﾟﾚｰﾄ	1	[HR]
7	522A7-22011		HOSE,WATER	ﾎｰｽ	2	[HR]
8	04911-00022		CLIP	ｸﾘｯﾌﾟ	4	[HR]
9	04913-11200		BAND	ﾊﾞﾝﾄﾞ	10	[HR]
10	539A7-22301		HANGER,E/G	ﾊﾝｶﾞ	1	[HR]

FIG.31 FAN [FAN]

(F6012620) ファン

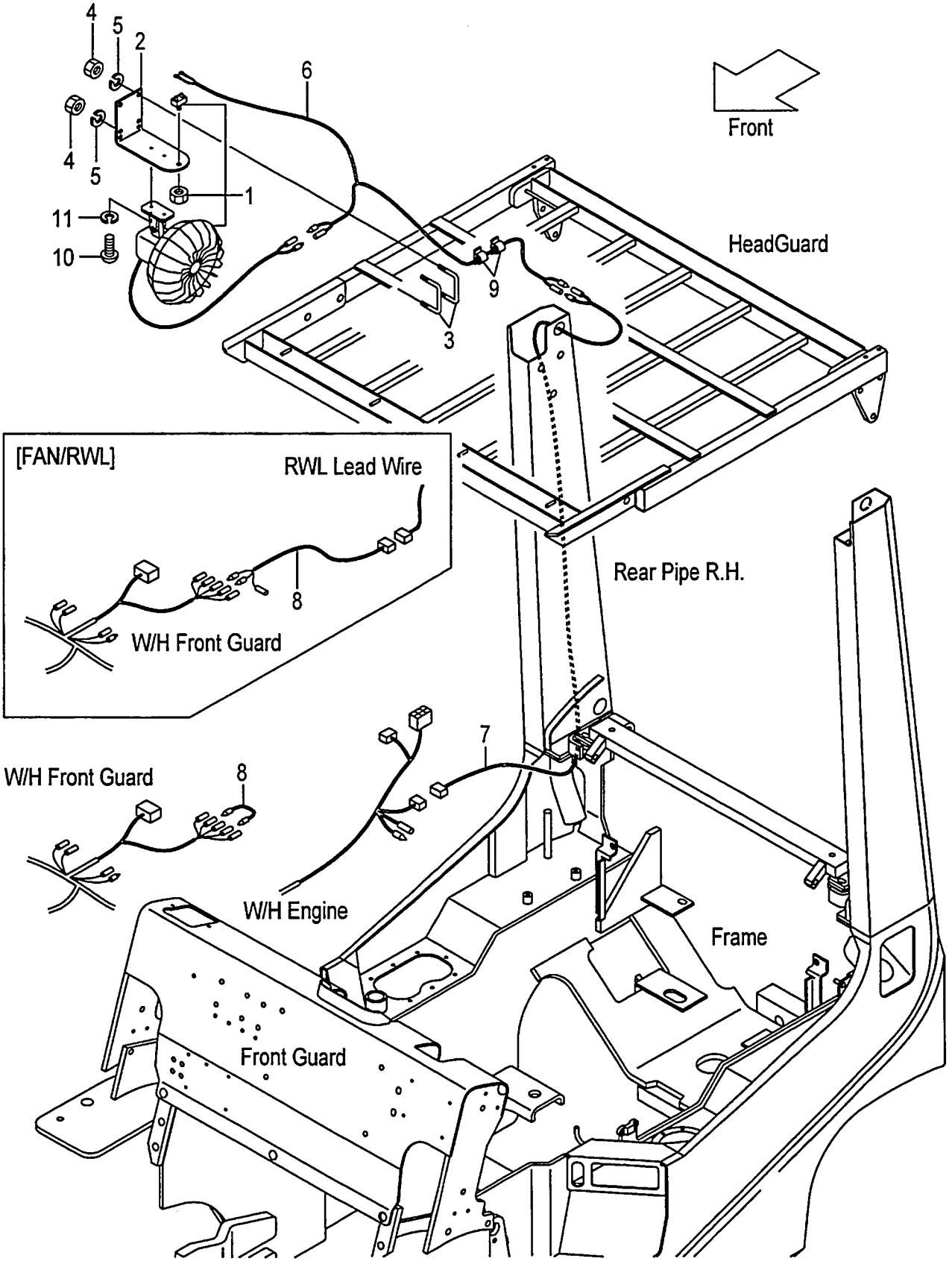

FIG.31
(F6012620)

A:FD10C12 FD10T12 FD15C12 FD15T12 FD18C12 FD18T12

Item No	Part No.	Mark	Description		Req'd	Remarks : Serial No.
1	514A5-32341		FAN,CAR	ﾌｧﾝ	1	[FAN]
2	539A8-22101		BRACKET,FAN	ﾌﾞﾗｹｯﾄ	1	[FAN]
3	55812-42011		U-BOLT	Uﾎﾞﾙﾄ	2	[FAN]
4	01400-00008		NUT	ﾅｯﾄ	4	[FAN]
5	02010-00008		WASHER	ﾜｯｼｬ	4	[FAN]
6	539A8-22151		WIRE-HARNESS,FAN	ﾜｲﾔﾊｰﾈｽ	1	[FAN]
7	516G1-42101		WIRE,LEAD	ﾜｲﾔ	1	[FAN]
8	516G1-42211		WIRE,LEAD	ﾜｲﾔ	1	[FAN]
-	514A1-42041		WIRE,LEAD	ﾜｲﾔ	1	[FAN/RWL]
9	27732-42311		CLAMP,HARNESS	ｸﾗﾝﾌﾟ	4	[FAN]
10	01030-04014		SCREW	ｽｸﾘｭ	2	[FAN]
11	02010-00004		WASHER	ﾜｯｼｬ	2	[FAN]

FIG.32 AMMETER [AM]

(F6012630) アンメータ

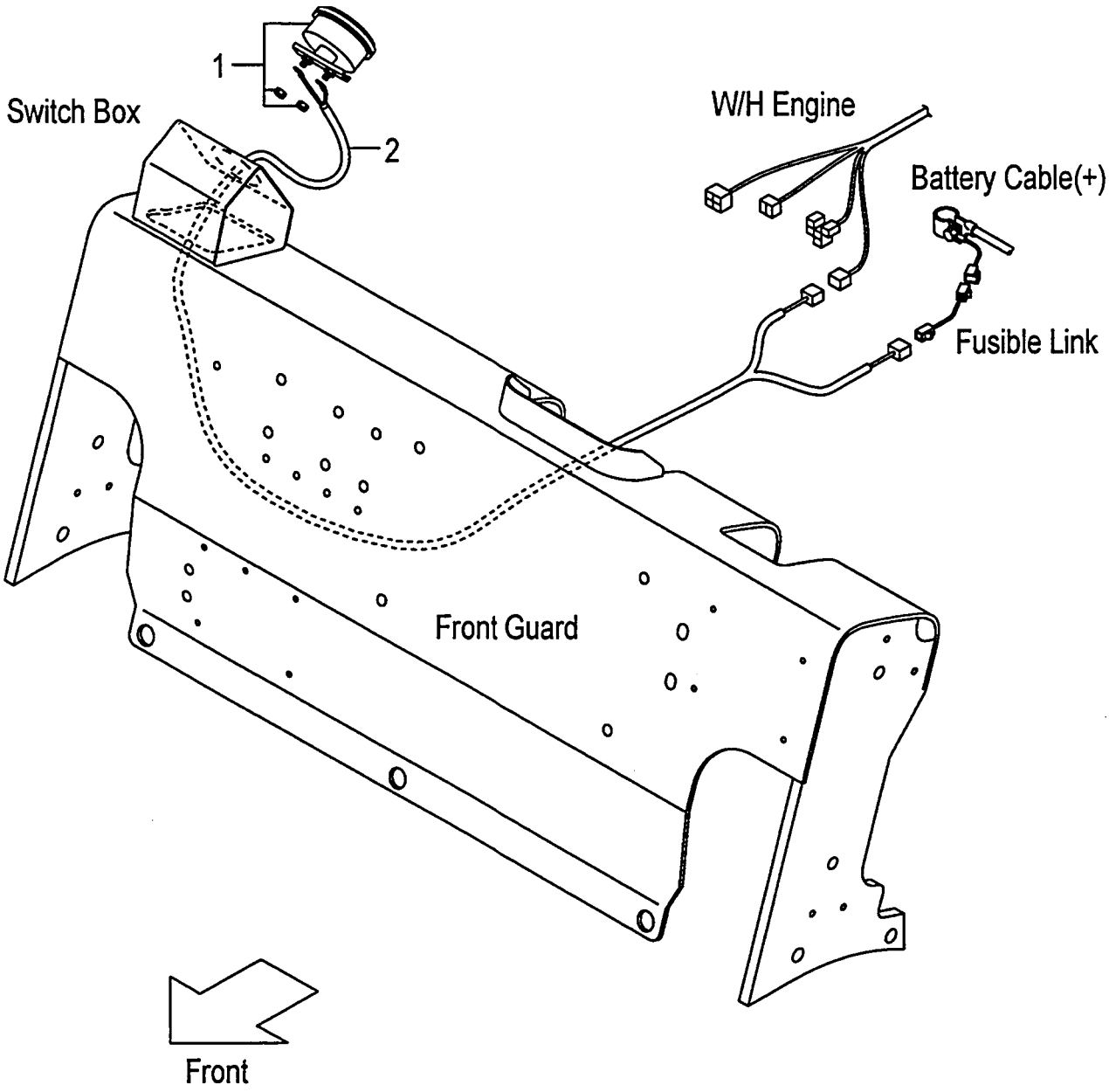

FIG.32
(F6012630)

A:FD10C12 FD10T12 FD15C12 FD15T12 FD18C12 FD18T12

Item No	Part No.	Mark	Description	Req'd	Remarks : Serial No.
1	3956323		AMMETER,50A アンメータ	1	[AM]
2	516G6-12051		WIRE,LEAD,AMMETER ワイヤ	1	[AM]

FIG.33 SPEED METER [SM]
(F6012640) ｽﾋﾟｰﾄﾞﾒｰﾀ

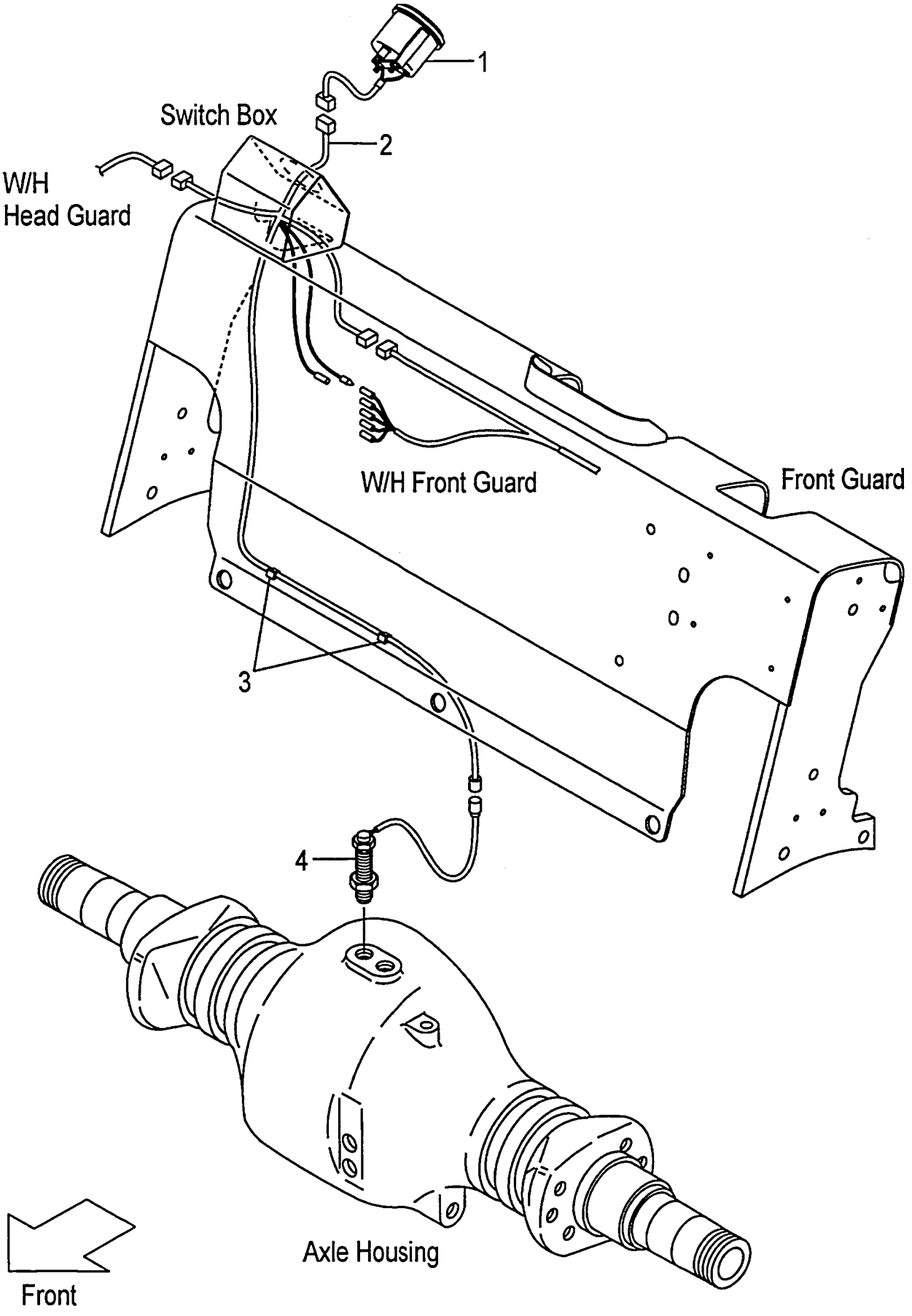

FIG.33
(F6012640)

A:FD10C12 FD10T12 FD15C12 FD15T12 FD18C12 FD18T12

Item No	Part No.	Mark	Description		Req'd	Remarks : Serial No.
1	516G7-50101		METER,SPEED	ﾒｰﾀ	1	[SM]
2	516G7-50301		WIRE-HARNESS,SM	ﾜｲﾔﾊｰﾈｽ	1	[SM]
3	27732-42311		CLAMP,HARNESS	ｸﾗﾝﾌﾟ	2	[SM]
4	16402-54331		SENSOR	ｾﾝｻ	1	[SM]

FIG.34 TORQUE CONVERTER THERMOMETER [TTM]

(F6012650) トルクコンバータサーモメータ

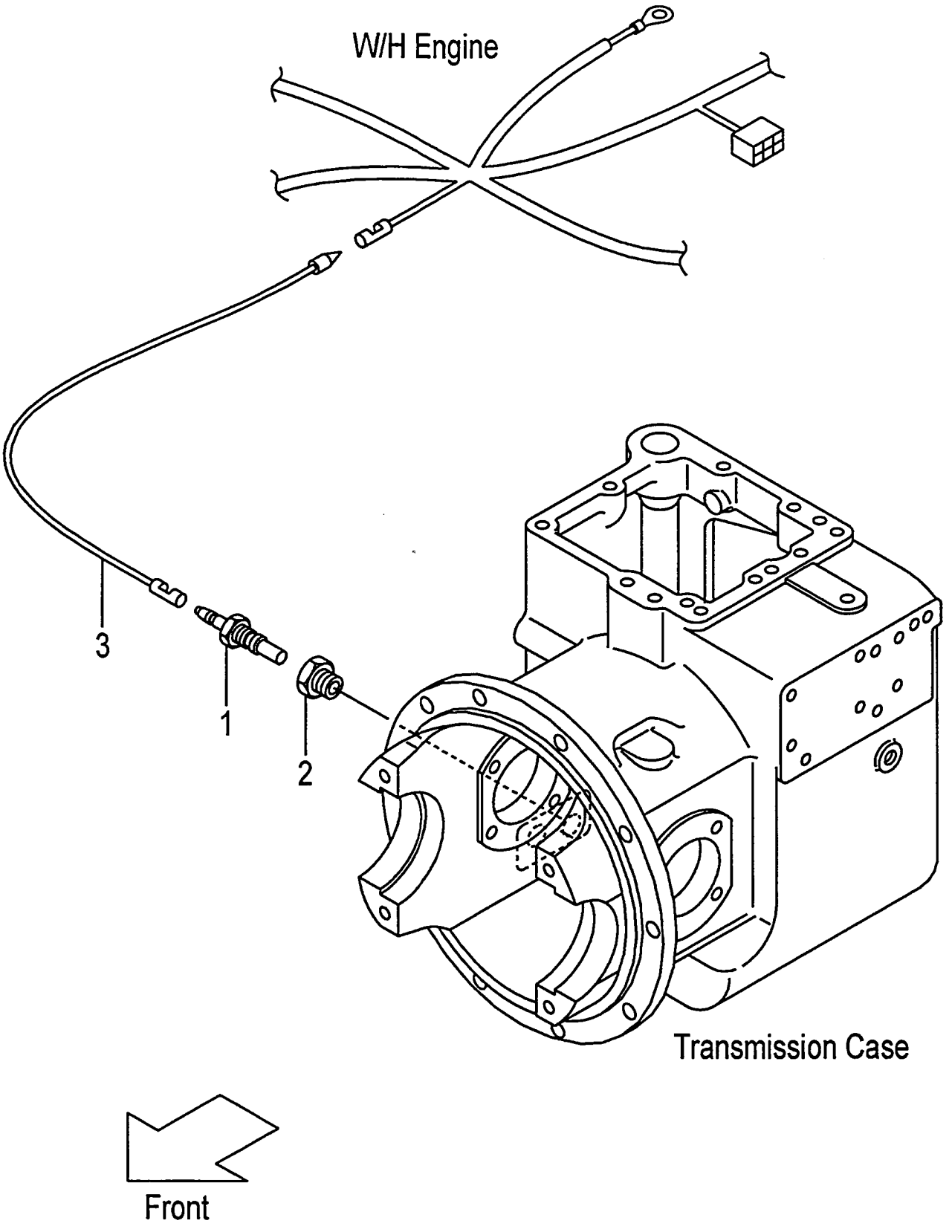

FIG.34
(F6012650)

A:FD10T12 FD15T12 FD18T12

Item No	Part No.	Mark	Description	Req'd	Remarks : Serial No.
1	23652-44001		UNIT,SENDING ﾕﾆｯﾄ	1	[TTM]
2	521A2-42061		ADAPTER,THERMO-SW. ｱﾀﾞﾌﾟﾀ	1	[TTM]
3	214A2-42371		WIRE,LEAD ﾜｲﾔ	1	[TTM]

FIG.35 TORQUE CONVERTER PRESSURE METER [TPM]

(F6012660) トルクコンバータプレッシャメータ

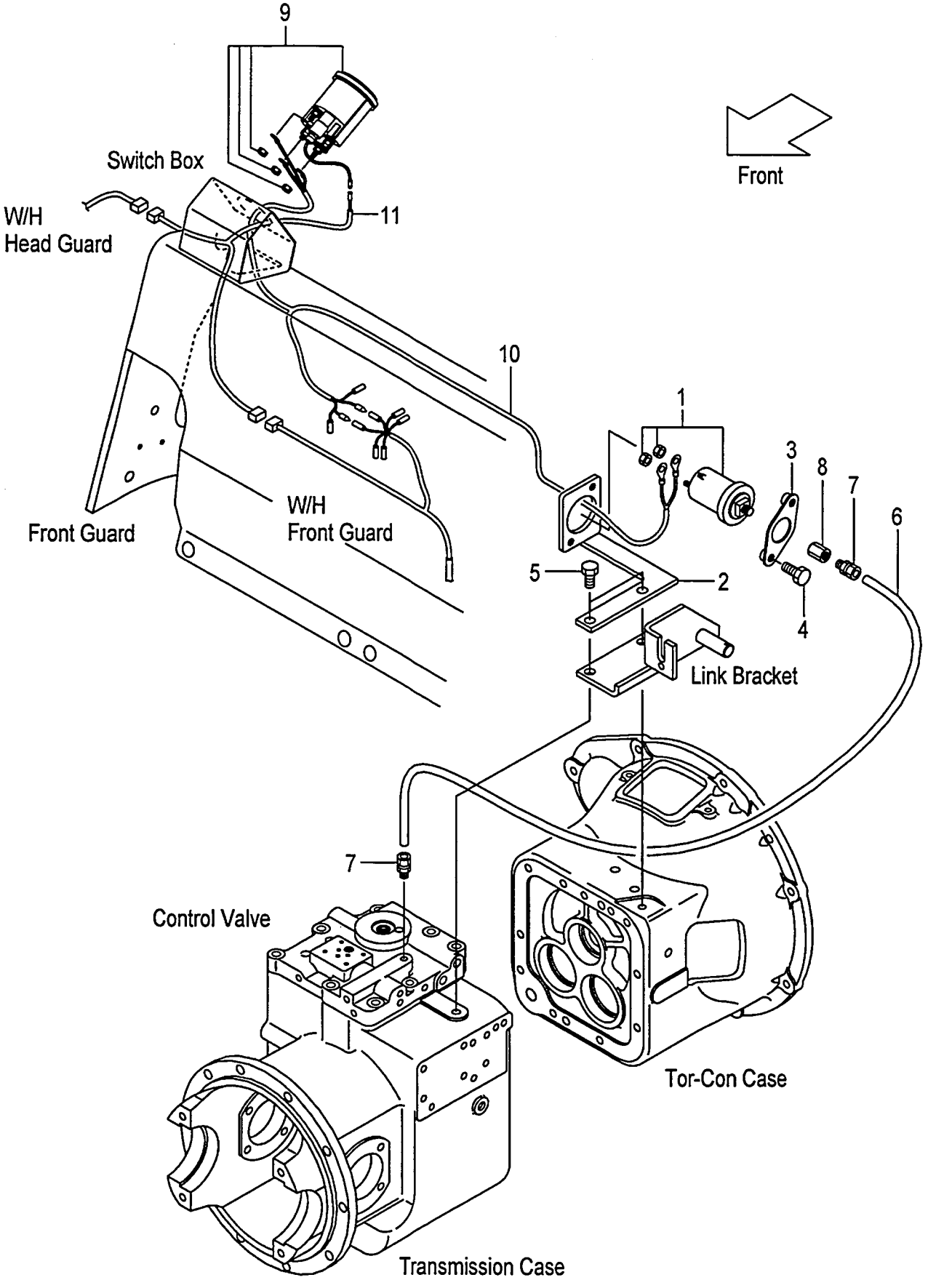

FIG.35
(F6012660)

A:FD10T12 FD15T12 FD18T12

Item No	Part No.	Mark	Description		Req'd	Remarks : Serial No.
1	516G6-92001		SENSOR,PRESS.GAUGE	ｾﾝｻ	1	[TPM]
2	516G6-92121		BRACKET,SENSOR	ﾌﾞﾗｹｯﾄ	1	[TPM]
3	516G6-92151		COVER,SENSOR	ｶﾊﾞｰ	1	[TPM]
4	01186-08025		BOLT	ﾎﾞﾙﾄ	2	[TPM]
5	01184-10025		BOLT	ﾎﾞﾙﾄ	2	[TPM]
6	539B6-92211		PIPE,CAPPER	ﾊﾟｲﾌﾟ	1	[TPM]
7	516G6-92011		JOINT	ｼﾞｮｲﾝﾄ	2	[TPM]
8	516G6-92031		ADAPTER	ｱﾀﾞﾌﾟﾀ	1	[TPM]
9	516G6-92022		GAUGE,PRESSURE	ｹﾞｰｼﾞ	1	[TPM]
10	516G6-92201		WIRE-HARNESS,TPM	ﾜｲﾔﾊｰﾈｽ	1	[TPM]
11	516G6-92211		WIRE-HARNESS,TPM	ﾜｲﾔﾊｰﾈｽ	1	[TPM]

FIG.36 SPEED DETECTOR UNIT [SAS]

(F6012670) ｽﾋﾟｰﾄﾞﾃﾞｨﾃｸﾀﾕﾆｯﾄ

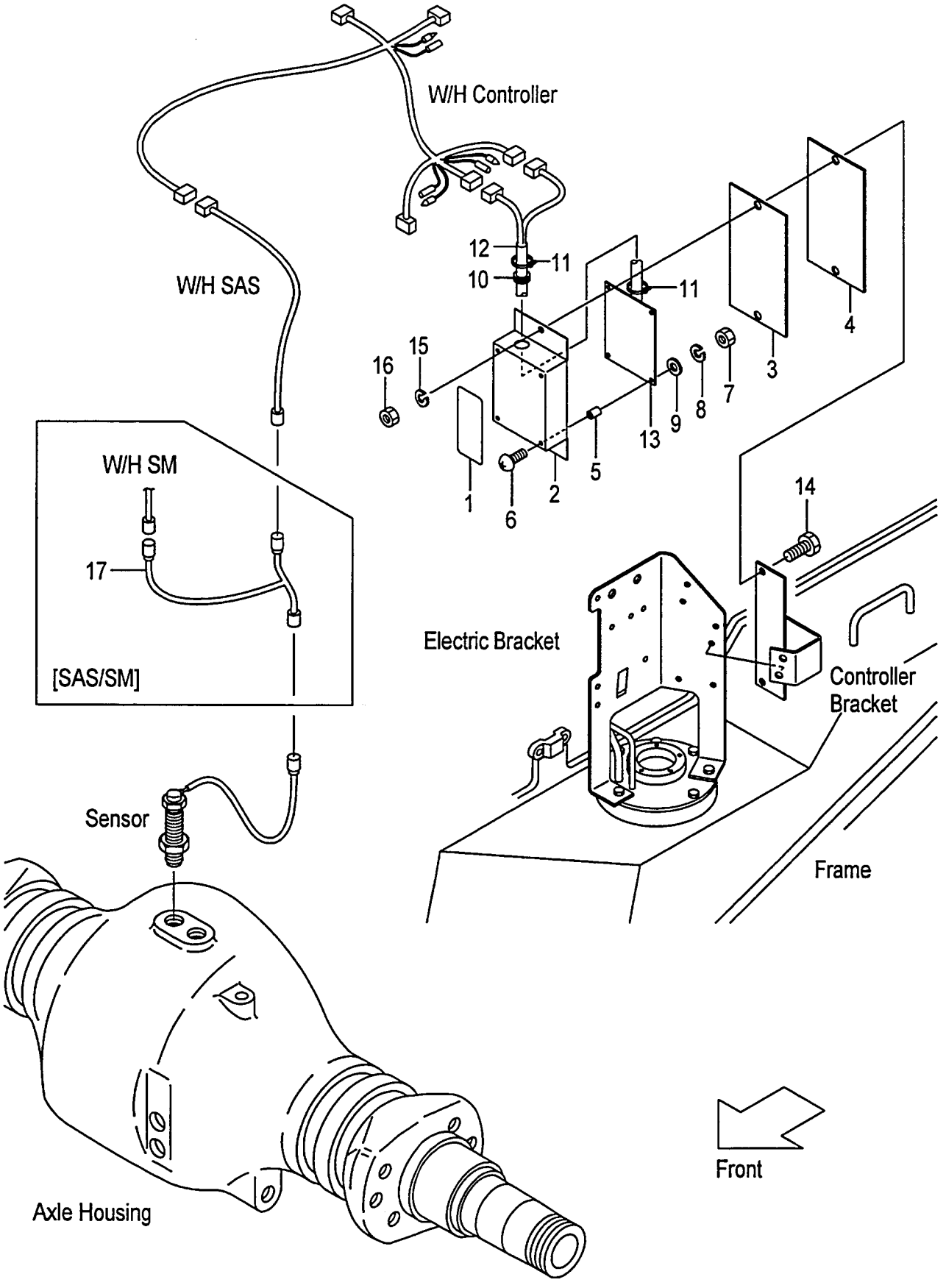

FIG.36
(F6012670)

A:FD10C12 FD10T12 FD15C12 FD15T12 FD18C12 FD18T12

Item No	Part No.	Mark	Description		Req'd	Remarks : Serial No.
A1	534A7-50301		UNIT-ASSY,SPEED-DETECT	ユニットアッセン	1	[SASB05][SASR05][SASC05] INC.1-16
-	534A7-50401		UNIT-ASSY,SPEED-DETECT	ユニットアッセン	1	[SASB10][SASR10][SASC10] INC.1-16
-	534A7-50501		UNIT-ASSY,SPEED-DETECT	ユニットアッセン	1	[SASB15][SASR15][SASC15] INC.1-16
1	539A7-52311		PLATE,NAME	プレート	1	[SASB05][SASR05][SASC05]
-	539A7-52411		PLATE,NAME	プレート	1	[SASB10][SASR10][SASC10]
-	539A7-52511		PLATE,NAME	プレート	1	[SASB15][SASR15][SASC15]
2	55792-52601		CASE	ケース	1	[SASB05&10&15][SASR05&10&15] [SASC05&10&15]
3	55792-52611		SHEET,SPONG	シート	1	[SASB05&10&15][SASR05&10&15] [SASC05&10&15]
4	55792-52621		PLATE	プレート	1	[SASB05&10&15][SASR05&10&15] [SASC05&10&15]
5	27042-64311		SPACER	スペーサ	4	[SASB05&10&15][SASR05&10&15] [SASC05&10&15]
6	01030-04020		SCREW	スクリュ	4	[SASB05&10&15][SASR05&10&15] [SASC05&10&15]
7	01400-00004		NUT	ナット	4	[SASB05&10&15][SASR05&10&15] [SASC05&10&15]
8	02010-00004		WASHER	ワッシャ	4	[SASB05&10&15][SASR05&10&15] [SASC05&10&15]
9	02000-00004		WASHER	ワッシャ	4	[SASB05&10&15][SASR05&10&15] [SASC05&10&15]
10	205A2-63311		GROMMET	グロメット	1	[SASB05&10&15][SASR05&10&15] [SASC05&10&15]
11	04913-10200		BAND	バンド	2	[SASB05&10&15][SASR05&10&15] [SASC05&10&15]
12	55792-52641		WIRE-HARNESS,ATC	ワイヤハーネス	1	[SASB05&10&15][SASR05&10&15] [SASC05&10&15]
13	534A7-52301		BOARD,PRINTED	ボード	1	[SASB05][SASR05][SASC05]
-	534A7-52401		BOARD,PRINTED	ボード	1	[SASB10][SASR10][SASC10]
-	534A7-52501		BOARD,PRINTED	ボード	1	[SASB15][SASR15][SASC15]
14	01100-06020		BOLT	ボルト	2	[SASB05&10&15][SASR05&10&15] [SASC05&10&15]
15	02010-00006		WASHER	ワッシャ	2	[SASB05&10&15][SASR05&10&15] [SASC05&10&15]
16	01400-00006		NUT	ナット	2	[SASB05&10&15][SASR05&10&15] [SASC05&10&15]
17	539A7-52041		WIRE-HARNESS,SAS/SM	ワイヤハーネス	1	[SAS/SM]

FIG.37 SPEED ALARM SYSTEM [SASB]

(F6012680) スピードアラームシステム

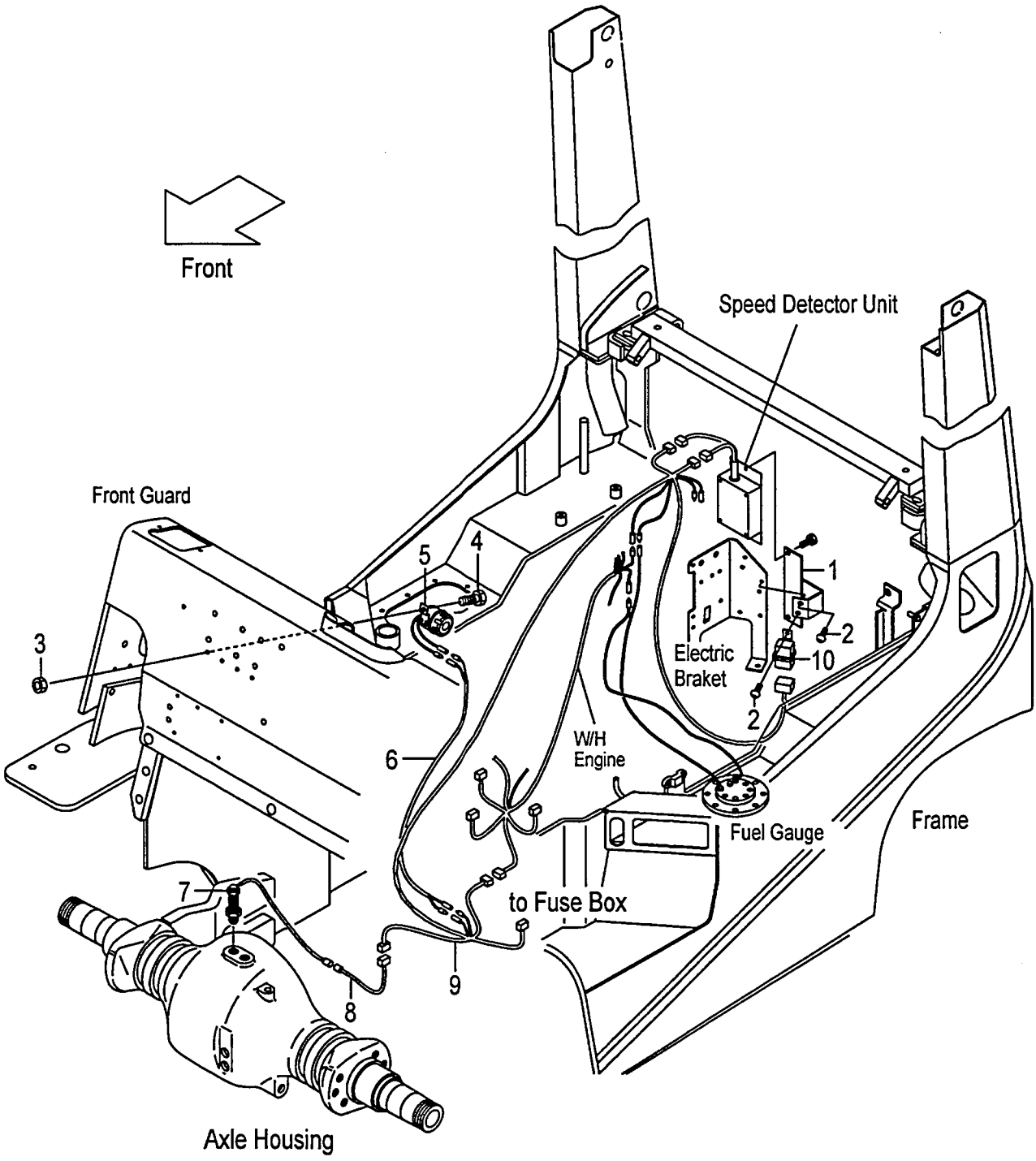

A:FD10C12 FD10T12 FD15C12 FD15T12 FD18C12 FD18T12

Item No	Part No.	Mark	Description		Req'd	Remarks : Serial No.
1	539A7-52001		BRACKET,CONTROLLER	ﾌﾞﾗｹｯﾄ	1	[SASB05][SASB10][SASB15]
2	214A2-42611		SCREW	ｽｸﾘｭ	2	[SASB05][SASB10][SASB15]
3	01400-00006		NUT	ﾅｯﾄ	1	[SASB05][SASB10][SASB15]
4	239A5-42381		BOLT	ﾎﾞﾙﾄ	1	[SASB05][SASB10][SASB15]
5	529F7-52241		ALARM,BUZZER	ｱﾗｰﾑ	1	[SASB05][SASB10][SASB15]
6	558A9-92001		WIRE-HARNESS	ﾜｲﾔﾊｰﾈｽ	1	[SASB05][SASB10][SASB15]
7	16402-54331		SENSOR	ｾﾝｻ	1	[SASB05][SASB10][SASB15]
8	534A7-50601		WIRE-HARNESS,SAS	ﾜｲﾔﾊｰﾈｽ	1	[SASB05][SASB10][SASB15]
9	539A7-52031		WIRE-HARNESS,CONTROL	ﾜｲﾔﾊｰﾈｽ	1	[SASB05][SASB10][SASB15]
10	26062-42881		RELAY,12V	ﾘﾚｰ	1	[SASB05][SASB10][SASB15]

FIG.38 SPEED ALARM SYSTEM [SASR]

(F6012690) スピードアラームシステム

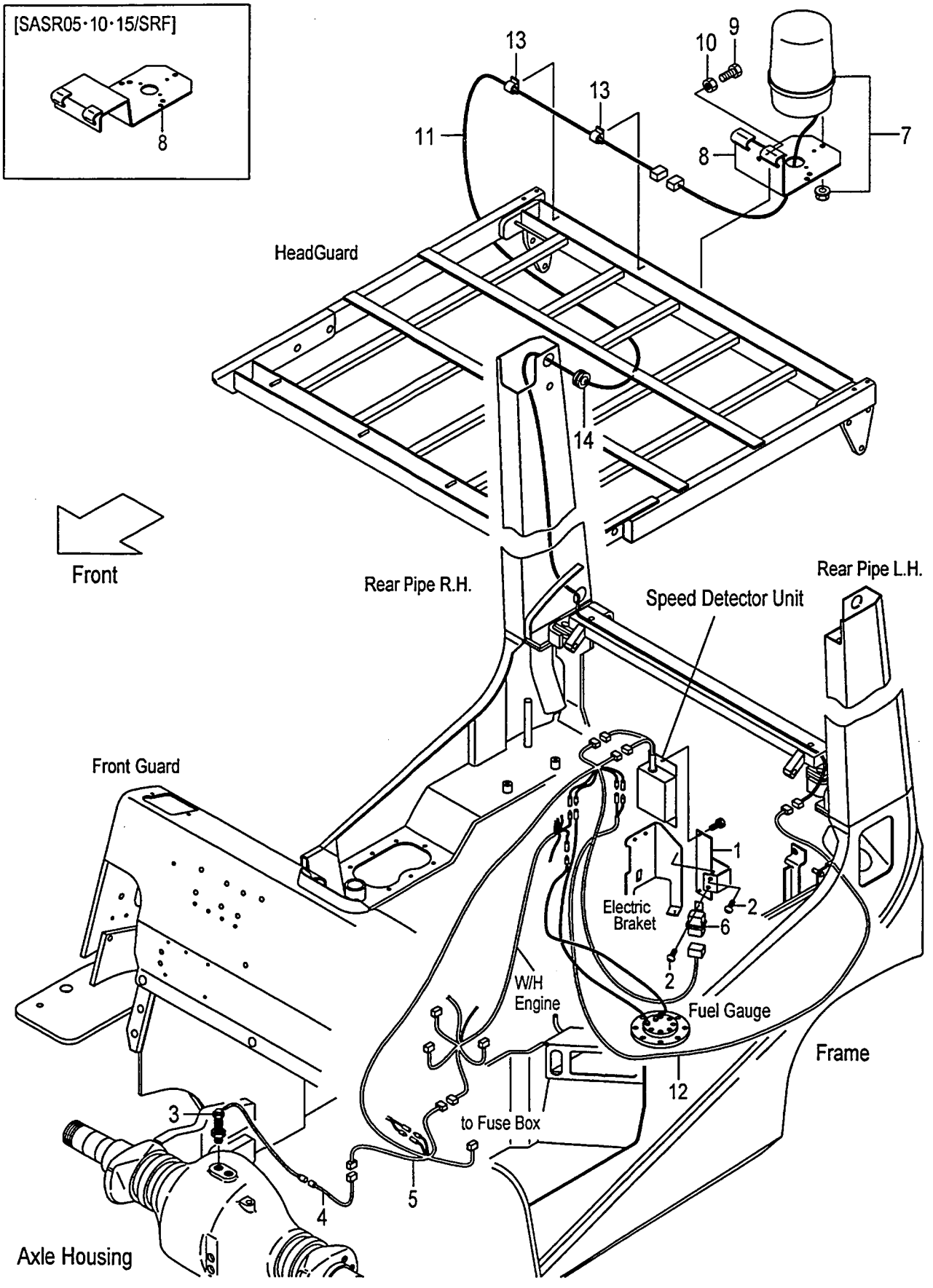

A:FD10C12 FD10T12 FD15C12 FD15T12 FD18C12 FD18T12

Item No	Part No.	Mark	Description		Req'd	Remarks : Serial No.
1	539A7-52001		BRACKET,CONTROLLER	ﾌﾞﾗｹｯﾄ	1	[SASR05][SASR10][SASR15]
2	214A2-42611		SCREW	ｽｸﾘｭ	2	[SASR05][SASR10][SASR15]
3	16402-54331		SENSOR	ｾﾝｻ	1	[SASR05][SASR10][SASR15]
4	534A7-50601		WIRE-HARNESS,SAS	ﾜｲﾔﾊｰﾈｽ	1	[SASR05][SASR10][SASR15]
5	539A7-52031		WIRE-HARNESS,CONTROL	ﾜｲﾔﾊｰﾈｽ	1	[SASR05][SASR10][SASR15]
6	26062-42881		RELAY,12V	ﾘﾚｰ	1	[SASR05][SASR10][SASR15]
7	514A1-41001		LIGHT,REVOLVING	ﾗｲﾄ	1	[SASR05][SASR10][SASR15]
8	529F1-42251		BRACKET,REVOLVING	ﾌﾞﾗｹｯﾄ	1	[SASR05][SASR10][SASR15]
-	539A8-92251		BRACKET,REVOLVING	ﾌﾞﾗｹｯﾄ	1	[SASR05/SRF][SASR10/SRF] [SASR15/SRF]
9	01100-08020		BOLT	ﾎﾞﾙﾄ	3	[SASR05][SASR10][SASR15]
10	01400-00008		NUT	ﾅｯﾄ	3	[SASR05][SASR10][SASR15]
11	514A1-42191		WIRE,LEAD	ﾜｲﾔ	1	[SASR05][SASR10][SASR15]
12	539A7-52101		WIRE,LEAD	ﾜｲﾔ	1	[SASR05][SASR10][SASR15]
13	27732-42311		CLAMP,HARNESS	ｸﾗﾝﾌﾟ	2	[SASR05][SASR10][SASR15]
14	22679-47301		GROMMET	ｸﾞﾛﾒｯﾄ	1	[SASR05][SASR10][SASR15]

FIG.39 SPEED ALARM SYSTEM [SASC]

(F60126A0) スピードアラームシステム

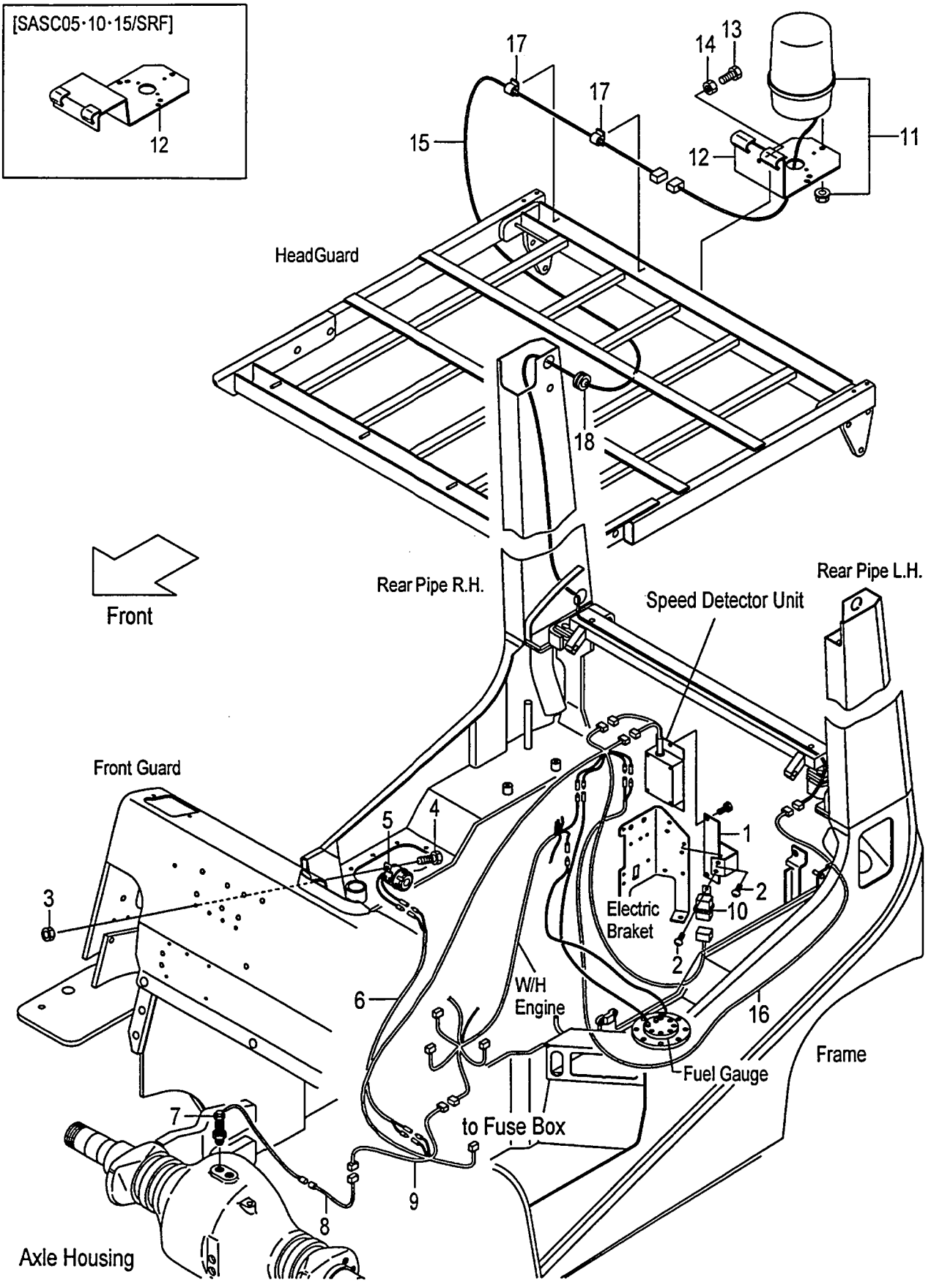

A:FD10C12 FD10T12 FD15C12 FD15T12 FD18C12 FD18T12

Item No	Part No.	Mark	Description		Req'd	Remarks : Serial No.
1	539A7-52001		BRACKET,CONTROLLER	ﾌﾞﾗｹｯﾄ	1	[SASC05][SASC10][SASC15]
2	214A2-42611		SCREW	ｽｸﾘｭ	2	[SASC05][SASC10][SASC15]
3	01400-00006		NUT	ﾅｯﾄ	1	[SASC05][SASC10][SASC15]
4	239A5-42381		BOLT	ﾎﾞﾙﾄ	1	[SASC05][SASC10][SASC15]
5	529F7-52241		ALARM,BUZZER	ｱﾗｰﾑ	1	[SASC05][SASC10][SASC15]
6	558A9-92001		WIRE-HARNESS	ﾜｲﾔﾊｰﾈｽ	1	[SASC05][SASC10][SASC15]
7	16402-54331		SENSOR	ｾﾝｻ	1	[SASC05][SASC10][SASC15]
8	534A7-50601		WIRE-HARNESS,SAS	ﾜｲﾔﾊｰﾈｽ	1	[SASC05][SASC10][SASC15]
9	539A7-52031		WIRE-HARNESS,CONTROL	ﾜｲﾔﾊｰﾈｽ	1	[SASC05][SASC10][SASC15]
10	26062-42881		RELAY,12V	ﾘﾚｰ	1	[SASC05][SASC10][SASC15]
11	514A1-41001		LIGHT,REVOLVING	ﾗｲﾄ	1	[SASC05][SASC10][SASC15]
12	529F1-42251		BRACKET,REVOLVING	ﾌﾞﾗｹｯﾄ	1	[SASC05][SASC10][SASC15]
-	539A8-92251		BRACKET,REVOLVING	ﾌﾞﾗｹｯﾄ	1	[SASR05/SRF][SASC10/SRF] [SASC15/SRF]
13	01100-08020		BOLT	ﾎﾞﾙﾄ	3	[SASC05][SASC10][SASC15]
14	01400-00008		NUT	ﾅｯﾄ	3	[SASC05][SASC10][SASC15]
15	514A1-42191		WIRE,LEAD	ﾜｲﾔ	1	[SASC05][SASC10][SASC15]
16	539A7-52101		WIRE,LEAD	ﾜｲﾔ	1	[SASC05][SASC10][SASC15]
17	27732-42311		CLAMP,HARNESS	ｸﾗﾝﾌﾟ	2	[SASC05][SASC10][SASC15]
18	22679-47301		GROMMET	ｸﾞﾛﾒｯﾄ	1	[SASC05][SASC10][SASC15]

FIG.40 OK MONITOR [OKM]

(F60126B0) OKモニタ

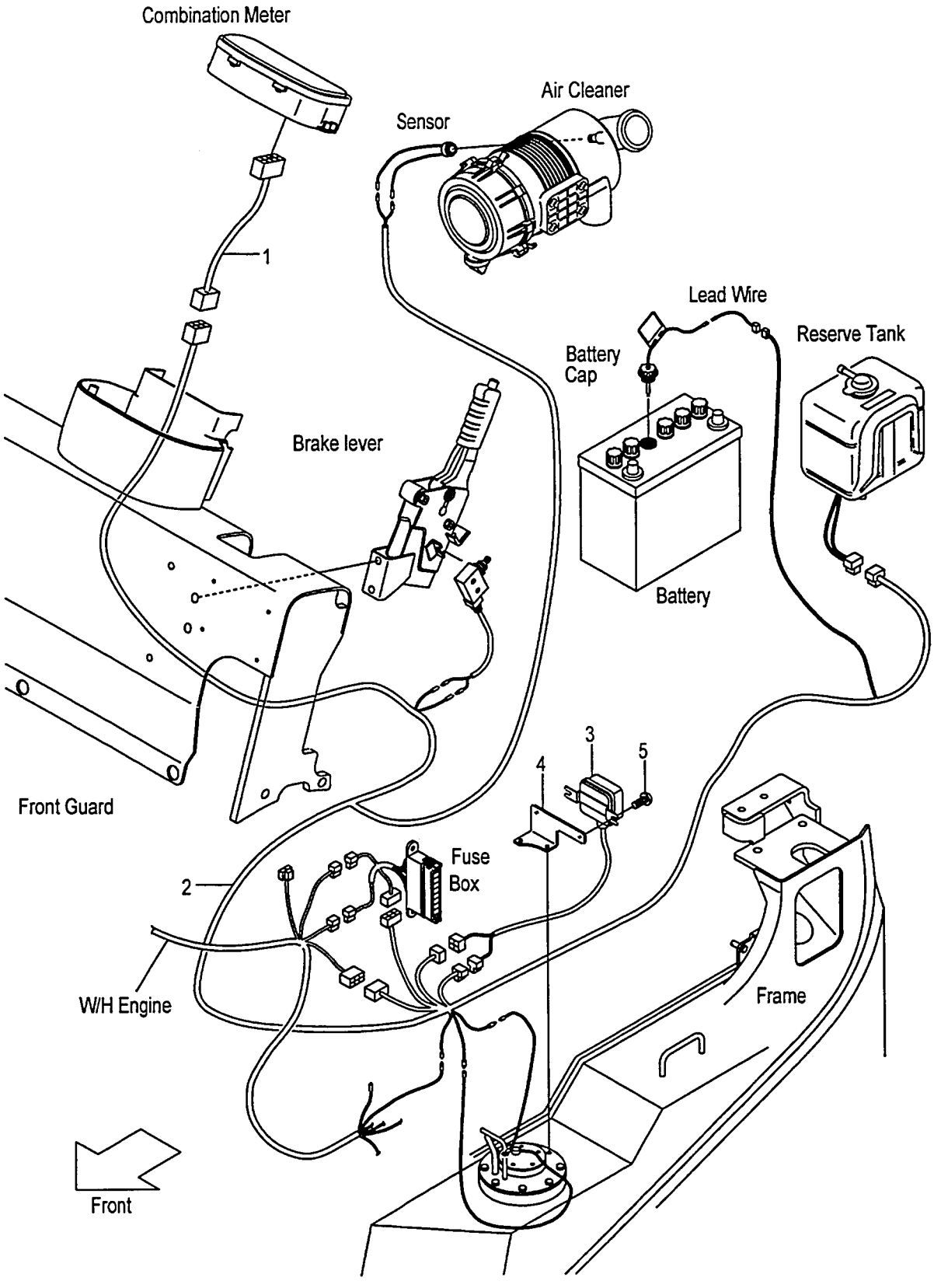

FIG.40
(F60126B0)

A:FD10C12 FD10T12 FD15C12 FD15T12 FD18C12 FD18T12

Item No	Part No.	Mark	Description		Req'd	Remarks : Serial No.
1	516G6-22011		WIRE,LEAD	ﾜｲﾔ	1	[OKM]
2	539A6-22011		WIRE-HARNESS,OKM	ﾜｲﾔﾊｰﾈｽ	1	[OKM]
3	229F2-42161		MODULE,WARNING	ﾓｼﾞｭｰﾙ	1	[OKM]
4	539A6-22001		BRACKET,WARNING-MODULE	ﾌﾞﾗｹｯﾄ	1	[OKM]
5	214A2-42611		SCREW	ｽｸﾘｭ	2	[OKM]

FIG.41 DRIVE UNIT MOUNT (CLUTCH)

(F6012510) ﾄﾞﾗｲﾌﾞﾕﾆｯﾄﾏｳﾝﾄ

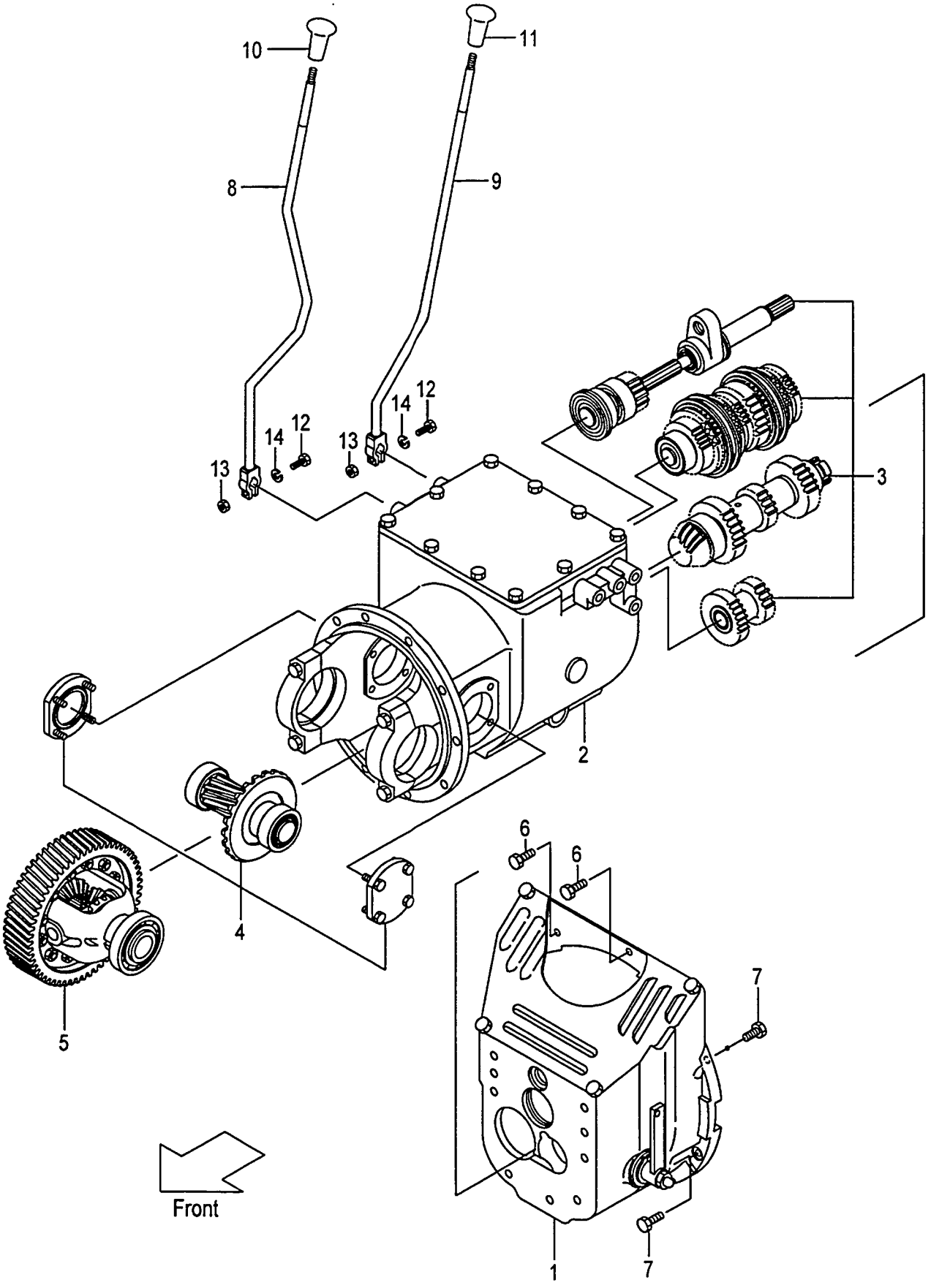

A:FD10C12 FD15C12 FD18C12

Item No	Part No.	Mark	Description		Req'd	Remarks : Serial No.
A1	116G2-50001		UNIT-ASSY,DRIVE	ﾄﾞﾗｲﾌﾞﾕﾆｯﾄｱｯｾﾝ	1	INC.1-5
-	116G2-50041		UNIT-ASSY,DRIVE	ﾄﾞﾗｲﾌﾞﾕﾆｯﾄｱｯｾﾝ	1	[PC] INC.1-5
1	NO PART NO.		CLUTCH	ｸﾗｯﾁ	1	SEE FIG.42
-	NO PART NO.		CLUTCH	ｸﾗｯﾁ	1	[PC]SEE FIG.42
A2	116G2-50201		UNIT-SUB-ASSY,DRIVE	ﾄﾞﾗｲﾌﾞﾕﾆｯﾄｻﾌﾞｱｯｾﾝ	1	INC.2-5
-	116G2-50401		UNIT-SUB-ASSY,DRIVE	ﾄﾞﾗｲﾌﾞﾕﾆｯﾄｻﾌﾞｱｯｾﾝ	1	[PC] INC.2-5
2	NO PART NO.		CASE,T/M	ｹｰｽ	1	SEE FIG.43
-	NO PART NO.		CASE,T/M	ｹｰｽ	1	[PC]SEE FIG.43
3	NO PART NO.		GEAR,T/M	ｷﾞﾔｰ	1	SEE FIG.44
4	NO PART NO.		REDUCTION	ﾘﾀﾞｸｼｮﾝ	1	SEE FIG.52
5	NO PART NO.		DIFFERENTIAL	ﾃﾞﾌｧﾚﾝｼｬﾙ	1	SEE FIG.53
6	01184-10030		BOLT	ﾎﾞﾙﾄ	2	
7	01184-10035		BOLT	ﾎﾞﾙﾄ	6	
8	218G2-52002		LEVER,SPEED	ﾚﾊﾞｰ	1	
-	518G2-32002		LEVER,SPEED	ﾚﾊﾞｰ	1	[LCR]
9	218G2-52062		LEVER,DIRECTION	ﾚﾊﾞｰ	1	
-	518G2-32042		LEVER,DIRECTION	ﾚﾊﾞｰ	1	[LCR]
10	214A2-52002		KNOB,SPEED	ﾉﾌﾞ	1	
11	214A2-52012		KNOB,DIRECTION	ﾉﾌﾞ	1	
12	01100-08045		BOLT	ﾎﾞﾙﾄ	2	
13	01400-00008		NUT	ﾅｯﾄ	2	
14	02010-00008		WASHER	ﾜｯｼｬ	2	

FIG.42 CLUTCH (CLUTCH)

(F6012530) クラッチ

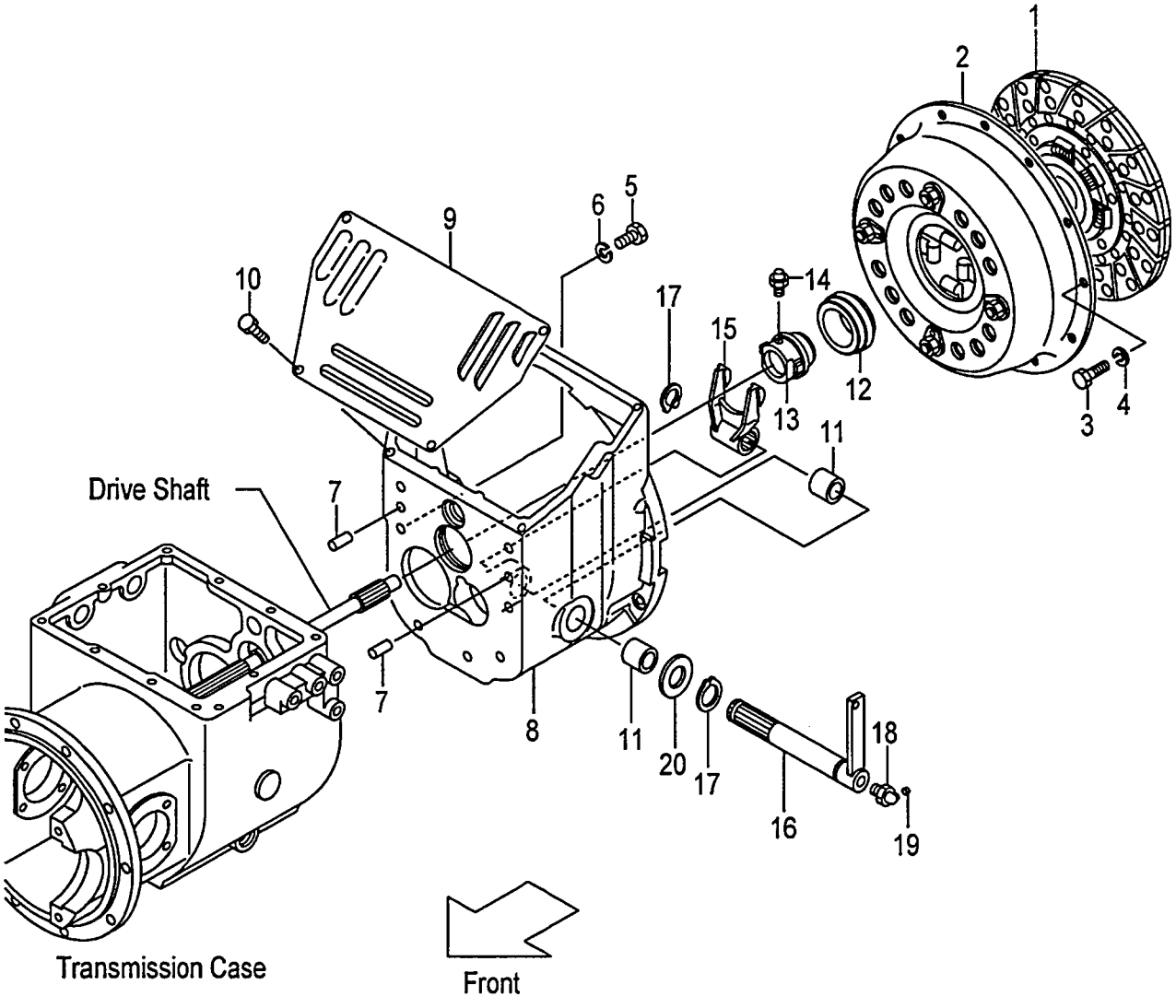

A:FD10C12 FD15C12 FD18C12

Item No	Part No.	Mark	Description		Req'd	Remarks : Serial No.
1	129F3-12041		DISC,CLUTCH	ﾃﾞｨｽｸ	1	
2	120A3-10301		COVER,CLUTCH	ｶﾊﾞｰ	1	
3	01103-08016		BOLT	ﾎﾞﾙﾄ	12	
4	02011-00008		WASHER	ﾜｯｼｬ	12	
5	01103-10030		BOLT	ﾎﾞﾙﾄ	7	
6	02010-00010		WASHER	ﾜｯｼｬ	7	
7	02212-12020		PIN,PARALLEL	ﾋﾟﾝ	2	
8	127A3-12001		HOUSING,CLUTCH	ﾊｳｼﾞﾝｸﾞ	1	
9	124G3-12011		COVER,CLUTCH-HOUSING	ｶﾊﾞｰ	1	
10	01183-08016		BOLT	ﾎﾞﾙﾄ	5	
11	12003-12021		BUSHING	ﾌﾞｯｼﾝｸﾞ	2	
12	15533-10301		BEARING	ﾍﾞｱﾘﾝｸﾞ	1	
13	113A3-12001		RETAINER,BRG	ﾘﾃｰﾅ	1	
14	04901-00100		FITTING	ﾌｨｯﾃｨﾝｸﾞ	1	
15	114A3-12012		YOKE	ﾖｰｸ	1	
16	114A3-10501		SHAFT	ｼｬﾌﾄ	1	
-	524G2-10502		SHAFT	ｼｬﾌﾄ	1	[PC]
17	02100-00025		RING,SNAP	ｽﾅｯﾌﾟﾘﾝｸﾞ	2	
18	04901-00160		FITTING	ﾌｨｯﾃｨﾝｸﾞ	1	
19	22199-12401		CAP	ｷｬｯﾌﾟ	2	
20	02000-00024		WASHER	ﾜｯｼｬ	1	

FIG.43 MISSION CASE (CLUTCH)

(F6012540) ミッションケース

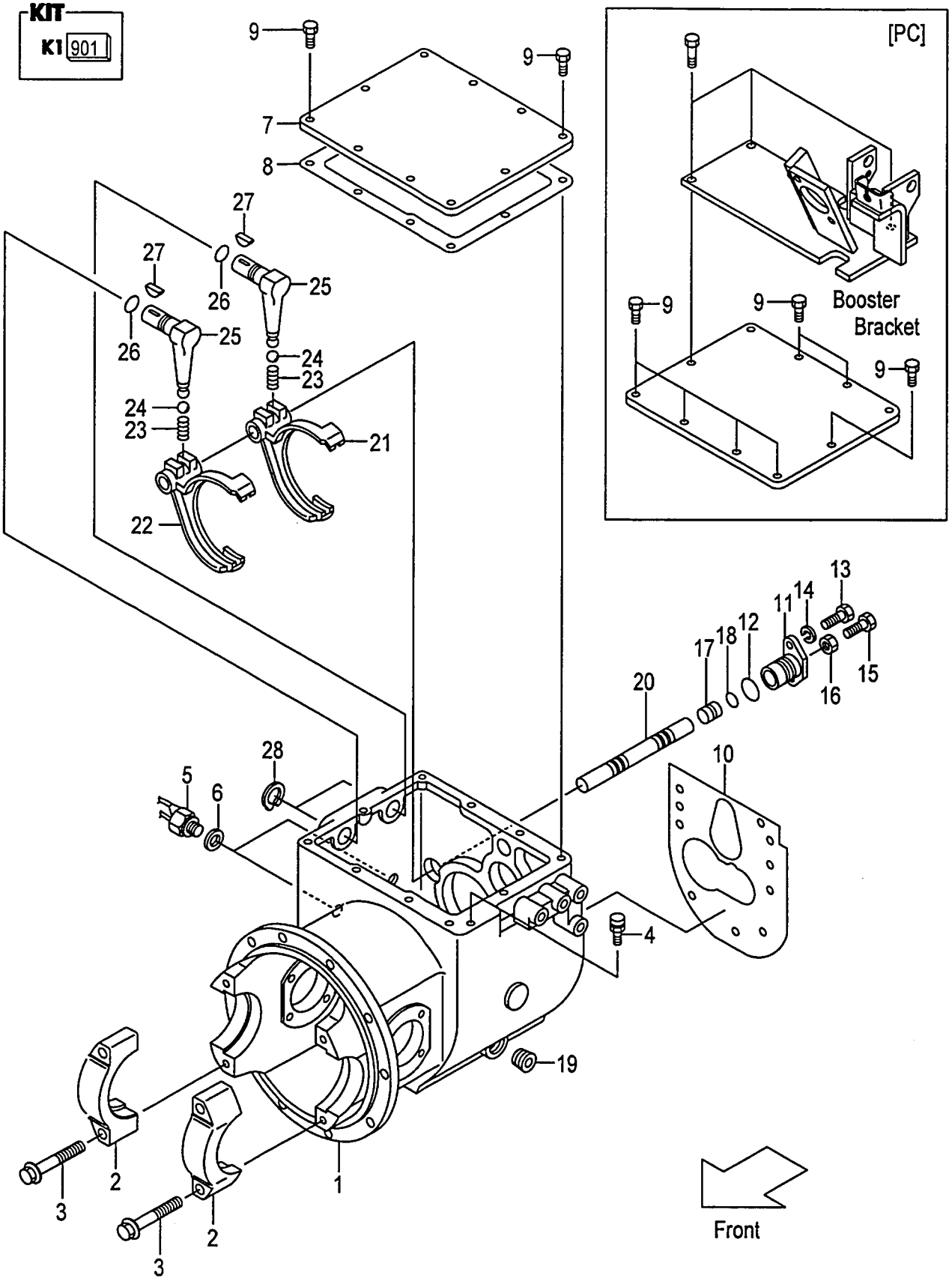

A:FD10C12 FD15C12 FD18C12

Item No	Part No.	Mark	Description		Req'd	Remarks : Serial No.
901	116A3-49811	K1	KIT,REPAIR,T/M	ﾘﾍﾟｱｷｯﾄ	1	INC.6,8,10,12,18,26-28 & OTHERS
A1	110F3-40302		CASE-ASSY,T/M	ﾄﾗﾝｽﾐｯｼｮﾝｹｰｽｱｯｾﾝ	1	INC.1,2
-	116W3-40201		CASE-ASSY,T/M	ﾄﾗﾝｽﾐｯｼｮﾝｹｰｽｱｯｾﾝ	1	[PC] INC.1,2
1	NO PART NO.	#	CASE,T/M	ｹｰｽ	1	
-	NO PART NO.	#	CASE,T/M	ｹｰｽ	1	[PC]
2	NO PART NO.	#	CAP,BRG	ｷｬｯﾌﾟ	2	
3	116G3-22001		BOLT	ﾎﾞﾙﾄ	4	
4	15573-42151		BREATHER,AIR	ﾌﾞﾘｰｻﾞ	1	
5	12003-42451		SWITCH,BACK-LAMP	ｽｲｯﾁ	2	
6	12003-42461	*	PACKING,BACK-LAMP	ﾊﾟｯｷﾝｸﾞ	2	
7	12003-42021		COVER,CASE	ｶﾊﾞｰ	1	
8	12003-42031	*	GASKET,CASE-COVER	ｶﾞｽｹｯﾄ	1	
9	01184-10016		BOLT	ﾎﾞﾙﾄ	10	
-	01184-10016		BOLT	ﾎﾞﾙﾄ	7	[PC]
10	127A3-42011	*	GASKET,CLUTCH	ｶﾞｽｹｯﾄ	1	
11	12003-42052		SUPPORT,ARM-SHAFT	ｻﾎﾟｰﾄ	1	
12	03310-00300	*	O-RING	Oﾘﾝｸﾞ	1	
13	01103-08020		BOLT	ﾎﾞﾙﾄ	2	
14	02011-00008		WASHER	ﾜｯｼｬ	2	
15	01123-10045		BOLT	ﾎﾞﾙﾄ	1	
16	01400-00010		NUT	ﾅｯﾄ	1	
17	12003-42061		SPACER	ｽﾍﾟｰｻ	1	
18	03300-00160	*	O-RING	Oﾘﾝｸﾞ	1	
19	12163-82541		PLUG	ﾌﾟﾗｸﾞ	1	
20	15573-42102		ROD,SHIFT	ﾛｯﾄﾞ	1	
21	15573-42112		FORK,SHIFT	ﾌｫｰｸ	1	
22	124G3-42111		FORK,SHIFT	ﾌｫｰｸ	1	
23	12003-42421		SPRING	ｽﾌﾟﾘﾝｸﾞ	2	
24	03190-00013		BALL,STEEL	ﾎﾞｰﾙ	2	
25	12003-42521		LEVER,SHIFT	ﾚﾊﾞｰ	2	
26	03300-00180	*	O-RING	Oﾘﾝｸﾞ	2	
27	02360-05019	*	KEY	ｷｰ	2	
28	02100-00022	*	RING,SNAP	ｽﾅｯﾌﾟﾘﾝｸﾞ	2	

FIG.44 MISSION GEAR (CLUTCH)

(F6012550) ミッションギヤー

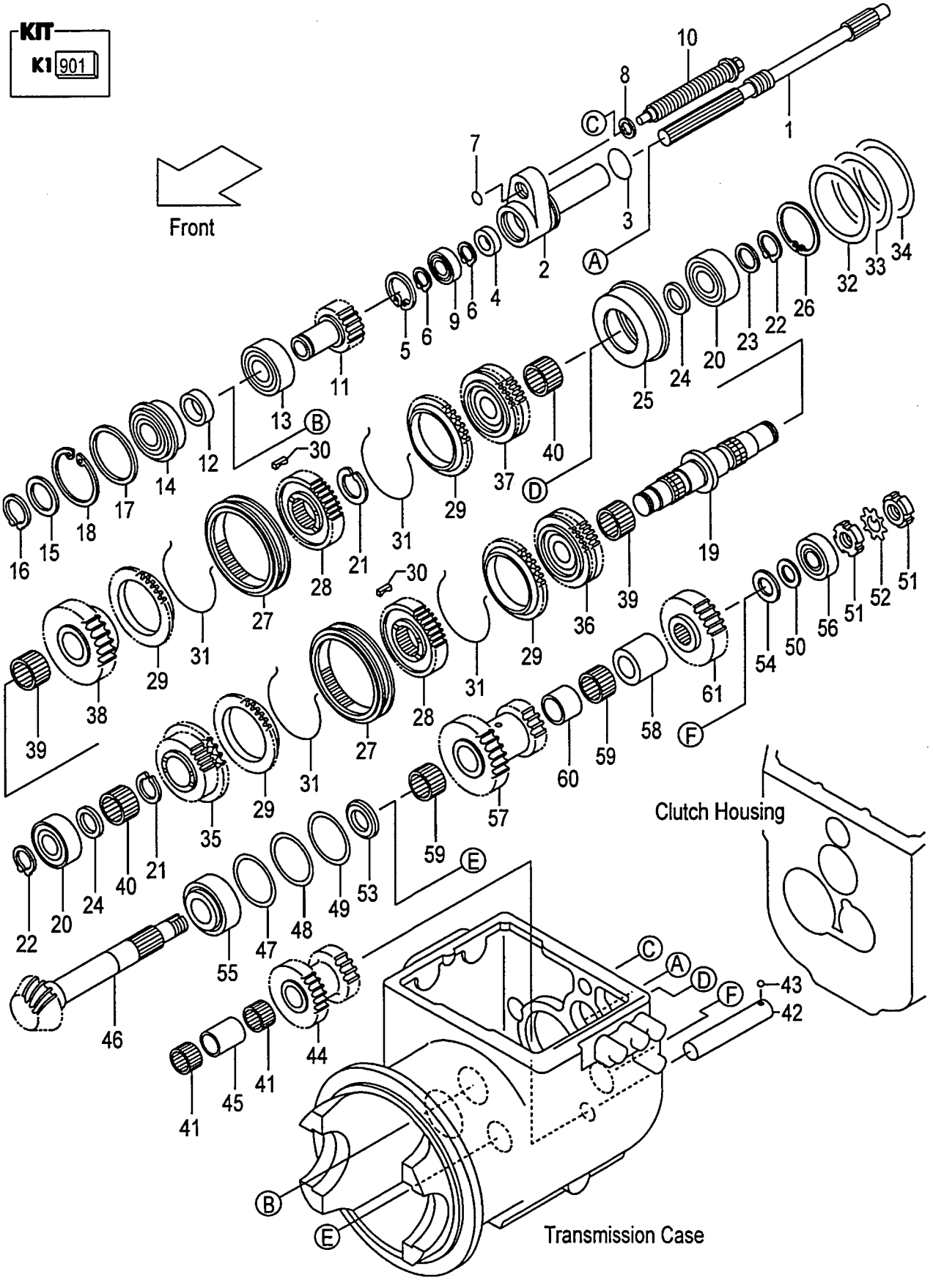

A:FD10C12 FD15C12 FD18C12

Item No	Part No.	Mark	Description		Req'd	Remarks : Serial No.
901	116A3-49811	K1	KIT,REPAIR,T/M	ﾘﾍﾟｱｷｯﾄ	1	INC.3-8,16,18,21,22,26, 39-41,47-52 & OTHERS
1	124G3-42031		SHAFT,DRIVE	ｼｬﾌﾄ	1	
2	124G3-42041		RETAINER,BRG	ﾘﾃｰﾅ	1	
3	03300-00360	*	O-RING	Oﾘﾝｸﾞ	1	
4	03211-02501	*	SEAL,OIL	ｼｰﾙ	1	
5	02110-00047	*	RING,SNAP	ｽﾅｯﾌﾟﾘﾝｸﾞ	1	
6	02100-00025	*	RING,SNAP	ｽﾅｯﾌﾟﾘﾝｸﾞ	2	
7	03300-10220	*	O-RING	Oﾘﾝｸﾞ	1	
8	10113-40541	*	WASHER	ﾜｯｼｬ	1	
9	03000-06005		BEARING	ﾍﾞｱﾘﾝｸﾞ	1	
10	11153-40041		BOLT,SLIDE	ﾎﾞﾙﾄ	1	
11	12003-42111		GEAR,INPUT	ｷﾞﾔｰ	1	
12	10113-40161		SPACER	ｽﾍﾟｰｻ	1	
13	03000-06207		BEARING	ﾍﾞｱﾘﾝｸﾞ	1	
14	03006-06207		BEARING	ﾍﾞｱﾘﾝｸﾞ	1	
15	10113-40521		SPACER	ｽﾍﾟｰｻ	1	
16	02100-00035	*	RING,SNAP	ｽﾅｯﾌﾟﾘﾝｸﾞ	1	
17	10113-40171		WASHER	ﾜｯｼｬ	1	
18	02110-00080	*	RING,SNAP	ｽﾅｯﾌﾟﾘﾝｸﾞ	1	
19	15573-42091		SHAFT,MAIN	ｼｬﾌﾄ	1	
20	15573-40241		BEARING	ﾍﾞｱﾘﾝｸﾞ	2	
21	02100-00038	*	RING,SNAP	ｽﾅｯﾌﾟﾘﾝｸﾞ	2	
22	02100-00030	*	RING,SNAP	ｽﾅｯﾌﾟﾘﾝｸﾞ	2	
23	12003-42481		SPACER	ｽﾍﾟｰｻ	1	
24	12003-42131		PLATE,THRUST	ﾌﾟﾚｰﾄ	2	
25	12003-42142		RETAINER,BRG	ﾘﾃｰﾅ	1	
26	02110-00072	*	RING,SNAP	ｽﾅｯﾌﾟﾘﾝｸﾞ	1	
A1	15573-40201		SYNCHRONIZER-ASSY	ｼﾝｸﾛﾅｲｻﾞｱｯｾﾝ	2	INC.27-31
27	15573-42041		SLEEVE	ｽﾘｰﾌﾞ	2	
28	15573-42031		HUB,CLUTCH	ﾊﾌﾞ	2	
29	15573-42001		RING,BLOCK	ﾘﾝｸﾞ	4	
30	15573-42011		INSERT	ｲﾝｻｰﾄ	6	
31	15573-42021		SPRING,INSERT	ｽﾌﾟﾘﾝｸﾞ	4	
32	127A3-42101		SHIM,T-0.1	ｼﾑ	2	
33	127A3-42111		SHIM,T-0.2	ｼﾑ	2	
34	127A3-42121		SHIM,T-0.5	ｼﾑ	1	
35	15573-42081		GEAR,HIGE-SPEED	ｷﾞﾔｰ	1	
36	116G3-42211		GEAR,LOW-SPEED	ｷﾞﾔｰ	1	
37	15573-42051		GEAR,FORWARD	ｷﾞﾔｰ	1	
38	15573-42061		GEAR,REVERSE	ｷﾞﾔｰ	1	
39	12003-42241	*	BEARING	ﾍﾞｱﾘﾝｸﾞ	2	
40	12003-42251	*	BEARING	ﾍﾞｱﾘﾝｸﾞ	2	
41	12003-42281	*	BEARING	ﾍﾞｱﾘﾝｸﾞ	2	
42	12003-42261		SHAFT,IDLER,REVERSE	ｼｬﾌﾄ	1	
43	03190-00008		BALL,STEEL	ﾎﾞｰﾙ	1	
44	12003-42271		GEAR	ｷﾞﾔｰ	1	
45	12003-42291		SPACER	ｽﾍﾟｰｻ	1	
46	12083-42301		SHAFT,OUTPUT	ｼｬﾌﾄ	1	
47	12003-42311	*	SHIM,T-0.5	ｼﾑ	1	

FIG.44 MISSION GEAR (CLUTCH)

(F6012550) ミッションギヤー

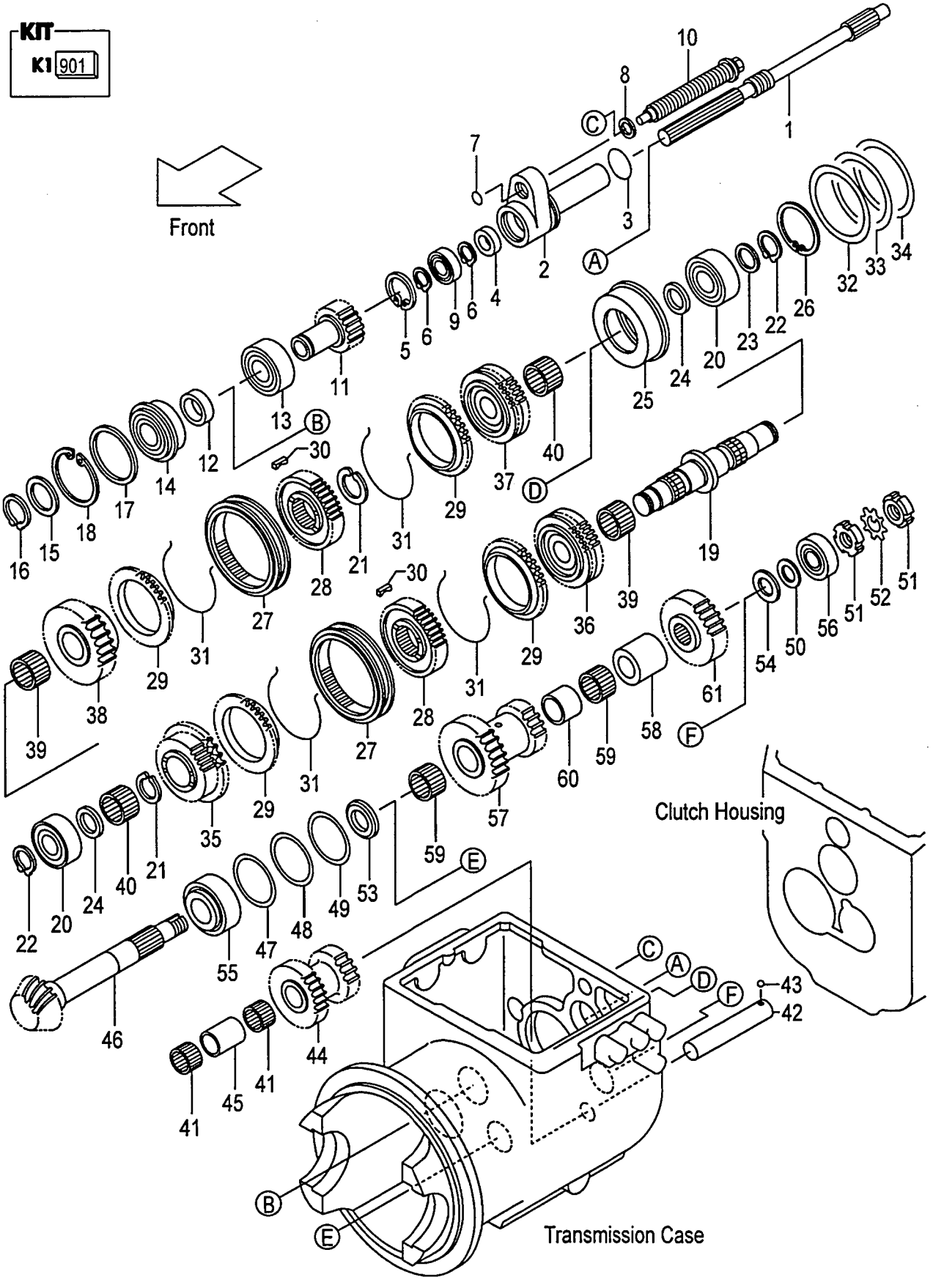

A:FD10C12 FD15C12 FD18C12

Item No	Part No.	Mark	Description		Req'd	Remarks : Serial No.
48	12003-42321	*	SHIM,T-0.2	ｼﾑ	2	
49	12003-42331	*	SHIM,T-0.1	ｼﾑ	2	
50	20113-40251	*	SPRING,REAF	ｽﾌﾟﾘﾝｸﾞ	1	
51	03192-00005	*	NUT,BRG	ﾅｯﾄ	2	
52	03192-10005	*	WASHER,BEARING	ﾜｯｼｬ	1	
53	12003-42341		PLATE,THRUST	ﾌﾟﾚｰﾄ	1	
54	12003-42361		PLATE,THRUST	ﾌﾟﾚｰﾄ	1	
-	12003-42541		PLATE,THRUST	ﾌﾟﾚｰﾄ	(1)	
-	12003-42551		PLATE,THRUST	ﾌﾟﾚｰﾄ	(1)	
55	12003-43031		BEARING	ﾍﾞｱﾘﾝｸﾞ	1	
56	12003-43001		BEARING	ﾍﾞｱﾘﾝｸﾞ	1	
57	116G3-42201		GEAR,CLUSTER	ｷﾞﾔｰ	1	
58	12003-42531		SPACER	ｽﾍﾟｰｻ	1	
59	12003-42091		BEARING	ﾍﾞｱﾘﾝｸﾞ	2	
60	12003-42381		SPACER,CLUSTER	ｽﾍﾟｰｻ	1	
61	12003-42391		GEAR,OUTPUT	ｷﾞﾔｰ	1	

FIG.45 DRIVE UNIT MOUNT (TOR-CON)

(F6012520) ﾄﾞﾗｲﾌﾞﾕﾆｯﾄﾏｳﾝﾄ

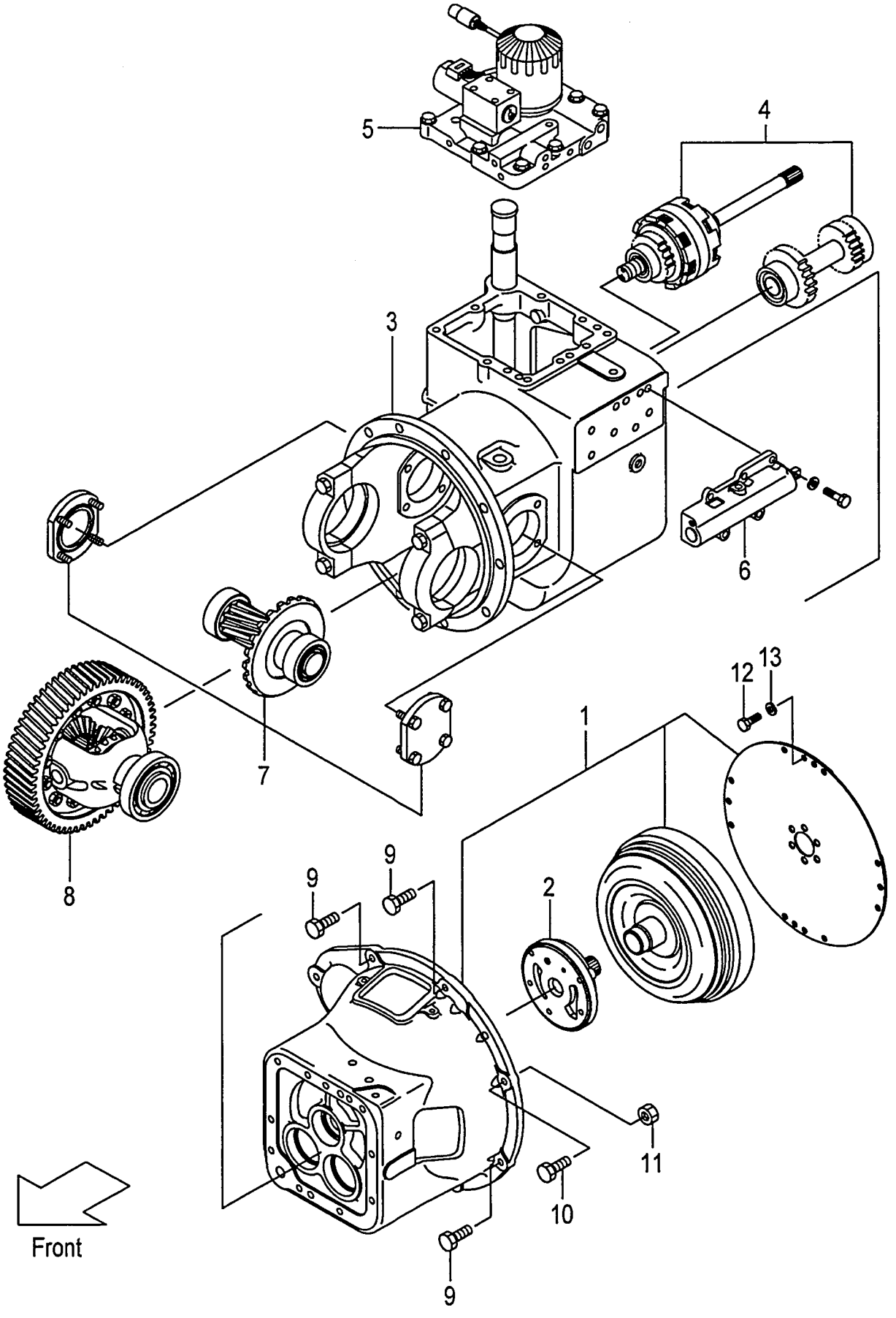

A:FD10T12 FD15T12 FD18T12

Item No	Part No.	Mark	Description		Req'd	Remarks : Serial No.
A1	119K2-50002		UNIT-ASSY,DRIVE	ﾄﾞﾗｲﾌﾞﾕﾆｯﾄｱｯｾﾝ	1	INC.1-8
-	519K3-80252		UNIT-ASSY,DRIVE	ﾄﾞﾗｲﾌﾞﾕﾆｯﾄｱｯｾﾝ	1	[EXE][EXN] INC.1-8
1	NO PART NO.		CASE,T/C	ｹｰｽ	1	SEE FIG.46
2	NO PART NO.		PUMP	ﾎﾟﾝﾌﾟ	1	SEE FIG.47
3	NO PART NO.		CASE,T/M	ｹｰｽ	1	SEE FIG.48
-	NO PART NO.		CASE,T/M	ｹｰｽ	1	[EXE][EXN]SEE FIG.48
4	NO PART NO.		PACK,CLUTCH	ﾊﾟｯｸ	1	SEE FIG.49
5	NO PART NO.		VALVE	ﾊﾞﾙﾌﾞ	1	SEE FIG.50
6	NO PART NO.		VALVE,INCHING	ﾊﾞﾙﾌﾞ	1	SEE FIG.51
7	NO PART NO.		REDUCTION	ﾘﾀﾞｸｼｮﾝ	1	SEE FIG.52
8	NO PART NO.		DIFFERENTIAL	ﾃﾞﾌｧﾚﾝｼｬﾙ	1	SEE FIG.53
9	01184-10030		BOLT	ﾎﾞﾙﾄ	7	
10	01184-10050		BOLT	ﾎﾞﾙﾄ	1	
11	01400-00010		NUT	ﾅｯﾄ	1	
12	01103-08020		BOLT	ﾎﾞﾙﾄ	12	
13	02011-00008		WASHER	ﾜｯｼｬ	12	

FIG.46 TORQUE CONVERTER CASE (TOR-CON)

(F6012560) トルクコンバータケース

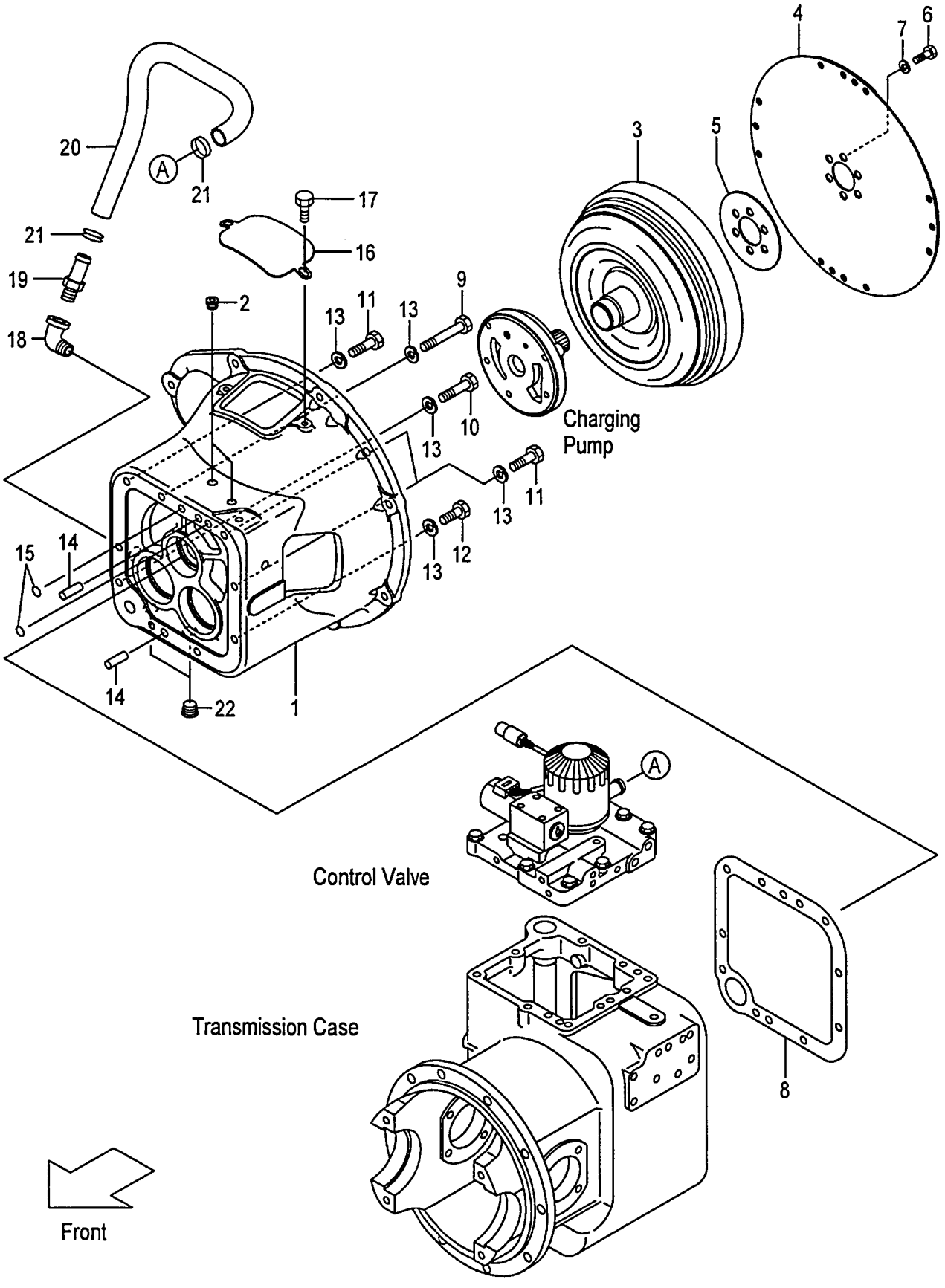

A:FD10T12 FD15T12 FD18T12

Item No	Part No.	Mark	Description		Req'd	Remarks : Serial No.
1	118H3-82001		CASE,TOR-CON	ケース	1	
2	116H3-82101		PLUG	プラグ	2	
3	119H3-80201		TORQUE-CONVERTER	トルクコンバータ	1	
4	119H3-82011		PLATE,INPUT	プレート	1	
5	118H3-82021		WASHER	ワッシャ	1	
6	12163-82621		BOLT	ボルト	6	
7	02003-20010		WASHER	ワッシャ	6	
8	11243-82501		GASKET	ガスケット	1	
9	01103-10105		BOLT	ボルト	1	
10	01103-10075		BOLT	ボルト	1	
11	01103-10050		BOLT	ボルト	3	
12	01103-10030		BOLT	ボルト	4	
13	02011-00010		WASHER	ワッシャ	9	
14	02212-12020		PIN,PARALLEL	ピン	2	
15	15583-82521		O-RING	Oリング	2	
16	131M2-52001		COVER	カバー	1	
17	01185-08020		BOLT	ボルト	2	
18	04012-00404		ELBOW	エルボ	1	
19	26267-82101		NIPPLE	ニップル	1	
20	118K3-82351		HOSE	ホース	1	
21	04911-00022		BAND	バンド	2	
22	12163-82541		PLUG	プラグ	2	

FIG.47 CHARGING PUMP (TOR-CON)

(F6012570) ﾁｬｰｼﾞﾝｸﾞﾎﾟﾝﾌﾟ

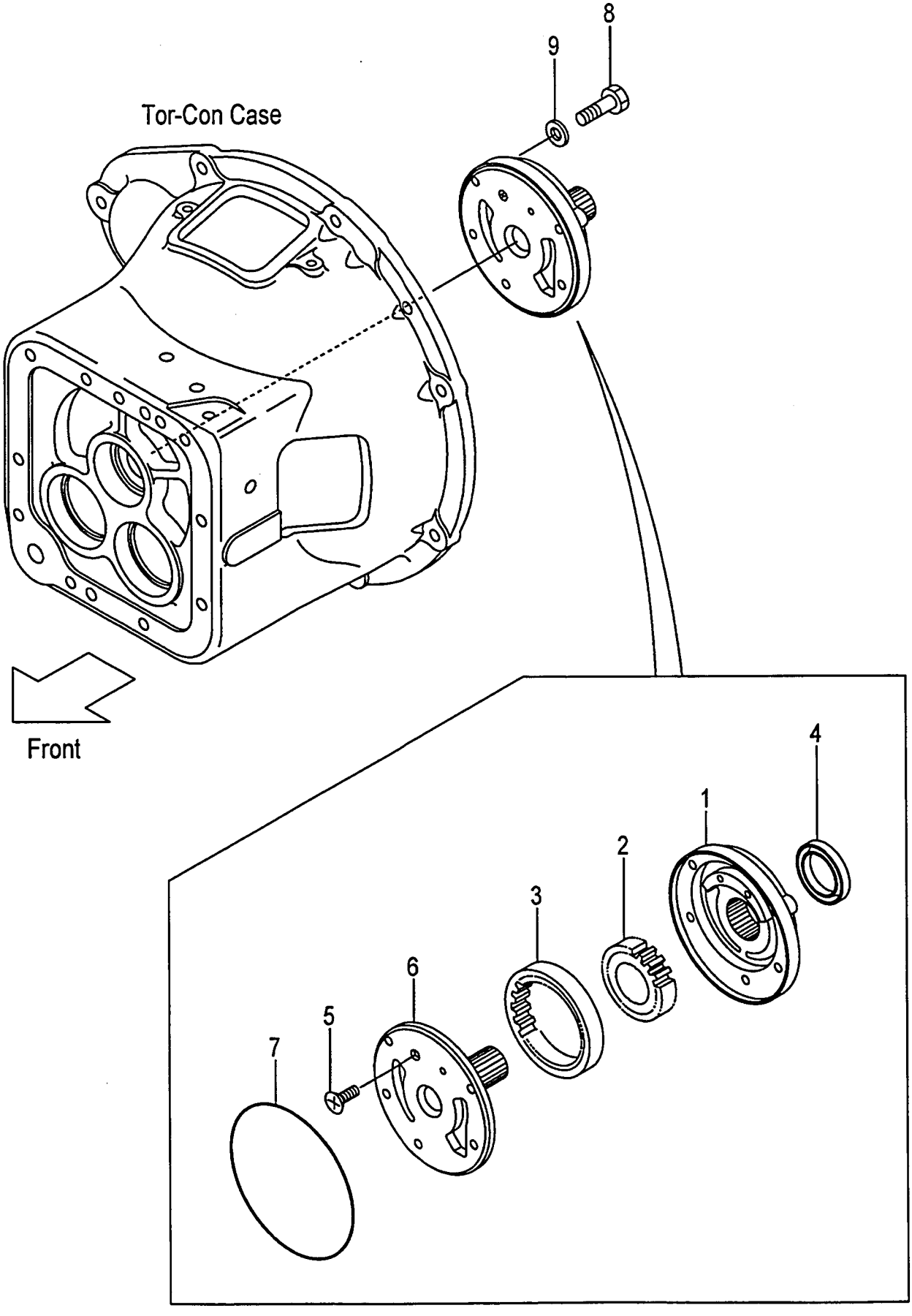

FIG.47
(F6012570)

A:FD10T12 FD15T12 FD18T12

Item No	Part No.	Mark	Description		Req'd	Remarks : Serial No.
A1	118H3-80301		PUMP-ASSY,CHARGING		1	INC.1-7
				ﾁｬｰｼﾞﾝｸﾞﾎﾟﾝﾌﾟｱｯｾﾝ		
1	BK-7341001000		CASE,PUMP	ｹｰｽ	1	
2	BK-7318002001		GEAR,DRIVE	ｷﾞﾔｰ	1	
3	BK-7318003001		GEAR,DRIVEN	ｷﾞﾔｰ	1	
4	BK-8104209010		SEAL,OIL	ｼｰﾙ	1	
5	BK-8059061000		SCREW	ｽｸﾘｭ	1	
6	BK-7345006000		SUPPORT,STARTER	ｻﾎﾟｰﾄ	1	
7	BK-81431A4700		O-RING	Oﾘﾝｸﾞ	1	
8	01103-08040		BOLT	ﾎﾞﾙﾄ	5	
9	12163-82561		PACKING	ﾊﾟｯｷﾝｸﾞ	5	

FIG.48 MISSION CASE (TOR-CON)

(F6012580) ミッションケース

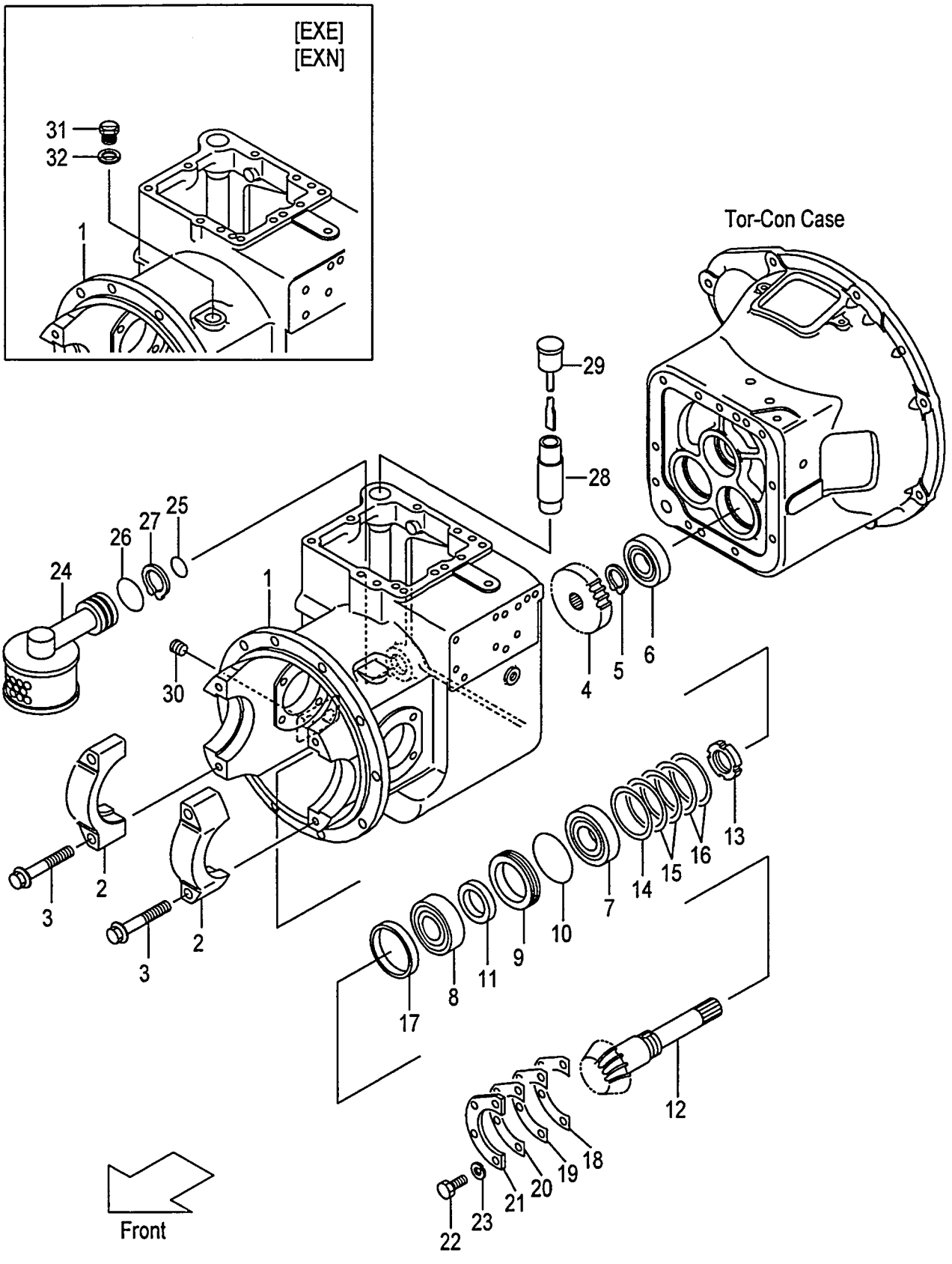

A:FD10T12 FD15T12 FD18T12

Item No	Part No.	Mark	Description		Req'd	Remarks : Serial No.
A1	15583-80231		CASE-ASSY,T/M		1	INC.1,2
				トランスミッションケースアッセン		
-	116H3-80231		CASE-ASSY,T/M		1	[EXE][EXN] INC.1,2
				トランスミッションケースアッセン		
1	NO PART NO.	#	CASE,T/M	ケース	1	
-	NO PART NO.	#	CASE,T/M	ケース	1	[EXE][EXN]
2	NO PART NO.	#	CAP,BRG	キャップ	2	
3	116G3-22001		BOLT	ボルト	4	
4	12163-42231		GEAR,OUTPUT	ギヤー	1	
5	02110-00024		RING,SNAP	スナップリング	1	
6	03000-06207		BEARING	ベアリング	1	
7	12003-43021		BEARING	ベアリング	1	
8	12003-43031		BEARING	ベアリング	1	
9	12163-82121		RETAINER,OIL-SEAL	リテーナ	1	
10	15583-82531		O-RING	Oリング	1	
11	12163-82131		SEAL,OIL	シール	1	
12	14243-82011		SHAFT,OUTPUT	シャフト	1	
13	11243-82621		NUT	ナット	1	
14	12163-82501		SHIM,T-0.5	シム	1	
15	12163-82511		SHIM,T-0.2	シム	2	
16	12163-82521		SHIM,T-0.1	シム	2	
17	12163-82191		COLLAR	カラー	1	
18	12163-82571		SHIM,T-0.1	シム	1	
19	12163-82581		SHIM,T-0.2	シム	1	
20	12163-82591		SHIM,T-0.5	シム	1	
21	12163-82151		PLATE,BRG-SUPPORT	プレート	1	
22	01103-08020		BOLT	ボルト	4	
23	02011-00008		WASHER	ワッシャ	4	
24	127M3-82151		STRAINER	ストレーナ	1	
25	15583-82541		O-RING	Oリング	1	
26	15583-82551		O-RING	Oリング	1	
27	02100-00035		RING,SNAP	スナップリング	1	
28	12163-82221		PIPE,OIL-FILL	パイプ	1	
29	12163-82232		CAP,OIL-FILL	キャップ	1	
30	12163-82541		PLUG	プラグ	2	
31	124T3-42651		BOLT	ボルト	1	[EXE][EXN]
32	124T3-42661		WASHER	ワッシャ	1	[EXE][EXN]

FIG.49 CLUTCH PACK (TOR-CON)

(F6012590) クラッチパック

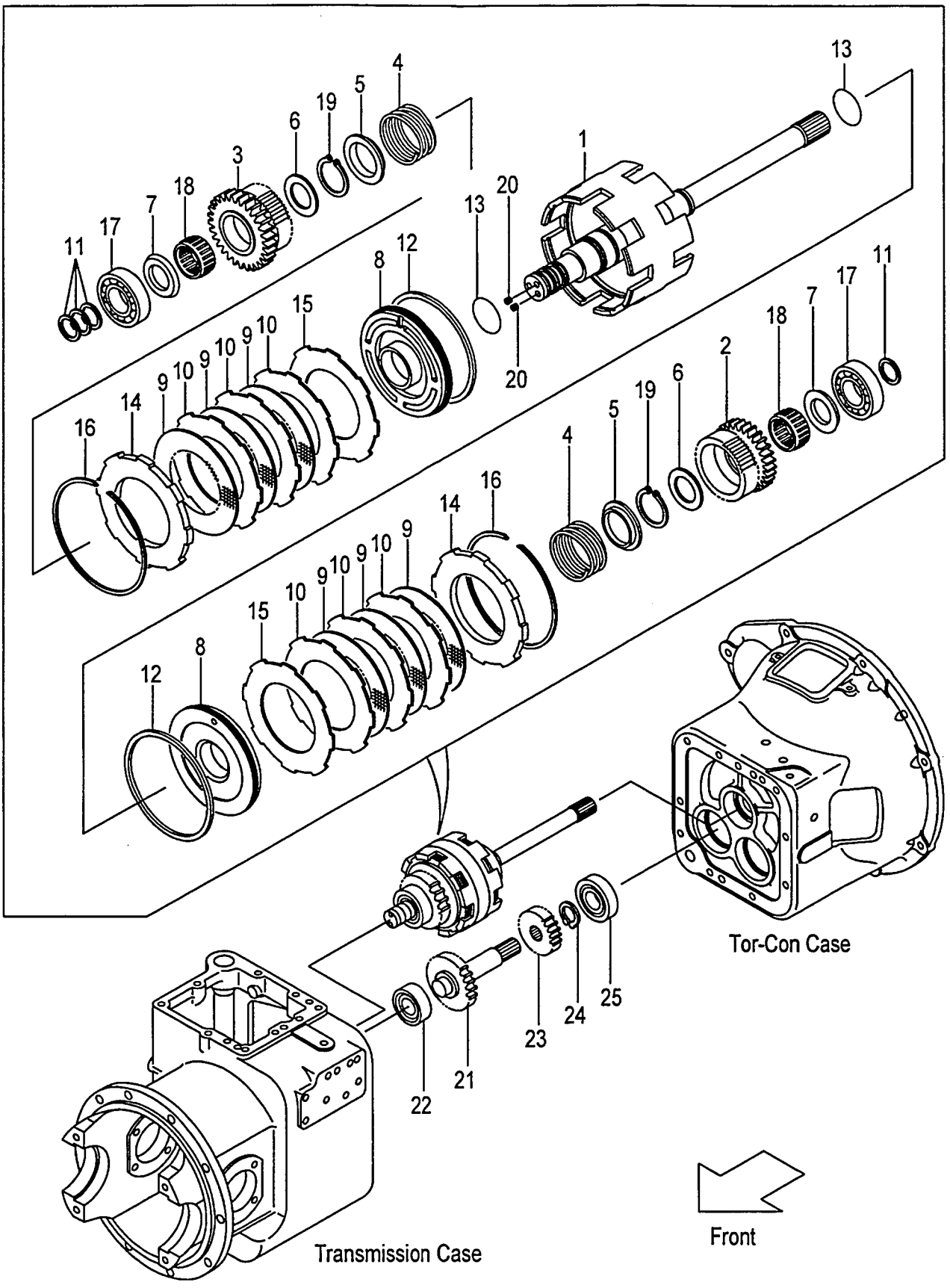

A:FD10T12 FD15T12 FD18T12

Item No	Part No.	Mark	Description		Req'd	Remarks : Serial No.
A1	118H3-80501		CLUTCH-ASSY,HYD.	ｸﾗｯﾁｱｯｾﾝ	1	INC.1-20
1	118H3-80511		SHAFT,INPUT	ｼｬﾌﾄ	1	
2	11243-82051		GEAR,FORWARD	ｷﾞﾔｰ	1	
3	11243-82061		GEAR,REVERSE	ｷﾞﾔｰ	1	
4	11243-82081		SPRING,RETURN	ｽﾌﾟﾘﾝｸﾞ	2	
5	11243-82091		SEAT,SPRING	ｼｰﾄ	2	
6	11243-82101		RING,THRUST,A	ﾘﾝｸﾞ	2	
7	123S3-82091		RING,THRUST,B	ﾘﾝｸﾞ	2	
8	11243-80221		PISTON	ﾋﾟｽﾄﾝ	2	
9	11243-82141		PLATE,FRICTION	ﾌﾟﾚｰﾄ	6	
10	123S3-82111		PLATE,SEPALATOR	ﾌﾟﾚｰﾄ	6	
11	11243-82161		RING,SEAL,A	ﾘﾝｸﾞ	4	
12	11243-82171		RING,SEAL,B	ﾘﾝｸﾞ	2	
13	11243-82211		O-RING	Oﾘﾝｸﾞ	2	
14	110G3-82001		PLATE,END	ﾌﾟﾚｰﾄ	2	
15	15583-82621		PLATE,CONICAL	ﾌﾟﾚｰﾄ	2	
16	11243-82181		RING,SNAP	ｽﾅｯﾌﾟﾘﾝｸﾞ	2	
17	03000-06206		BEARING	ﾍﾞｱﾘﾝｸﾞ	2	
18	11243-82201		BEARING	ﾍﾞｱﾘﾝｸﾞ	2	
19	02100-00040		RING,SNAP	ｽﾅｯﾌﾟﾘﾝｸﾞ	2	
20	01066-08008		PLUG	ﾌﾟﾗｸﾞ	2	
21	12163-42201		SHAFT,IDLER	ｼｬﾌﾄ	1	
22	03000-06206		BEARING	ﾍﾞｱﾘﾝｸﾞ	1	
23	12163-42211		GEAR,IDLER	ｷﾞﾔｰ	1	
24	02110-00024		RING,SNAP	ｽﾅｯﾌﾟﾘﾝｸﾞ	1	
25	03000-06207		BEARING	ﾍﾞｱﾘﾝｸﾞ	1	

FIG.50 CONTROL VALVE (TOR-CON)

(F60125A0) コントロールバルブ

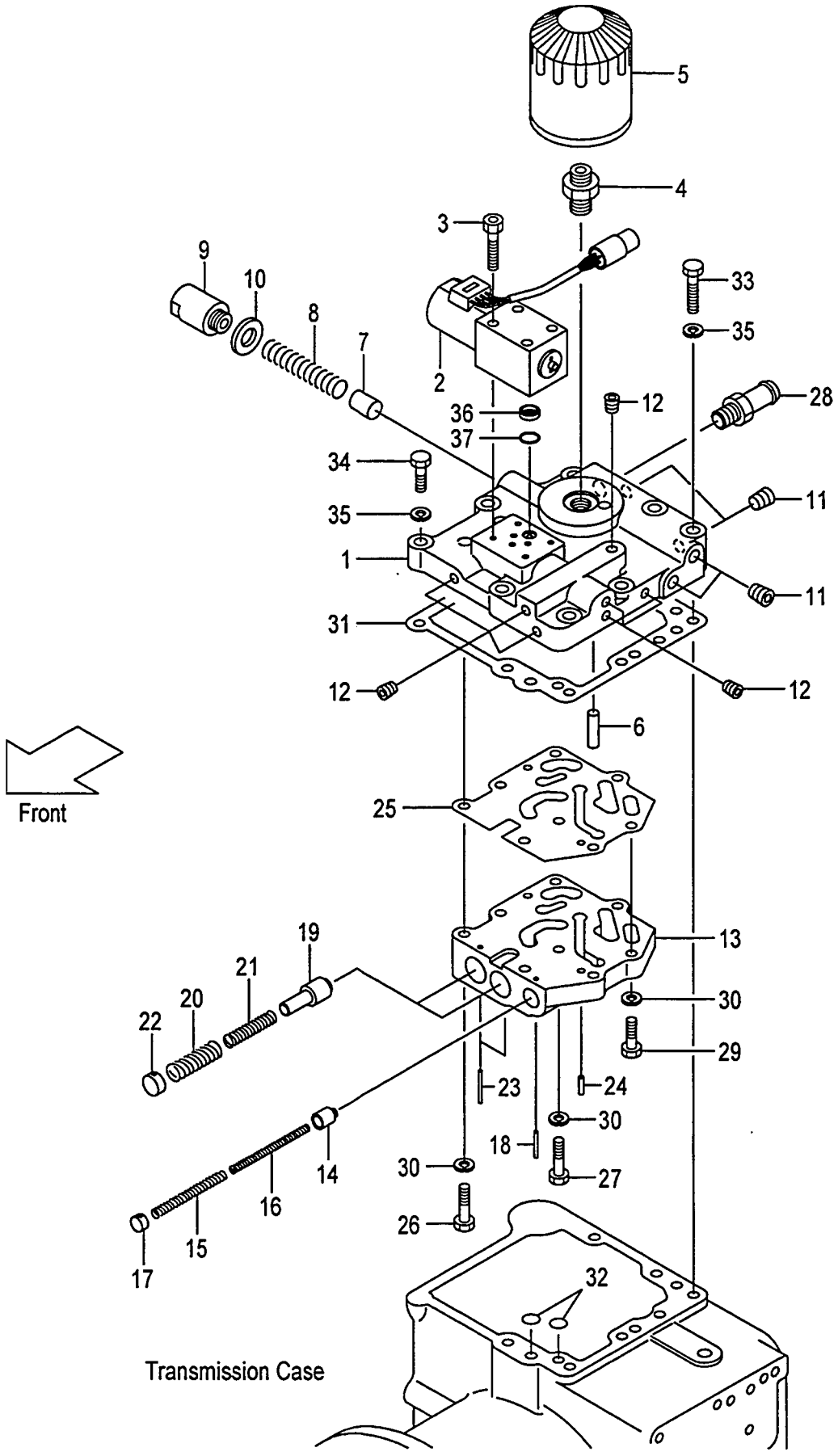

A:FD10T12 FD15T12 FD18T12

Item No	Part No.	Mark	Description		Req'd	Remarks : Serial No.
1	118K3-82301		COVER,CASE	ｶﾊﾞｰ	1	
2	135L3-82002		VALVE,SOLENOID	ﾊﾞﾙﾌﾞ	1	
3	01170-05045		BOLT	ﾎﾞﾙﾄ	4	
4	12163-82311		NIPPLE	ﾆｯﾌﾟﾙ	1	
5	12163-82302		FILTER,OIL	ﾌｨﾙﾀ	1	
6	115G3-82141		PIN	ﾋﾟﾝ	1	
7	118K3-82311		PISTON	ﾋﾟｽﾄﾝ	1	
8	12163-82331		SPRING	ｽﾌﾟﾘﾝｸﾞ	1	
9	12163-82341		CUP	ｶｯﾌﾟ	1	
10	12163-82421		PACKING	ﾊﾟｯｷﾝｸﾞ	1	
11	116H3-82101		PLUG	ﾌﾟﾗｸﾞ	4	
12	116H3-82201		PLUG	ﾌﾟﾗｸﾞ	7	
A1	118K3-80351		VALVE-ASSY,CONTROL	ｺﾝﾄﾛｰﾙﾊﾞﾙﾌﾞｱｯｾﾝ	1	INC.13-23
13	NO PART NO.	#	BODY,VALVE	ﾎﾞﾃﾞｨ	1	
14	15583-82402		PISTON	ﾋﾟｽﾄﾝ	1	
15	15583-82411		SPRING	ｽﾌﾟﾘﾝｸﾞ	1	
16	15583-82421		SPRING	ｽﾌﾟﾘﾝｸﾞ	1	
17	15583-82431		PLUG	ﾌﾟﾗｸﾞ	1	
18	02270-04035		PIN,SPRING	ﾋﾟﾝ	1	
19	15583-82441		SPOOL	ｽﾌﾟｰﾙ	2	
20	15583-82451		SPRING	ｽﾌﾟﾘﾝｸﾞ	2	
21	15583-82461		SPRING	ｽﾌﾟﾘﾝｸﾞ	2	
22	15583-82471		PLUG	ﾌﾟﾗｸﾞ	2	
23	02270-04040		PIN,SPRING	ﾋﾟﾝ	2	
24	02212-06016		PIN,PARALLEL	ﾋﾟﾝ	2	
25	118K3-82331		GASKET	ｶﾞｽｹｯﾄ	1	
26	01103-08055		BOLT	ﾎﾞﾙﾄ	3	
27	01103-08050		BOLT	ﾎﾞﾙﾄ	3	
28	23007-62061		FITTING,HOSE	ﾌｨｯﾃｨﾝｸﾞ	1	
29	01103-08035		BOLT	ﾎﾞﾙﾄ	2	
30	02011-00008		WASHER	ﾜｯｼｬ	8	
31	11243-82531		GASKET	ｶﾞｽｹｯﾄ	1	
32	15583-82571		O-RING	Oﾘﾝｸﾞ	2	
33	01103-10055		BOLT	ﾎﾞﾙﾄ	2	
34	01103-10040		BOLT	ﾎﾞﾙﾄ	6	
35	02010-00010		WASHER	ﾜｯｼｬ	8	
36	139B3-82161		FILTER,COIN	ﾌｨﾙﾀ	1	
37	139B3-82151		O-RING	Oﾘﾝｸﾞ	1	

FIG.51 INCHING VALVE (TOR-CON)

(F60125B0) インチングバルブ

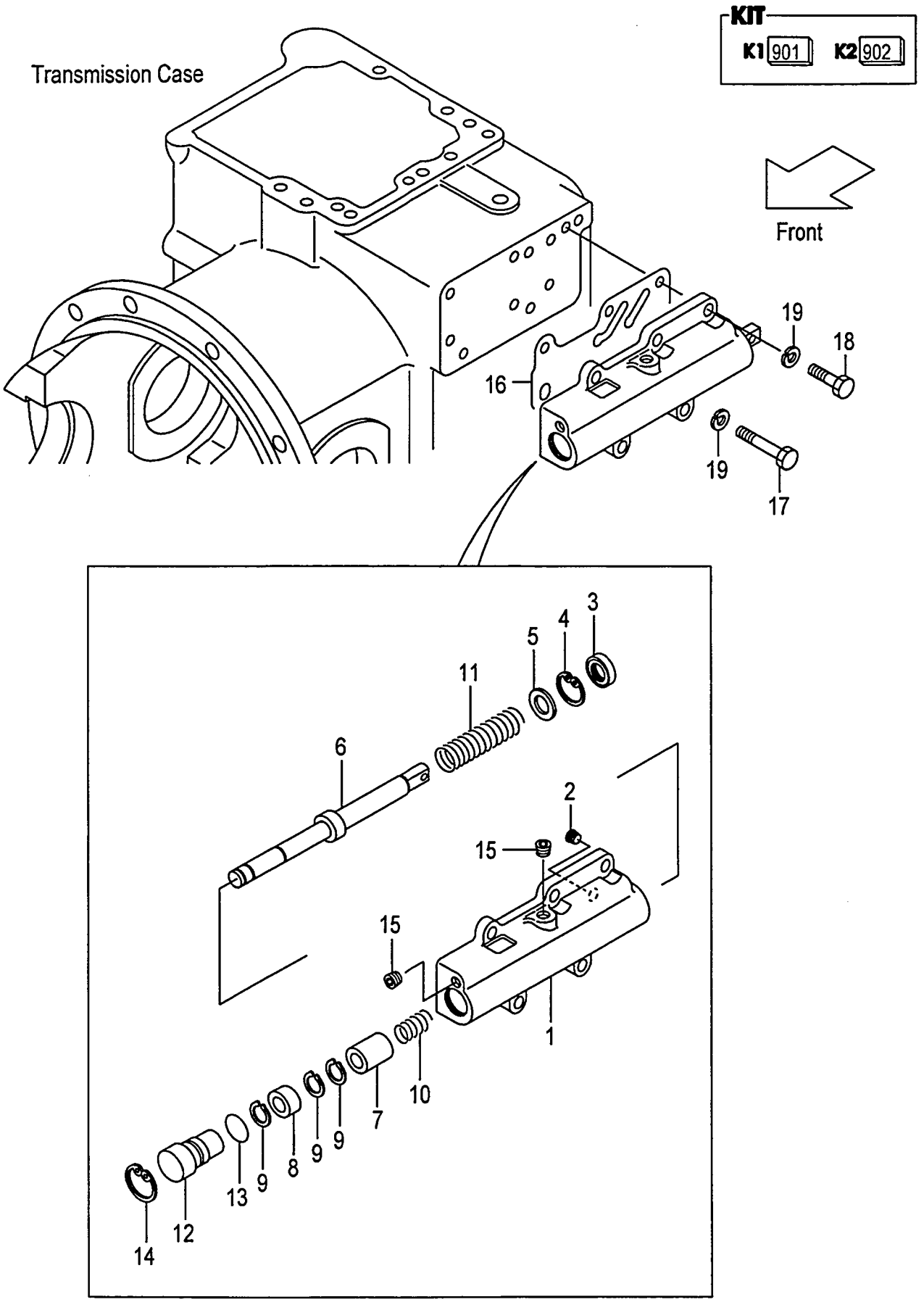

FIG.51
(F60125B0)

A:FD10T12 FD15T12 FD18T12

Item No	Part No.	Mark	Description		Req'd	Remarks : Serial No.
901	118H3-89801	K1	KIT,REPAIR,INCHING	ﾘﾍﾟｱｷｯﾄ	1	INC.3,4,13,14,16
A1	118H3-80401		VALVE-ASSY,INCHING	ﾊﾞﾙﾌﾞｱｯｾﾝ	1	INC.1-15
902	118H3-89801	K2	KIT,REPAIR,INCHING	ﾘﾍﾟｱｷｯﾄ	1	INC.1,6-8
1	118H3-82201	*	BODY,VALVE	ﾎﾞﾃﾞｨ	1	
2	15793-82861		PLUG,CHOKE	ﾌﾟﾗｸﾞ	1	
3	15943-82661	*	SEAL,OIL	ｼｰﾙ	1	
4	02110-00030	*	RING,SNAP	ｽﾅｯﾌﾟﾘﾝｸﾞ	1	
5	15943-82651		SPACER	ｽﾍﾟｰｻ	1	
6	115G3-82512	*	SPOOL,INCHING	ｽﾌﾟｰﾙ	1	
7	15793-82321	*	PLUNGER	ﾌﾟﾗﾝｼﾞｬ	1	
8	115G3-82522	*	PISTON	ﾋﾟｽﾄﾝ	1	
9	02100-00012		RING,SNAP	ｽﾅｯﾌﾟﾘﾝｸﾞ	3	
10	15793-82341		SPRING	ｽﾌﾟﾘﾝｸﾞ	1	
11	115G3-82491		SPRING	ｽﾌﾟﾘﾝｸﾞ	1	
12	118H3-82211		PLUG	ﾌﾟﾗｸﾞ	1	
13	118H3-82231	*	O-RING	Oﾘﾝｸﾞ	1	
14	02110-00028	*	RING,SNAP	ｽﾅｯﾌﾟﾘﾝｸﾞ	1	
15	116H3-82201		PLUG	ﾌﾟﾗｸﾞ	2	
16	118H3-82221	*	GASKET	ｶﾞｽｹｯﾄ	1	
17	01103-08050		BOLT	ﾎﾞﾙﾄ	2	
18	01103-08025		BOLT	ﾎﾞﾙﾄ	3	
19	02011-00008		WASHER	ﾜｯｼｬ	5	

FIG.52 REDUCTION
(F60125C0) ﾘﾀﾞｸｼｮﾝ

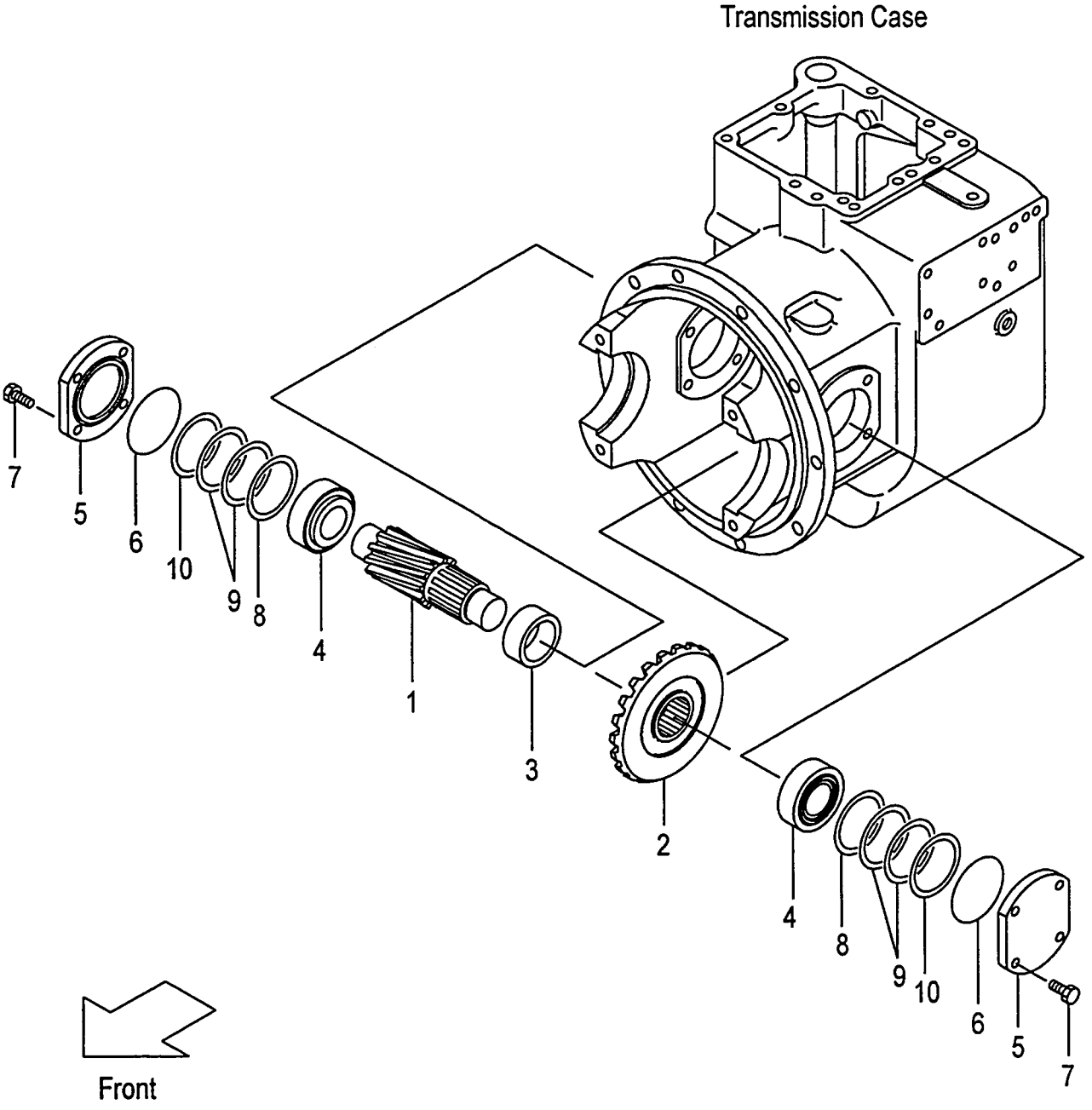

A:FD10C12 FD10T12 FD15C12 FD15T12 FD18C12 FD18T12

Item No	Part No.	Mark	Description		Req'd	Remarks : Serial No.
1	12003-22011		SHAFT,FINAL-PINION	ｼｬﾌﾄ	1	
2	12083-22031		GEAR,SPIRAL-BEVEL	ｷﾞﾔｰ	1	
3	12003-22041		SPACER	ｽﾍﾟｰｻ	1	
4	12003-43011		BEARING	ﾍﾞｱﾘﾝｸﾞ	2	
5	12003-22051		COVER,BRG	ｶﾊﾞｰ	2	
6	03310-00700		O-RING	Oﾘﾝｸﾞ	2	
7	01184-10025		BOLT	ﾎﾞﾙﾄ	8	
8	15413-22081		SHIM,T-0.5	ｼﾑ	2	
9	15413-22091		SHIM,T-0.2	ｼﾑ	4	
10	15413-22101		SHIM,T-0.1	ｼﾑ	2	

FIG.53 DIFFERENTIAL

(F60125D0) ﾃﾞｨﾌｧﾚﾝｼｬﾙ

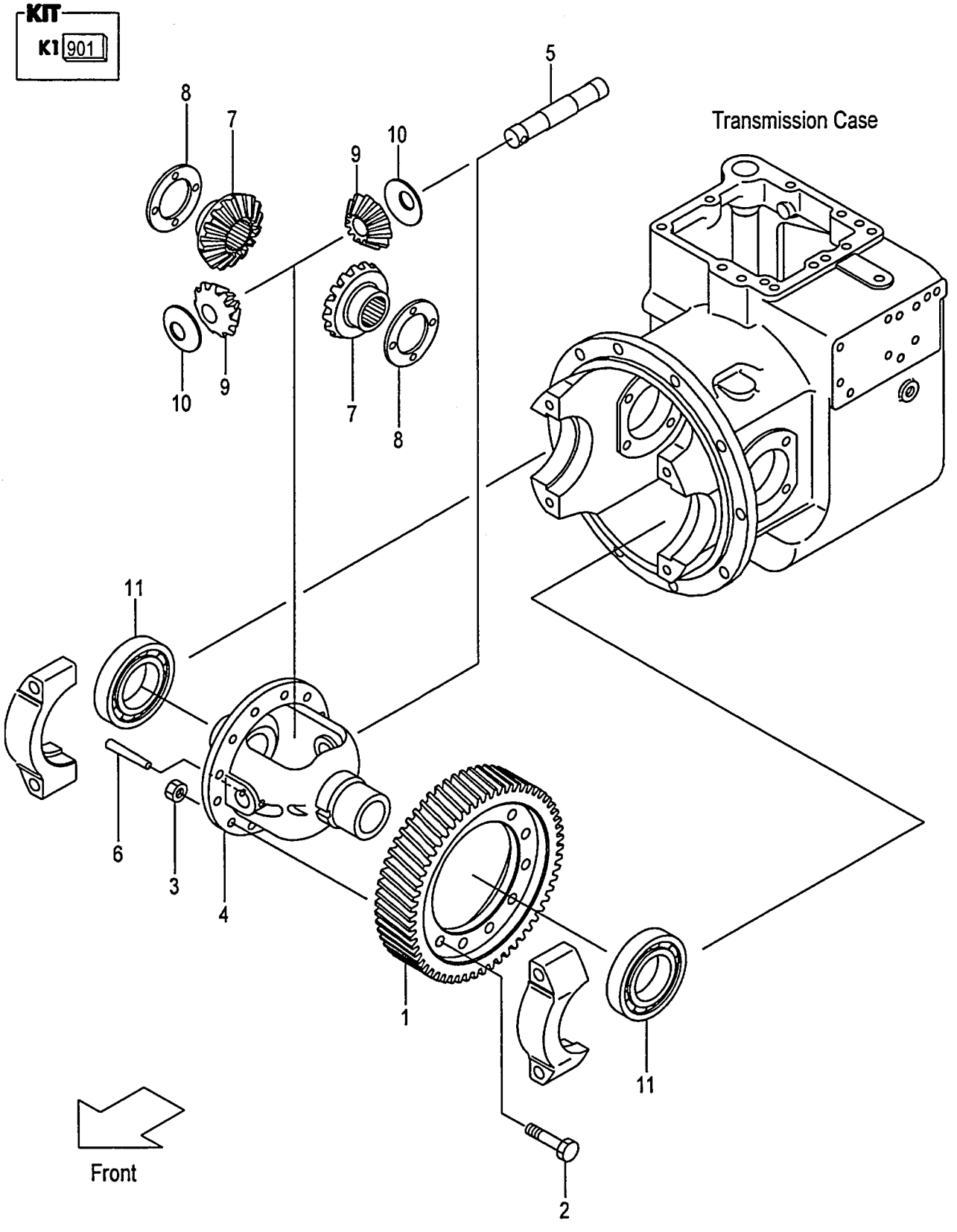

A:FD10C12 FD10T12 FD15C12 FD15T12 FD18C12 FD18T12

Item No	Part No.	Mark	Description		Req'd	Remarks : Serial No.
901	11193-50011	K1	KIT,REPAIR,CROSS	ﾘﾍﾟｱｷｯﾄ	1	INC.2-4
1	17243-53002		GEAR,RING	ｷﾞﾔｰ	1	
2	10113-50112	*	BOLT	ﾎﾞﾙﾄ	12	
3	15583-82601	*	NUT	ﾅｯﾄ	12	
4	12193-50011	*	CASE,CROSS	ｹｰｽ	1	
5	10193-50032		SHAFT,PINION	ｼｬﾌﾄ	1	
6	02242-06055		PIN,TAPER	ﾋﾟﾝ	1	
7	110F3-52001		GEAR,SIDE	ｷﾞﾔｰ	2	
8	20113-50181		WASHER,A,SIDE-GEAR	ﾜｯｼｬ	2	
-	20113-51181		WASHER,B,SIDE-GEAR	ﾜｯｼｬ	(2)	
-	20113-52181		WASHER,C,SIDE-GEAR	ﾜｯｼｬ	(2)	
-	20113-53181		WASHER,D,SIDE-GEAR	ﾜｯｼｬ	(2)	
9	110F3-52011		GEAR,PINION	ｷﾞﾔｰ	2	
10	15413-52081		WASHER,THRUST,T-1.8	ﾜｯｼｬ	2	
-	15413-52091		WASHER,THRUST,T-2.0	ﾜｯｼｬ	(2)	
-	15413-52101		WASHER,THRUST,T-2.2	ﾜｯｼｬ	(2)	
11	03000-06211		BEARING	ﾍﾞｱﾘﾝｸﾞ	2	

FIG.54 DRIVE AXLE
(F6013010) ﾄﾞﾗｲﾌﾞｱｸｽﾙ

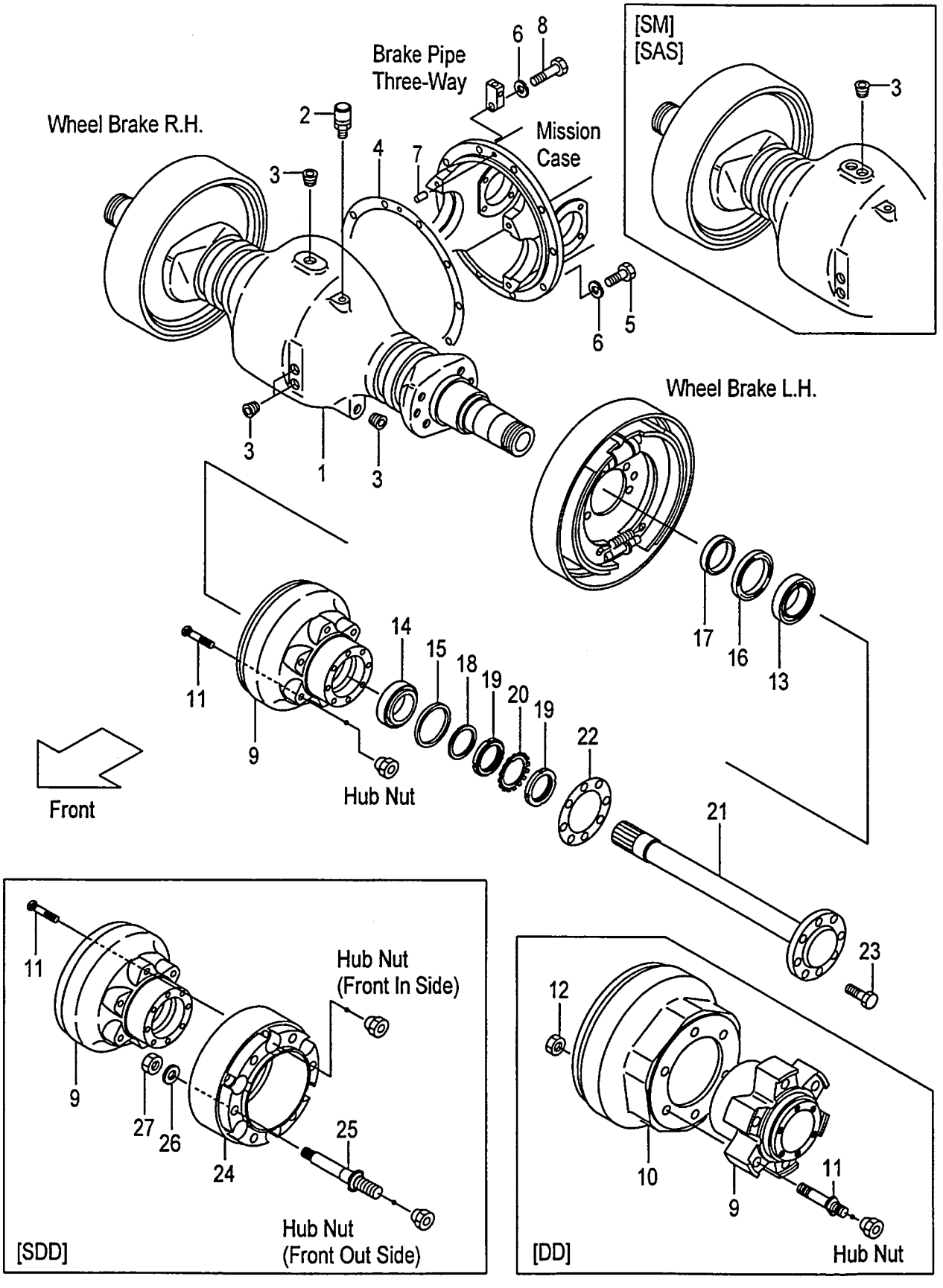

A:FD10C12 FD10T12 FD15C12 FD15T12 FD18C12 FD18T12

Item No	Part No.	Mark	Description		Req'd	Remarks : Serial No.
1	216G3-02001		HOUSING,AXLE	ﾊｳｼﾞﾝｸﾞ	1	
-	516G7-52011		HOUSING,AXLE	ﾊｳｼﾞﾝｸﾞ	1	[SM][SAS]
2	15573-42151		BREATHER,AIR	ﾌﾞﾘｰｻﾞ	1	
3	22193-03001		PLUG	ﾌﾟﾗｸﾞ	4	
4	25592-52002		PACKING	ﾊﾟｯｷﾝｸﾞ	1	
5	01100-10035		BOLT	ﾎﾞﾙﾄ	9	
6	02011-00010		WASHER	ﾜｯｼｬ	10	
7	02212-08020		PIN,PARALLEL	ﾋﾟﾝ	1	
8	01100-10050		BOLT	ﾎﾞﾙﾄ	1	
9	216G3-02051		HUB & DRUM	ﾊﾌﾞ&ﾄﾞﾗﾑ	2	
-	54237-42042		HUB,FRONT	ﾊﾌﾞ	2	[DD]
10	54237-42072		DRUM,BRAKE	ﾄﾞﾗﾑ	2	[DD]
11	216G3-02061		BOLT,HUB	ﾎﾞﾙﾄ	12	
-	54237-42061		BOLT,HUB	ﾎﾞﾙﾄ	12	[DD]
12	01400-10012		NUT	ﾅｯﾄ	12	[DD]
13	03071-30213		BEARING	ﾍﾞｱﾘﾝｸﾞ	2	
14	23453-02071		BEARING	ﾍﾞｱﾘﾝｸﾞ	2	INC.15
15	23453-02131		SEAL,OIL	ｼｰﾙ	2	
16	23653-02001		SEAL,OIL	ｼｰﾙ	2	
17	22513-02051		RETAINER	ﾘﾃｰﾅ	2	
18	23453-02091		WASHER	ﾜｯｼｬ	2	
19	03192-00012		NUT,BRG	ﾅｯﾄ	4	
20	03192-10012		WASHER,BEARING	ﾜｯｼｬ	2	
21	24843-02011		SHAFT,DRIVE	ｼｬﾌﾄ	2	
22	24843-02062		PACKING	ﾊﾟｯｷﾝｸﾞ	2	
23	24453-02061		BOLT,REAMER	ﾎﾞﾙﾄ	16	
24	54237-43001		SPACER	ｽﾍﾟｰｻ	2	[SDD]
25	54237-43011		BOLT,HUB	ﾎﾞﾙﾄ	12	[SDD]
26	02000-00012		WASHER	ﾜｯｼｬ	12	[SDD]
27	01400-10012		NUT	ﾅｯﾄ	12	[SDD]

FIG.55 WHEEL BRAKE

(F6013710) ホイールブレーキ

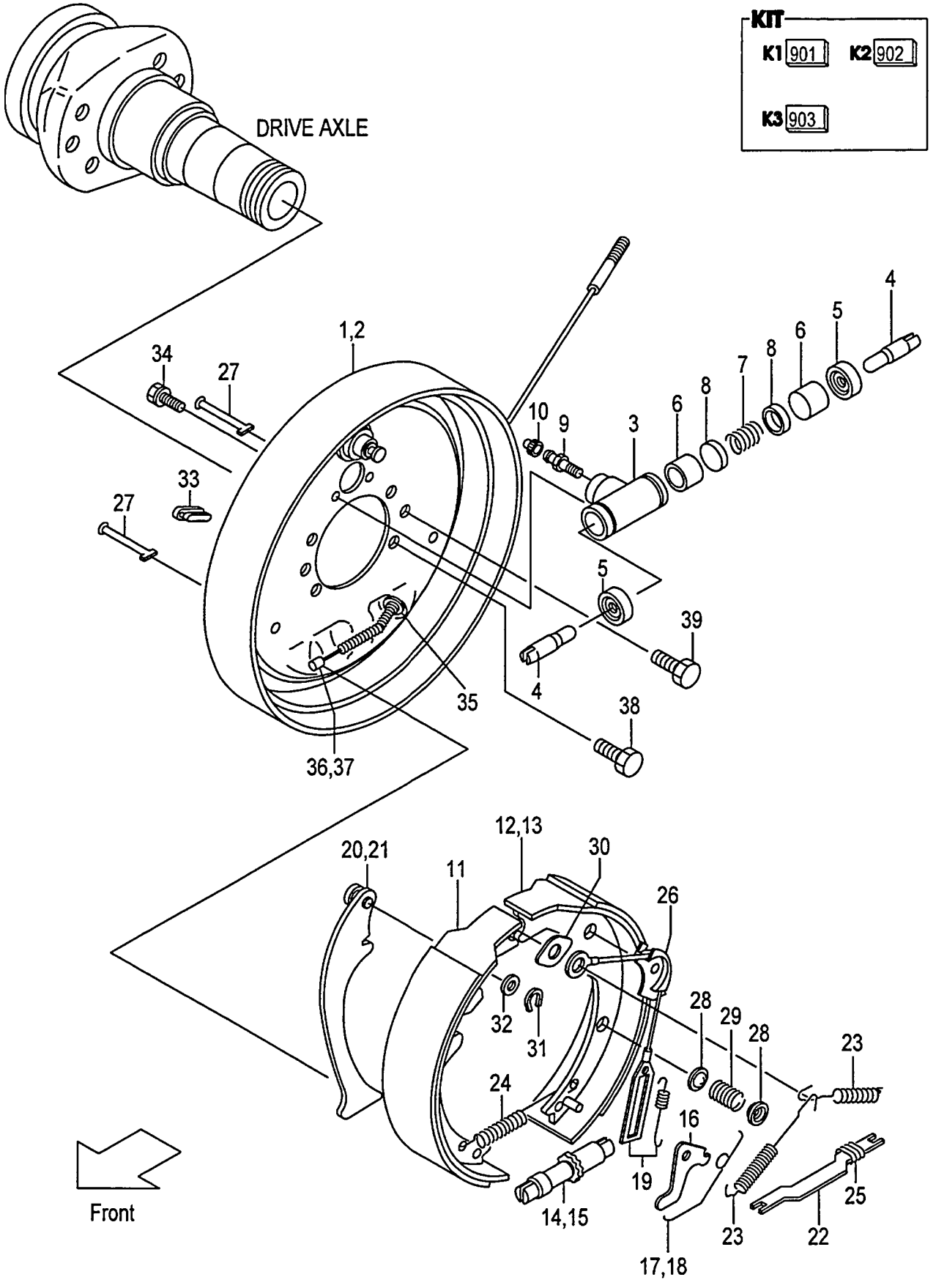

A:FD10C12 FD10T12 FD15C12 FD15T12 FD18C12 FD18T12

Item No	Part No.	Mark	Description		Req'd	Remarks : Serial No.
A1	51232-60503		BRAKE-ASSY,WHEEL,RH	ﾎｲｰﾙﾌﾞﾚｰｷｱｯｾﾝ	1	INC.1,3-12,14,16,17,19,20, 22-36
A2	51232-60513		BRAKE-ASSY,WHEEL,LH	ﾎｲｰﾙﾌﾞﾚｰｷｱｯｾﾝ	1	INC.2-11,13,15,16,18,19, 21-35,37
902	C-K2-11036-83022	K2	KIT,SHOE,RH	ｼｭｰｷｯﾄ	1	INC.11,12
903	C-K2-11036-83012	K3	KIT,SHOE,LH	ｼｭｰｷｯﾄ	1	INC.11,13
1	C-52-11031-21001		PLATE,RH	ﾌﾟﾚｰﾄ	1	
2	C-52-11031-11001		PLATE,LH	ﾌﾟﾚｰﾄ	1	
A3	C-52-11029-52000		CYL-ASSY,WHEEL	ﾎｲｰﾙｼﾘﾝﾀﾞｱｯｾﾝ	2	INC.3-10
901	23453-79801	K1	KIT,REPAIR	ﾘﾍﾟｱｷｯﾄ	2	INC.5-8
3	NO PART NO.	#	CYLINDER	ｼﾘﾝﾀﾞ	2	
4	C-52-11003-02380		LINK	ﾘﾝｸ	4	
5	NO PART NO.	#*	BOOT	ﾌﾞｰﾂ	4	
6	NO PART NO.	#*	PISTON	ﾋﾟｽﾄﾝ	4	
7	NO PART NO.	#*	SPRING	ｽﾌﾟﾘﾝｸﾞ	2	
8	NO PART NO.	#*	CUP	ｶｯﾌﾟ	4	
9	C-51-B2101-02322		SCREW	ｽｸﾘｭ	2	
10	C-52-30780-02340		CAP,BLEEDER	ｷｬｯﾌﾟ	2	
11	NO PART NO.	#*	SHOE & LINING	ｼｭｰ&ﾗｲﾆﾝｸﾞ	2	
12	NO PART NO.	#*	SHOE & LINING,RH	ｼｭｰ&ﾗｲﾆﾝｸﾞ	1	
13	NO PART NO.	#*	SHOE & LINING,LH	ｼｭｰ&ﾗｲﾆﾝｸﾞ	1	
14	C-52-11044-23300		SCREW,ADJUST,RH	ｽｸﾘｭ	1	
15	C-52-11044-13300		SCREW,ADJUST,LH	ｽｸﾘｭ	1	
16	C-52-10910-05150		LEVER	ﾚﾊﾞｰ	2	
17	C-52-11036-25160		SPRING,RH	ｽﾌﾟﾘﾝｸﾞ	1	
18	C-52-11036-15160		SPRING,LH	ｽﾌﾟﾘﾝｸﾞ	1	
19	20803-71081		SPRING & CABLE	ｽﾌﾟﾘﾝｸﾞ&ｹｰﾌﾞﾙ	2	
20	C-52-11005-44500		LEVER,PARKING,RH	ﾚﾊﾞｰ	1	
21	C-52-11005-34500		LEVER,PARKING,LH	ﾚﾊﾞｰ	1	
22	C-52-11003-64530		STRUT	ｽﾄﾗｯﾄ	2	
23	C-52-11003-04010		SPRING	ｽﾌﾟﾘﾝｸﾞ	4	
24	C-52-11036-54070		SPRING	ｽﾌﾟﾘﾝｸﾞ	2	
25	C-52-11036-54540		SPRING	ｽﾌﾟﾘﾝｸﾞ	2	
26	C-52-11003-05140		GUIDE,CABLE	ｶﾞｲﾄﾞ	2	
27	C-52-10906-04160		PIN	ﾋﾟﾝ	4	
28	C-52-10927-04130		CUP	ｶｯﾌﾟ	8	
29	C-52-11101-04111		SPRING	ｽﾌﾟﾘﾝｸﾞ	4	
30	C-52-11201-01270		PLATE,SHOE-GUIDE	ﾌﾟﾚｰﾄ	2	
31	C-52-10901-64560		RETAINER	ﾘﾃｰﾅ	2	
32	C-52-10901-64550		WASHER,WAVE	ﾜｯｼｬ	2	
33	C-52-11204-69010		COVER	ｶﾊﾞｰ	4	
34	C-90-0527-0616		BOLT	ﾎﾞﾙﾄ	4	
35	C-90-9200-0800		E-RING	Eﾘﾝｸﾞ	2	
36	C-52-11036-24606		CABLE,RH	ｹｰﾌﾞﾙ	1	
37	C-52-11031-14607		CABLE,LH	ｹｰﾌﾞﾙ	1	
38	214A3-02001		BOLT	ﾎﾞﾙﾄ	8	
39	210F3-72001		BOLT	ﾎﾞﾙﾄ	4	

FIG.56 STEERING WHEEL UNIT

(F6014110) ステアリング゛ホイールユニット

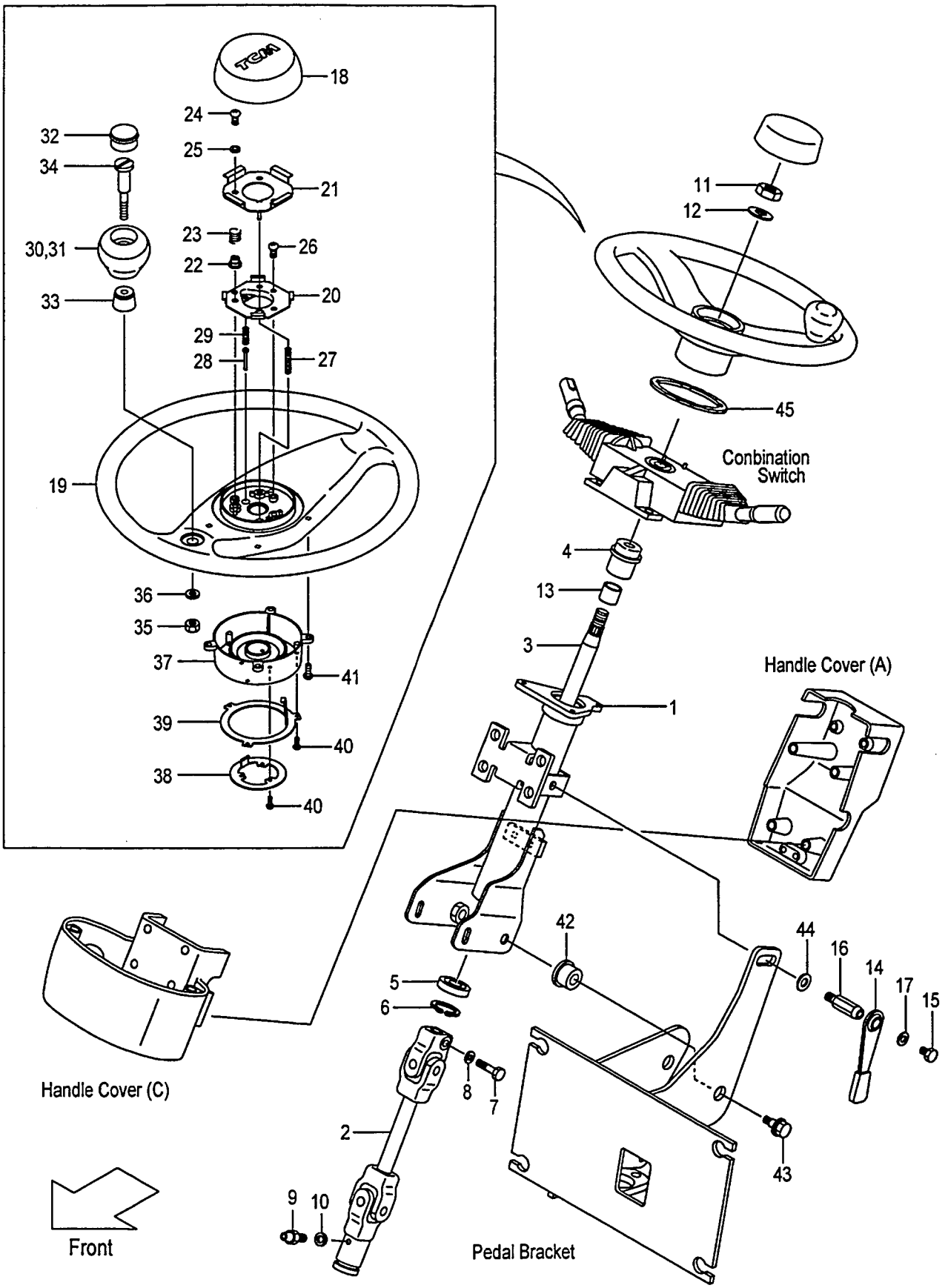

A:FD10C12 FD10T12 FD15C12 FD15T12 FD18C12 FD18T12

Item No	Part No.	Mark	Description		Req'd	Remarks : Serial No.
A1	239A4-12102		SHAFT-ASSY,STEERING	ｽﾃｱﾘﾝｸﾞｼｬﾌﾄｱｯｾﾝ	1	INC.1-13
1	239A4-12112		COLUMN	ｺﾗﾑ	1	
2	239A4-12121		JOINT,UNIVERSAL	ｼﾞｮｲﾝﾄ	1	
3	239A4-12131		SHAFT	ｼｬﾌﾄ	1	
4	NO PART NO.		BUSHING,COLUMN	ﾌﾞｯｼﾝｸﾞ	1	
5	NO PART NO.		BEARING	ﾍﾞｱﾘﾝｸﾞ	1	
6	NO PART NO.		RING,SNAP	ｽﾅｯﾌﾟﾘﾝｸﾞ	1	
7	NO PART NO.		BOLT	ﾎﾞﾙﾄ	1	
8	NO PART NO.		WASHER	ﾜｯｼｬ	1	
9	NO PART NO.		FITTING	ﾌｨｯﾃｨﾝｸﾞ	1	
10	NO PART NO.		WASHER	ﾜｯｼｬ	1	
11	01402-00014		NUT	ﾅｯﾄ	1	
12	14354-12271		WASHER	ﾜｯｼｬ	1	
13	NO PART NO.		BUSHING,DU	ﾌﾞｯｼﾝｸﾞ	1	
A2	239A4-12402		LEVER-ASSY,TILT-LOCK	ﾃｨﾙﾄﾛｯｸﾚﾊﾞｰｱｯｾﾝ	1	INC.14-17
14	239A4-12411		LEVER	ﾚﾊﾞｰ	1	
15	239A4-12441		BOLT	ﾎﾞﾙﾄ	1	
16	239A4-12431		BOLT,LOCK	ﾎﾞﾙﾄ	1	
17	214A4-12161		WASHER	ﾜｯｼｬ	1	
A3	209K4-10801		WHEEL-ASSY,STEERING	ｽﾃｱﾘﾝｸﾞﾎｲｰﾙｱｯｾﾝ	1	INC.18-41
18	216G4-12761		PAD,HORN	ﾊﾟｯﾄﾞ	1	
19	209K4-12561		WHEEL,STEERING	ﾎｲｰﾙ	1	
A4	271F4-12221		SWITCH-ASSY	ｽｲｯﾁｱｯｾﾝ	1	INC.20-25
20	NO PART NO.	#	PLATE,CONTACT,A	ﾌﾟﾚｰﾄ	1	
21	NO PART NO.	#	PLATE,CONTACT,B	ﾌﾟﾚｰﾄ	1	
22	216G4-12601		INSULATOR	ｲﾝｼｭﾚｰﾀ	3	
23	216G4-12611		SPRING,HORN	ｽﾌﾟﾘﾝｸﾞ	3	
24	216G4-12621		SCREW	ｽｸﾘｭ	3	
25	216G4-12631		WASHER,FIVER	ﾜｯｼｬ	3	
26	216G4-12641		SCREW	ｽｸﾘｭ	2	
27	216G4-12661		SPRING,EARTH	ｽﾌﾟﾘﾝｸﾞ	1	
28	271F4-12231		PLUNGER	ﾌﾟﾗﾝｼﾞｬ	1	
29	271F4-12241		SPRING,PLUNGER	ｽﾌﾟﾘﾝｸﾞ	1	
A5	216G4-12681		KNOB-ASSY	ﾉﾌﾞｱｯｾﾝ	1	INC.30-36
30	NO PART NO.	#	KNOB	ﾉﾌﾞ	1	
31	NO PART NO.	#	INSERT,KNOB	ｲﾝｻｰﾄ	1	
32	216G4-12711		CAP	ｷｬｯﾌﾟ	1	
33	NO PART NO.	#	BUSHING	ﾌﾞｯｼﾝｸﾞ	1	
34	NO PART NO.	#	SHAFT	ｼｬﾌﾄ	1	
35	216G4-12741		NUT	ﾅｯﾄ	1	
36	216G4-12751		WASHER	ﾜｯｼｬ	1	
37	209K4-12541		COVER,CANCEL-CAM	ｶﾊﾞｰ	1	
38	209K4-12531		RING,CONTACT,A	ﾘﾝｸﾞ	1	
39	209K4-12521		RING,CONTACT,B	ﾘﾝｸﾞ	1	
40	209K4-12511		SCREW	ｽｸﾘｭ	6	
41	209K4-12501		SCREW	ｽｸﾘｭ	4	
42	216G4-12101		BUSHING	ﾌﾞｯｼﾝｸﾞ	2	
43	216G4-12111		BOLT	ﾎﾞﾙﾄ	2	
44	02000-00012		WASHER	ﾜｯｼｬ	1	
45	209P4-12111		RUBBER,HANDLE-WHEEL	ﾗﾊﾞｰ	1	

FIG.57 STEERING WHEEL UNIT (TOR-CON):[EXN]

(F6014150) ステアリング゛ホイールユニット

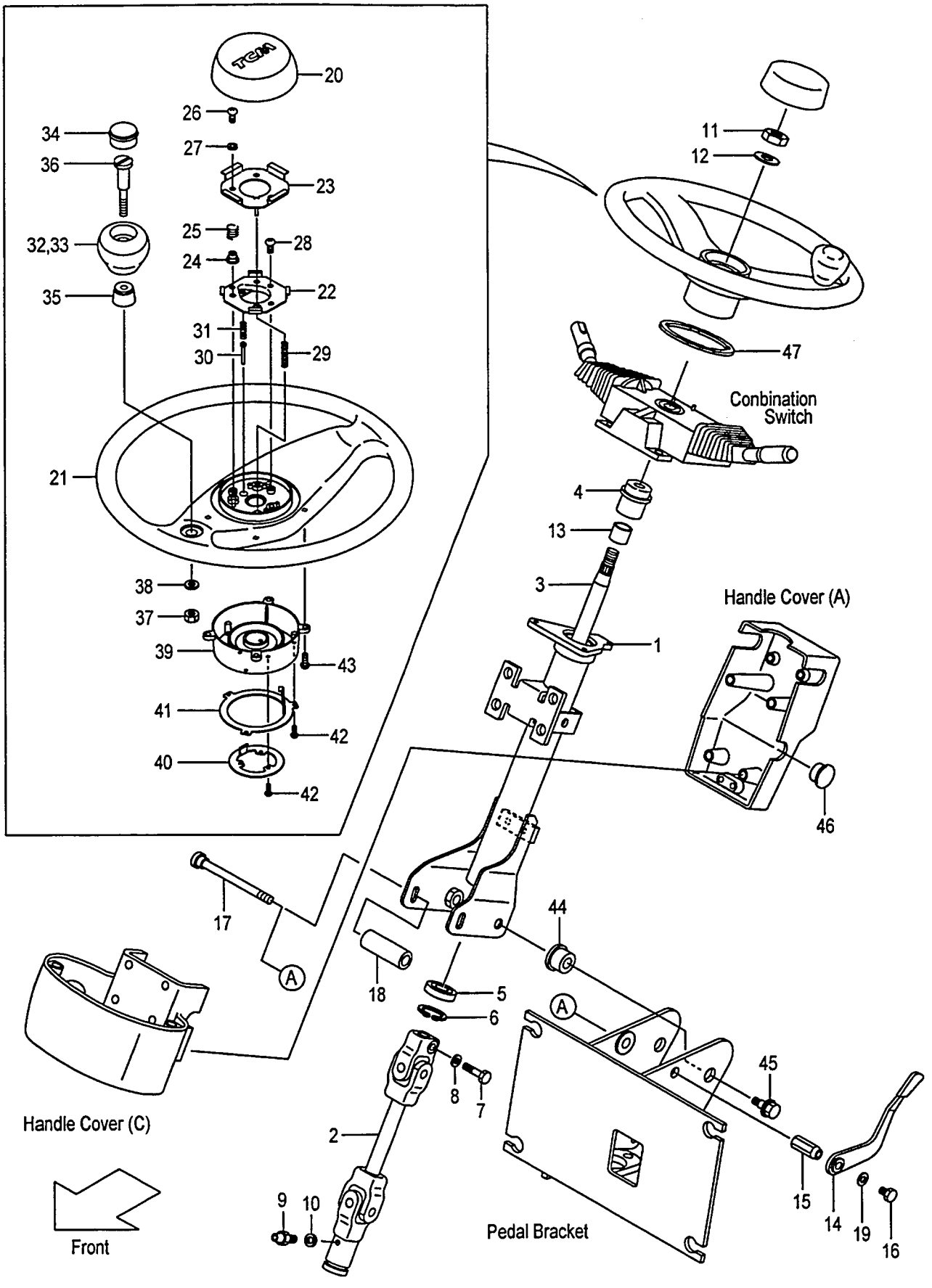

A:FD10T12 FD15T12 FD18T12

Item No	Part No.	Mark	Description		Req'd	Remarks : Serial No.
A1	539A2-60301		SHAFT-ASSY,STEERING	ｽﾃｱﾘﾝｸﾞｼｬﾌﾄｱｯｾﾝ	1	[EXN] INC.1-13
1	539A2-62301		COLUMN	ｺﾗﾑ	1	[EXN]
2	239A4-12121		JOINT,UNIVERSAL	ｼﾞｮｲﾝﾄ	1	[EXN]
3	539A2-62321		SHAFT	ｼｬﾌﾄ	1	[EXN]
4	NO PART NO.		BUSHING,COLUMN	ﾌﾞｯｼﾝｸﾞ	1	[EXN]
5	NO PART NO.		BEARING	ﾍﾞｱﾘﾝｸﾞ	1	[EXN]
6	NO PART NO.		RING,SNAP	ｽﾅｯﾌﾟﾘﾝｸﾞ	1	[EXN]
7	NO PART NO.		BOLT	ﾎﾞﾙﾄ	1	[EXN]
8	NO PART NO.		WASHER	ﾜｯｼｬ	1	[EXN]
9	NO PART NO.		FITTING	ﾌｨｯﾃｨﾝｸﾞ	1	[EXN]
10	NO PART NO.		WASHER	ﾜｯｼｬ	1	[EXN]
11	01402-00014		NUT	ﾅｯﾄ	1	[EXN]
12	14354-12271		WASHER	ﾜｯｼｬ	1	[EXN]
13	NO PART NO.		BUSHING,DU	ﾌﾞｯｼﾝｸﾞ	1	[EXN]
A2	209K4-10601		LEVER-ASSY,TILT-LOCK	ﾃｨﾙﾄﾛｯｸﾚﾊﾞｰｱｯｾﾝ	1	[EXN] INC.14-19
14	216G4-12171		LEVER	ﾚﾊﾞｰ	1	[EXN]
15	209K4-12301		NUT,LOCK	ﾅｯﾄ	1	[EXN]
16	215E4-12231		BOLT	ﾎﾞﾙﾄ	1	[EXN]
17	216G4-12151		BOLT,LOCK	ﾎﾞﾙﾄ	1	[EXN]
18	216G4-12161		COLLAR	ｶﾗｰ	1	[EXN]
19	214A4-12161		WASHER	ﾜｯｼｬ	1	[EXN]
A3	209K4-10801		WHEEL-ASSY,STEERING	ｽﾃｱﾘﾝｸﾞﾎｲｰﾙｱｯｾﾝ	1	[EXN] INC.20-43
20	216G4-12761		PAD,HORN	ﾊﾟｯﾄﾞ	1	[EXN]
21	209K4-12561		WHEEL,STEERING	ﾎｲｰﾙ	1	[EXN]
A4	271F4-12221		SWITCH-ASSY	ｽｲｯﾁｱｯｾﾝ	1	[EXN] INC.22-27
22	NO PART NO.	#	PLATE,CONTACT,A	ﾌﾟﾚｰﾄ	1	[EXN]
23	NO PART NO.	#	PLATE,CONTACT,B	ﾌﾟﾚｰﾄ	1	[EXN]
24	216G4-12601		INSULATOR	ｲﾝｼｭﾚｰﾀ	3	[EXN]
25	216G4-12611		SPRING,HORN	ｽﾌﾟﾘﾝｸﾞ	3	[EXN]
26	216G4-12621		SCREW	ｽｸﾘｭ	3	[EXN]
27	216G4-12631		WASHER,FIVER	ﾜｯｼｬ	3	[EXN]
28	216G4-12641		SCREW	ｽｸﾘｭ	2	[EXN]
29	216G4-12661		SPRING,EARTH	ｽﾌﾟﾘﾝｸﾞ	1	[EXN]
30	271F4-12231		PLUNGER	ﾌﾟﾗﾝｼﾞｬ	1	[EXN]
31	271F4-12241		SPRING,PLUNGER	ｽﾌﾟﾘﾝｸﾞ	1	[EXN]
A5	216G4-12681		KNOB-ASSY	ﾉﾌﾞｱｯｾﾝ	1	[EXN] INC.32-38
32	NO PART NO.	#	KNOB	ﾉﾌﾞ	1	[EXN]
33	NO PART NO.	#	INSERT,KNOB	ｲﾝｻｰﾄ	1	[EXN]
34	216G4-12711		CAP	ｷｬｯﾌﾟ	1	[EXN]
35	NO PART NO.	#	BUSHING	ﾌﾞｯｼﾝｸﾞ	1	[EXN]
36	NO PART NO.	#	SHAFT	ｼｬﾌﾄ	1	[EXN]
37	216G4-12741		NUT	ﾅｯﾄ	1	[EXN]
38	216G4-12751		WASHER	ﾜｯｼｬ	1	[EXN]
39	209K4-12541		COVER,CANCEL-CAM	ｶﾊﾞｰ	1	[EXN]
40	209K4-12531		RING,CONTACT,A	ﾘﾝｸﾞ	1	[EXN]
41	209K4-12521		RING,CONTACT,B	ﾘﾝｸﾞ	1	[EXN]
42	209K4-12511		SCREW	ｽｸﾘｭ	6	[EXN]
43	209K4-12501		SCREW	ｽｸﾘｭ	4	[EXN]
44	216G4-12101		BUSHING	ﾌﾞｯｼﾝｸﾞ	2	[EXN]
45	216G4-12111		BOLT	ﾎﾞﾙﾄ	2	[EXN]

FIG.57 STEERING WHEEL UNIT (TOR-CON):[EXN]

(F6014150) ステアリング゛ホイールユニット

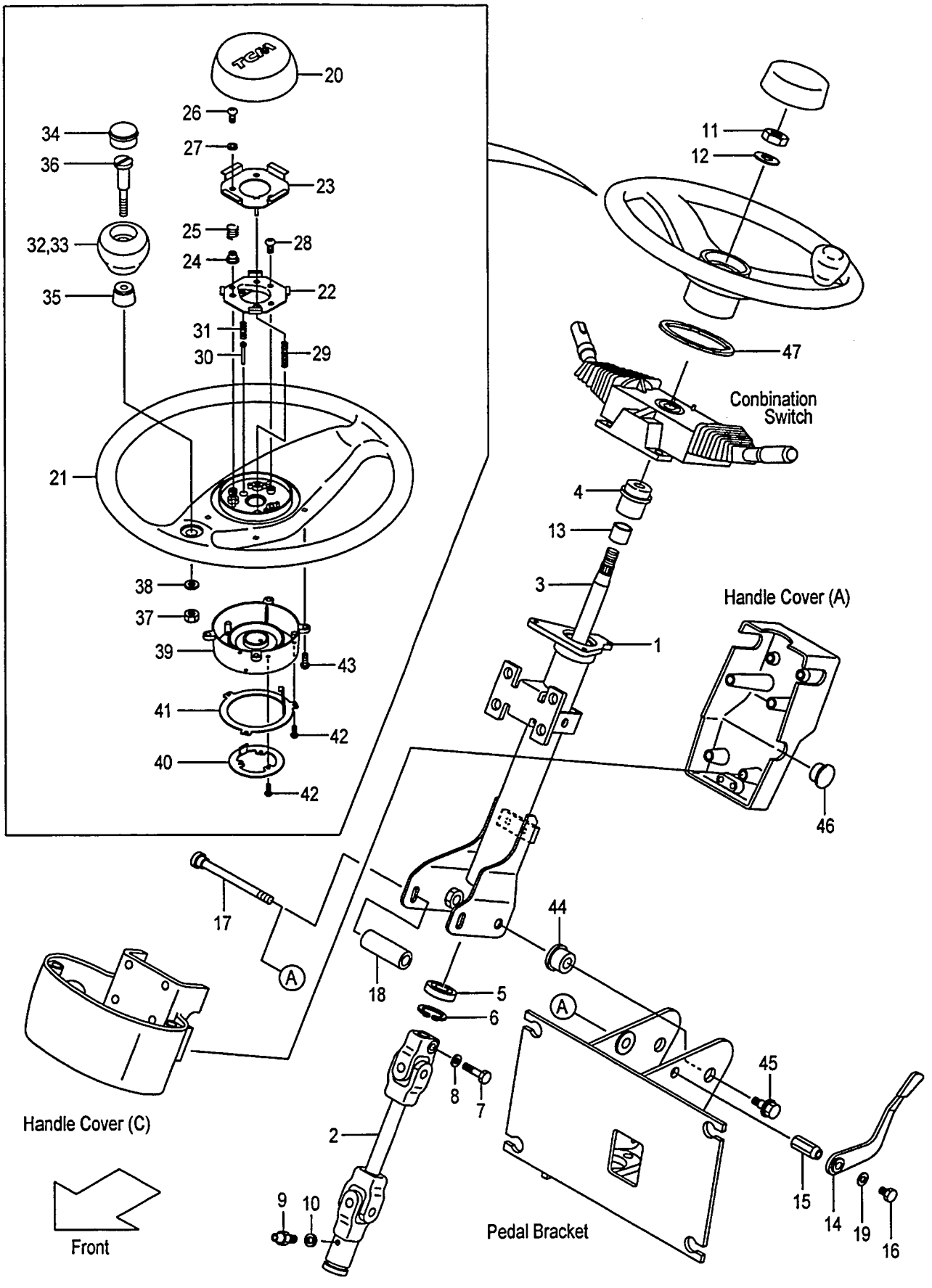

A:FD10T12 FD15T12 FD18T12

Item No	Part No.	Mark	Description	Req'd	Remarks : Serial No.
46	514A5-12701		PLUG,HOLE ﾌﾟﾗｸﾞ	1	[EXN]
47	209P4-12111		RUBBER,HANDLE-WHEEL ﾗﾊﾞｰ	1	[EXN]

FIG.58 GEAR BOX

(F6014120) ｷﾞﾔｰﾎﾞｯｸｽ

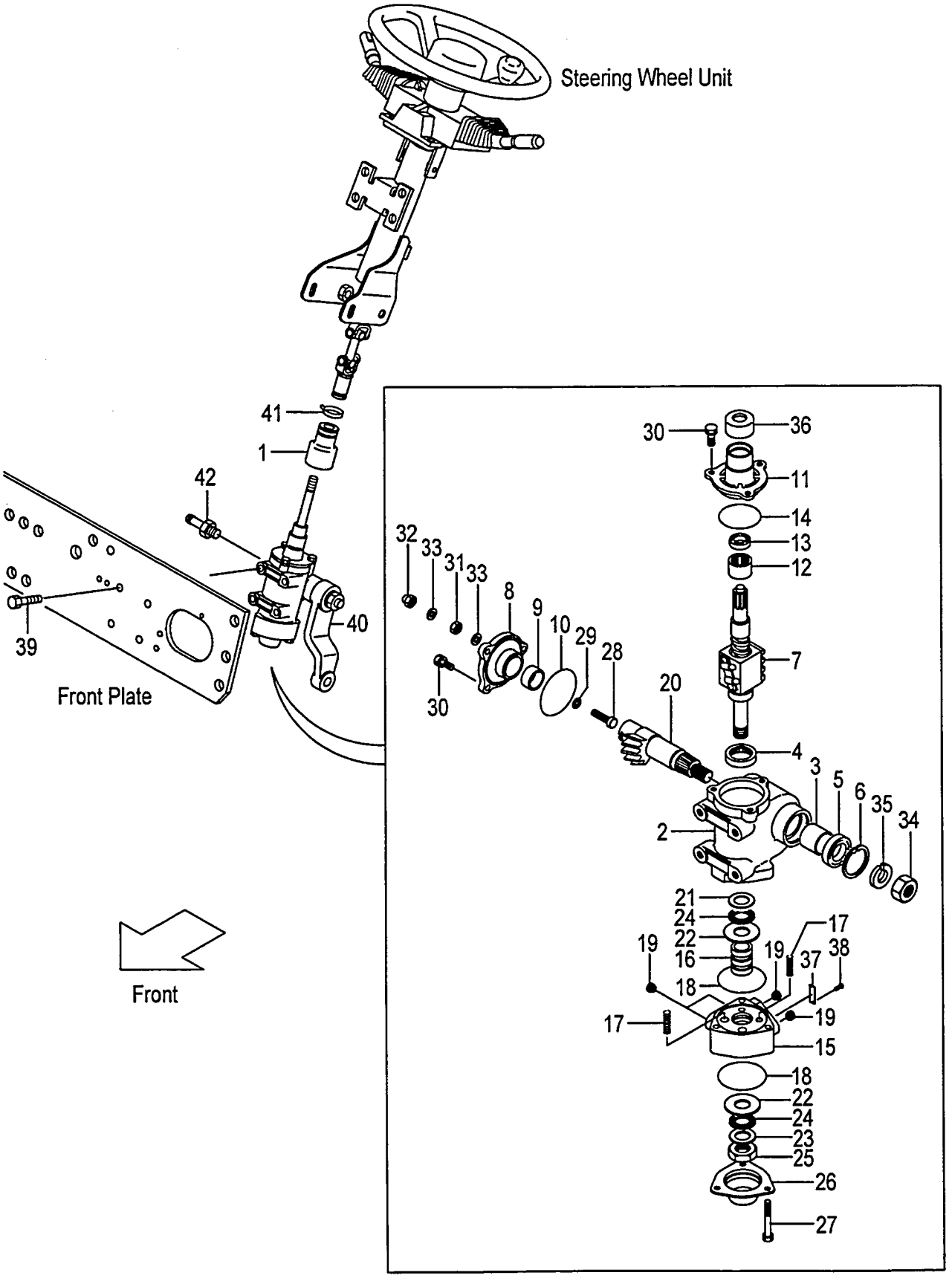

A:FD10C12 FD10T12 FD15C12 FD15T12 FD18C12 FD18T12

Item No	Part No.	Mark	Description		Req'd	Remarks : Serial No.
1	239A4-12211		BOOT,GEAR-BOX	ﾌﾞｰﾂ	1	
A1	239A4-12201		BOX-ASSY,GEAR	ｷﾞﾔｰﾎﾞｯｸｽｱｯｾﾝ	1	INC.2-38
A2	B-23643-00526		CASE-ASSY,GEAR	ｷﾞﾔｰｹｰｽｱｯｾﾝ	1	INC.2-6
A3	B-23643-00523		CASE-SUB-ASSY,GEAR	ｹｰｽｻﾌﾞｱｯｾﾝ	1	INC.2,3
2	NO PART NO.	#	CASE,GEAR	ｹｰｽ	1	
3	B-23641-03716		BUSHING	ﾌﾞｯｼﾝｸﾞ	1	
4	B-23451-02016		BEARING	ﾍﾞｱﾘﾝｸﾞ	1	
5	B-23711-01922		SEAL,OIL	ｼｰﾙ	1	
6	B-94721-38151		RING,SNAP	ｽﾅｯﾌﾟﾘﾝｸﾞ	1	
7	B-B3613-13001		SCREW,BALL	ｽｸﾘｭ	1	
A4	B-23642-00911		COVER-ASSY,SIDE	ｶﾊﾞｰｱｯｾﾝ	1	INC.8-10
8	NO PART NO.	#	COVER,SIDE	ｶﾊﾞｰ	1	
9	B-23641-03716		BUSHING	ﾌﾞｯｼﾝｸﾞ	1	
10	B-95121-06000		O-RING	Oﾘﾝｸﾞ	1	
A5	B-23643-00618		COVER-ASSY,TOP	ﾄｯﾌﾟｶﾊﾞｰｱｯｾﾝ	1	INC.11-14
11	NO PART NO.	#	COVER,TOP	ｶﾊﾞｰ	1	
12	NO PART NO.	#	BEARING	ﾍﾞｱﾘﾝｸﾞ	1	
13	NO PART NO.	#	SEAL,OIL	ｼｰﾙ	1	
14	B-95121-06000		O-RING	Oﾘﾝｸﾞ	1	
A6	B-23643-00296		HOUSING-ASSY,VALAE	ﾊﾞﾙﾌﾞﾊｳｼﾞﾝｸﾞｱｯｾﾝ	1	INC.15-19
15	NO PART NO.	#	HOUSING,VALVE	ﾊｳｼﾞﾝｸﾞ	1	
16	NO PART NO.	#	SPOOL	ｽﾌﾟｰﾙ	1	
17	14354-12321		SPRING	ｽﾌﾟﾘﾝｸﾞ	4	
18	B-95151-06300		O-RING	Oﾘﾝｸﾞ	2	
19	25594-52141		FERRULE	ﾌｪﾙｰﾙ	4	
20	B-23641-00313		SHAFT,SECTOR	ｼｬﾌﾄ	1	
21	B-23641-01609		RACE,THRUST	ﾚｰｽ	1	
22	B-23641-01610		RACE,THRUST	ﾚｰｽ	2	
23	B-23451-02212		RACE,THRUST	ﾚｰｽ	1	
24	B-23451-02106		BEARING	ﾍﾞｱﾘﾝｸﾞ	2	
25	B-23641-02227		NUT	ﾅｯﾄ	1	
26	B-23641-02508		COVER,END	ｶﾊﾞｰ	1	
27	B-23641-03314		BOLT	ﾎﾞﾙﾄ	3	
28	14354-12211		SCREW,ADJUST	ｽｸﾘｭ	1	
29	14354-12221		SHIM,ADJUST-SCREW	ｼﾑ	1	
30	B-23711-03701		BOLT	ﾎﾞﾙﾄ	6	
31	01402-10010		NUT	ﾅｯﾄ	1	
32	14354-12261		NUT,CAP	ﾅｯﾄ	1	
33	14354-12251		PACKING	ﾊﾟｯｷﾝｸﾞ	2	
34	B-23641-02218		NUT	ﾅｯﾄ	1	
35	B-94101-20512		WASHER	ﾜｯｼｬ	1	
36	B-23641-04303		COVER,DUST	ｶﾊﾞｰ	1	
37	NO PART NO.	#	PLATE,NAME	ﾌﾟﾚｰﾄ	1	
38	NO PART NO.	#	SCREW,DRIVE	ｽｸﾘｭ	2	
39	01184-12030		BOLT	ﾎﾞﾙﾄ	4	
40	239A4-22001		ARM,PITMAN	ｱｰﾑ	1	
41	04913-11200		BAND	ﾊﾞﾝﾄﾞ	1	
42	25597-62211		NIPPLE	ﾆｯﾌﾟﾙ	1	

FIG.59 GEAR BOX [(EXC,EXE,EXK,EXN)/PSS]

(F6014140) ｷﾞﾔｰﾎﾞｯｸｽ

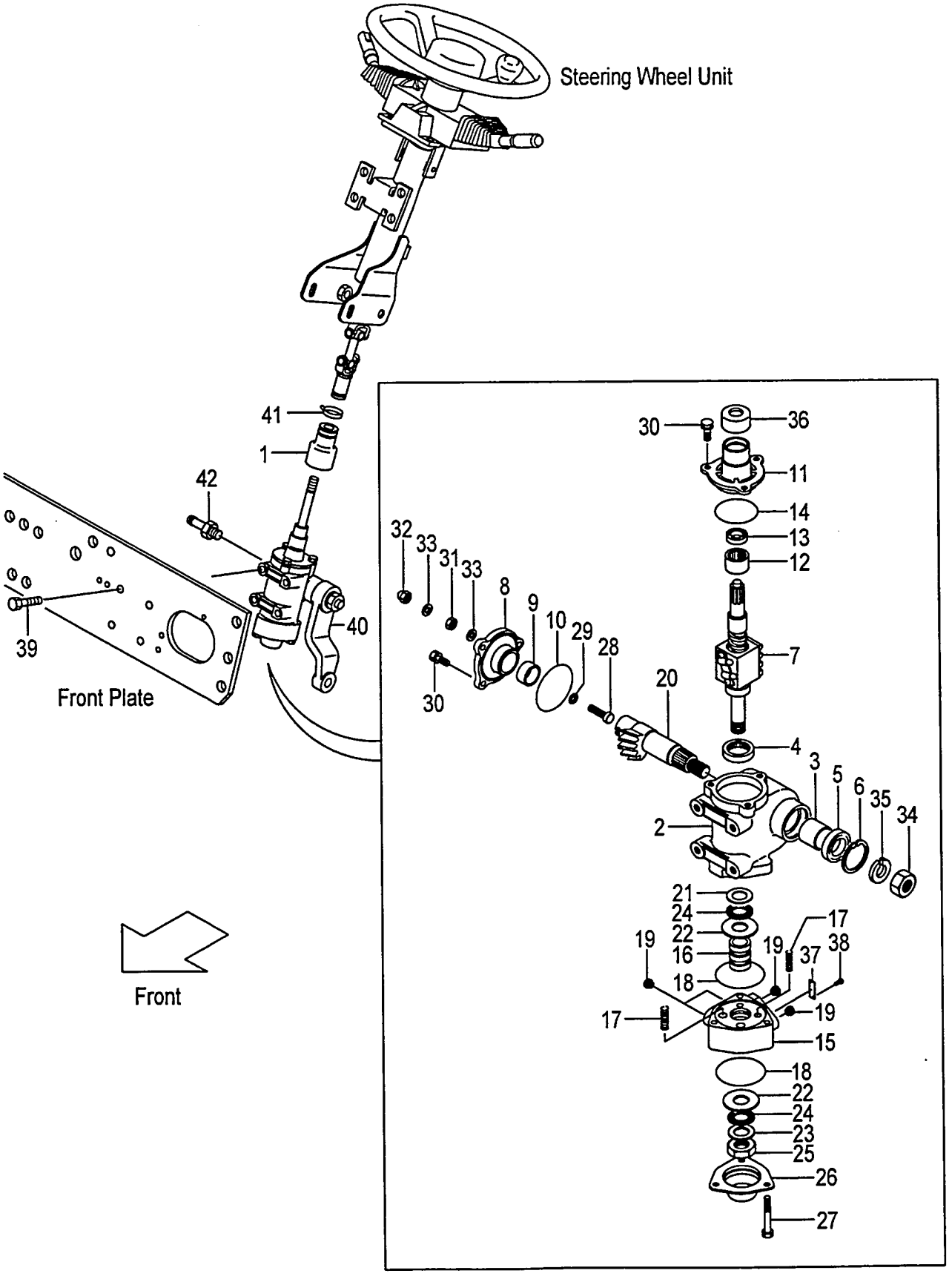

A:FD10C12 FD10T12 FD15C12 FD15T12 FD18C12 FD18T12

Item No	Part No.	Mark	Description		Req'd	Remarks : Serial No.
1	239A4-12211		BOOT,GEAR-BOX	ﾌﾞｰﾂ	1	[EXC/PSS][EXE/PSS][EXK/PSS] [EXN/PSS]
A1	239A4-12201		BOX-ASSY,GEAR	ｷﾞﾔｰﾎﾞｯｸｽｱｯｾﾝ	1	[EXC/PSS][EXE/PSS][EXK/PSS] [EXN/PSS] INC.2-38
A2	B-23643-00526		CASE-ASSY,GEAR	ｷﾞﾔｰｹｰｽｱｯｾﾝ	1	[EXC/PSS][EXE/PSS][EXK/PSS] [EXN/PSS] INC.2-6
A3	B-23643-00523		CASE-SUB-ASSY,GEAR	ｹｰｽｻﾌﾞｱｯｾﾝ	1	[EXC/PSS][EXE/PSS][EXK/PSS] [EXN/PSS] INC.2,3
2	NO PART NO.	#	CASE,GEAR	ｹｰｽ	1	[EXC/PSS][EXE/PSS][EXK/PSS] [EXN/PSS]
3	B-23641-03716		BUSHING	ﾌﾞｯｼﾝｸﾞ	1	[EXC/PSS][EXE/PSS][EXK/PSS] [EXN/PSS]
4	B-23451-02016		BEARING	ﾍﾞｱﾘﾝｸﾞ	1	[EXC/PSS][EXE/PSS][EXK/PSS] [EXN/PSS]
5	B-23711-01922		SEAL,OIL	ｼｰﾙ	1	[EXC/PSS][EXE/PSS][EXK/PSS] [EXN/PSS]
6	B-94721-38151		RING,SNAP	ｽﾅｯﾌﾟﾘﾝｸﾞ	1	[EXC/PSS][EXE/PSS][EXK/PSS] [EXN/PSS]
7	B-B3613-13001		SCREW,BALL	ｽｸﾘｭ	1	[EXC/PSS][EXE/PSS][EXK/PSS] [EXN/PSS]
A4	B-23642-00911		COVER-ASSY,SIDE	ｶﾊﾞｰｱｯｾﾝ	1	[EXC/PSS][EXE/PSS][EXK/PSS] [EXN/PSS] INC.8-10
8	NO PART NO.	#	COVER,SIDE	ｶﾊﾞｰ	1	[EXC/PSS][EXE/PSS][EXK/PSS] [EXN/PSS]
9	B-23641-03716		BUSHING	ﾌﾞｯｼﾝｸﾞ	1	[EXC/PSS][EXE/PSS][EXK/PSS] [EXN/PSS]
10	B-95121-06000		O-RING	Oﾘﾝｸﾞ	1	[EXC/PSS][EXE/PSS][EXK/PSS] [EXN/PSS]
A5	B-23643-00618		COVER-ASSY,TOP	ﾄｯﾌﾟｶﾊﾞｰｱｯｾﾝ	1	[EXC/PSS][EXE/PSS][EXK/PSS] [EXN/PSS] INC.11-14
11	NO PART NO.	#	COVER,TOP	ｶﾊﾞｰ	1	[EXC/PSS][EXE/PSS][EXK/PSS] [EXN/PSS]
12	NO PART NO.	#	BEARING	ﾍﾞｱﾘﾝｸﾞ	1	[EXC/PSS][EXE/PSS][EXK/PSS] [EXN/PSS]
13	NO PART NO.	#	SEAL,OIL	ｼｰﾙ	1	[EXC/PSS][EXE/PSS][EXK/PSS] [EXN/PSS]
14	B-95121-06000		O-RING	Oﾘﾝｸﾞ	1	[EXC/PSS][EXE/PSS][EXK/PSS] [EXN/PSS]
A6	B-23643-00296		HOUSING-ASSY,VALAE	ﾊﾞﾙﾌﾞﾊｳｼﾞﾝｸﾞｱｯｾﾝ	1	[EXC/PSS][EXE/PSS][EXK/PSS] [EXN/PSS] INC.15-19
15	NO PART NO.	#	HOUSING,VALVE	ﾊｳｼﾞﾝｸﾞ	1	[EXC/PSS][EXE/PSS][EXK/PSS] [EXN/PSS]
16	NO PART NO.	#	SPOOL	ｽﾌﾟｰﾙ	1	[EXC/PSS][EXE/PSS][EXK/PSS] [EXN/PSS]
17	14354-12321		SPRING	ｽﾌﾟﾘﾝｸﾞ	4	[EXC/PSS][EXE/PSS][EXK/PSS] [EXN/PSS]
18	B-95151-06300		O-RING	Oﾘﾝｸﾞ	2	[EXC/PSS][EXE/PSS][EXK/PSS] [EXN/PSS]
19	25594-52141		FERRULE	ﾌｪﾙｰﾙ	4	[EXC/PSS][EXE/PSS][EXK/PSS] [EXN/PSS]

FIG.59 GEAR BOX [(EXC,EXE,EXK,EXN)/PSS]

(F6014140) ｷﾞﾔｰﾎﾞｯｸｽ

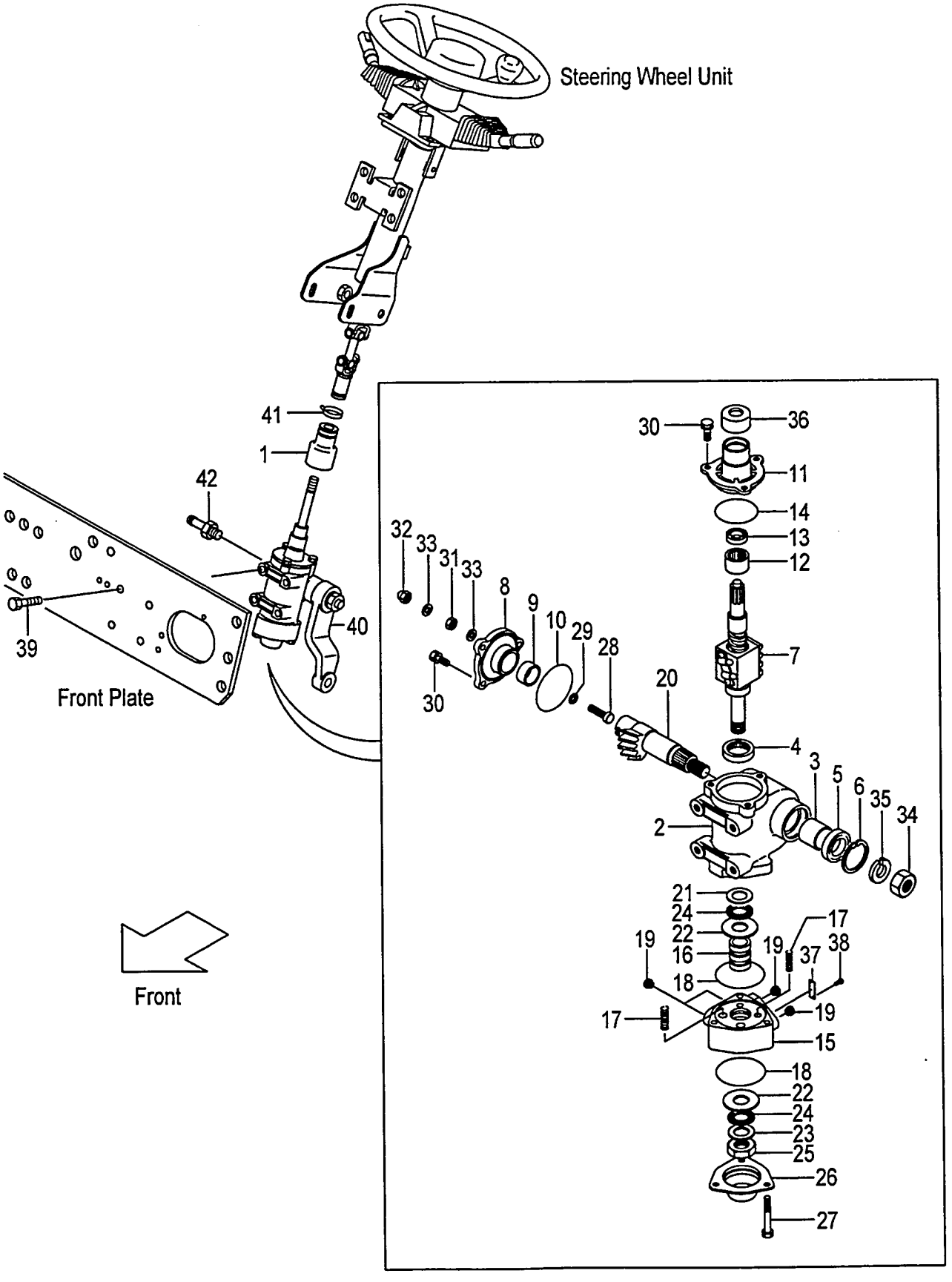

A:FD10C12 FD10T12 FD15C12 FD15T12 FD18C12 FD18T12

Item No	Part No.	Mark	Description		Req'd	Remarks : Serial No.
20	B-23641-00313		SHAFT,SECTOR	ｼｬﾌﾄ	1	[EXC/PSS][EXE/PSS][EXK/PSS] [EXN/PSS]
21	B-23641-01609		RACE,THRUST	ﾚｰｽ	1	[EXC/PSS][EXE/PSS][EXK/PSS] [EXN/PSS]
22	B-23641-01610		RACE,THRUST	ﾚｰｽ	2	[EXC/PSS][EXE/PSS][EXK/PSS] [EXN/PSS]
23	B-23451-02212		RACE,THRUST	ﾚｰｽ	1	[EXC/PSS][EXE/PSS][EXK/PSS] [EXN/PSS]
24	B-23451-02106		BEARING	ﾍﾞｱﾘﾝｸﾞ	2	[EXC/PSS][EXE/PSS][EXK/PSS] [EXN/PSS]
25	B-23641-02227		NUT	ﾅｯﾄ	1	[EXC/PSS][EXE/PSS][EXK/PSS] [EXN/PSS]
26	B-23641-02508		COVER,END	ｶﾊﾞｰ	1	[EXC/PSS][EXE/PSS][EXK/PSS] [EXN/PSS]
27	B-23641-03314		BOLT	ﾎﾞﾙﾄ	3	[EXC/PSS][EXE/PSS][EXK/PSS] [EXN/PSS]
28	14354-12211		SCREW,ADJUST	ｽｸﾘｭ	1	[EXC/PSS][EXE/PSS][EXK/PSS] [EXN/PSS]
29	14354-12221		SHIM,ADJUST-SCREW	ｼﾑ	1	[EXC/PSS][EXE/PSS][EXK/PSS] [EXN/PSS]
30	B-23711-03701		BOLT	ﾎﾞﾙﾄ	6	[EXC/PSS][EXE/PSS][EXK/PSS] [EXN/PSS]
31	01402-10010		NUT	ﾅｯﾄ	1	[EXC/PSS][EXE/PSS][EXK/PSS] [EXN/PSS]
32	14354-12261		NUT,CAP	ﾅｯﾄ	1	[EXC/PSS][EXE/PSS][EXK/PSS] [EXN/PSS]
33	14354-12251		PACKING	ﾊﾟｯｷﾝｸﾞ	2	[EXC/PSS][EXE/PSS][EXK/PSS] [EXN/PSS]
34	B-23641-02218		NUT	ﾅｯﾄ	1	[EXC/PSS][EXE/PSS][EXK/PSS] [EXN/PSS]
35	B-94101-20512		WASHER	ﾜｯｼｬ	1	[EXC/PSS][EXE/PSS][EXK/PSS] [EXN/PSS]
36	B-23641-04303		COVER,DUST	ｶﾊﾞｰ	1	[EXC/PSS][EXE/PSS][EXK/PSS] [EXN/PSS]
37	NO PART NO.	#	PLATE,NAME	ﾌﾟﾚｰﾄ	1	[EXC/PSS][EXE/PSS][EXK/PSS] [EXN/PSS]
38	NO PART NO.	#	SCREW,DRIVE	ｽｸﾘｭ	2	[EXC/PSS][EXE/PSS][EXK/PSS] [EXN/PSS]
39	01184-12030		BOLT	ﾎﾞﾙﾄ	4	[EXC/PSS][EXE/PSS][EXK/PSS] [EXN/PSS]
40	239A4-22001		ARM,PITMAN	ｱｰﾑ	1	[EXC/PSS][EXE/PSS][EXK/PSS] [EXN/PSS]
41	04913-11200		BAND	ﾊﾞﾝﾄﾞ	1	[EXC/PSS][EXE/PSS][EXK/PSS] [EXN/PSS]
42	25597-62211		NIPPLE	ﾆｯﾌﾟﾙ	1	[EXC/PSS][EXE/PSS][EXK/PSS] [EXN/PSS]

FIG.60 ORBITROL [EXC][EXE][EXK][EXN][OBT][EXB/OBT]

(F6014130) オービットロール

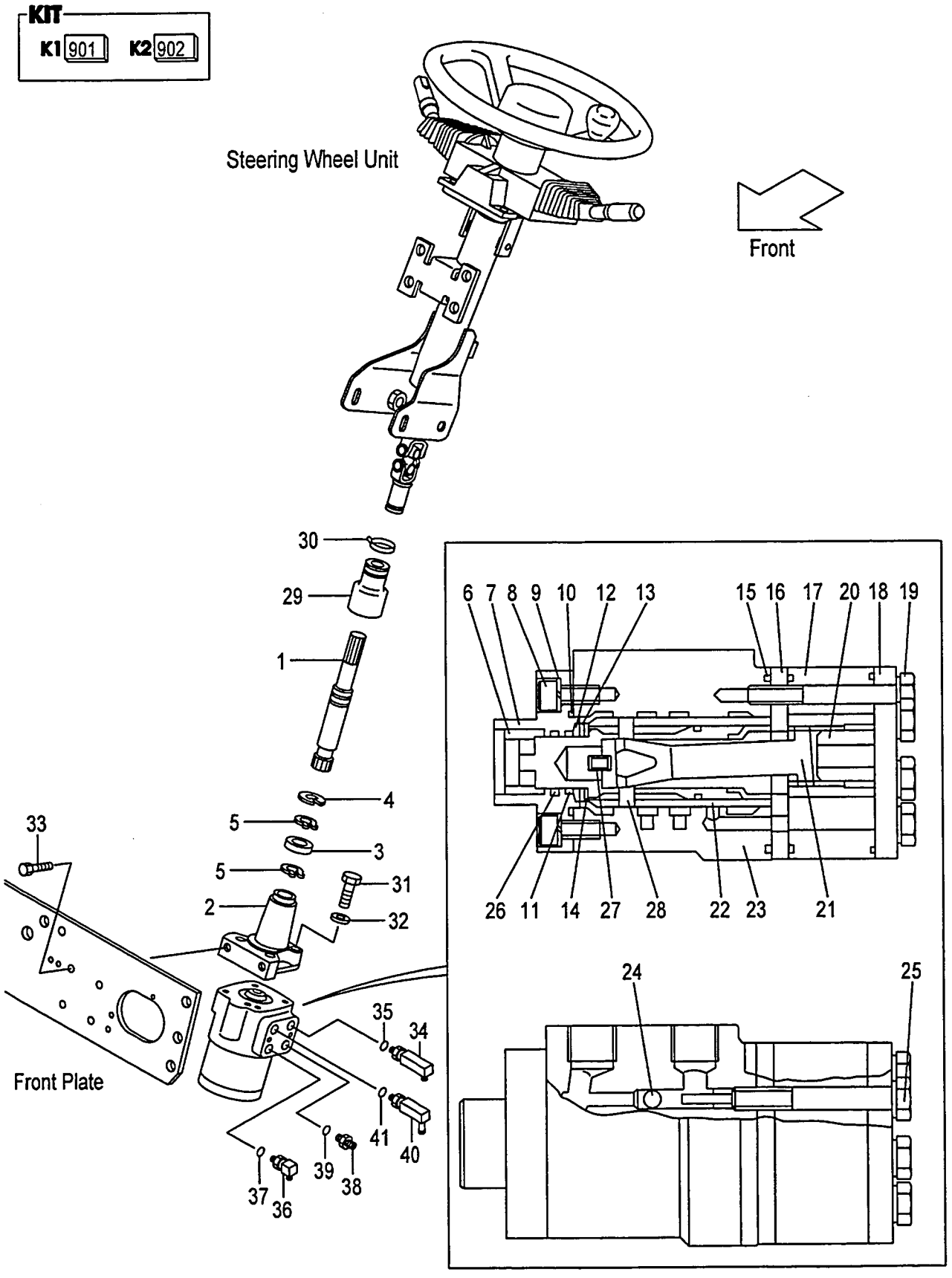

A:FD10C12 FD10T12 FD15C12 FD15T12 FD18C12 FD18T12

Item No	Part No.	Mark	Description		Req'd	Remarks : Serial No.
1	539A2-42001		SHAFT,HANDLE	ｼｬﾌﾄ	1	[EXC][EXE][EXK][EXN][OBT] [EXB/OBT]
2	539A2-42011		FLANGE	ﾌﾗﾝｼﾞ	1	[EXC][EXE][EXK][EXN][OBT] [EXB/OBT]
3	03010-06904		BEARING	ﾍﾞｱﾘﾝｸﾞ	1	[EXC][EXE][EXK][EXN][OBT] [EXB/OBT]
4	02110-00037		RING,SNAP	ｽﾅｯﾌﾟﾘﾝｸﾞ	1	[EXC][EXE][EXK][EXN][OBT] [EXB/OBT]
5	02100-00020		RING,SNAP	ｽﾅｯﾌﾟﾘﾝｸﾞ	2	[EXC][EXE][EXK][EXN][OBT] [EXB/OBT]
A1	HC32G4-10101		UNIT-ASSY,ORBITROL	ｵｰﾋﾞｯﾄﾛｰﾙﾕﾆｯﾄｱｯｾﾝ	1	[EXC][EXE][EXK][EXN][OBT] [EXB/OBT] INC.6-28
901	HC516G2-42411	K1	KIT,SEAL	ｼｰﾙｷｯﾄ	1	[EXC][EXE][EXK][EXN][OBT] [EXB/OBT] INC.10,11,15,26
902	HC26094-17021	K2	KIT,BRG,NEEDLE	ﾆｰﾄﾞﾙﾍﾞｱﾘﾝｸﾞｷｯﾄ	1	[EXC][EXE][EXK][EXN][OBT] [EXB/OBT] INC.12-14
6	NO PART NO.	#	BUSHING	ﾌﾞｯｼﾝｸﾞ	1	[EXC][EXE][EXK][EXN][OBT] [EXB/OBT]
7	NO PART NO.	#	CAP,FRONT	ｷｬｯﾌﾟ	1	[EXC][EXE][EXK][EXN][OBT] [EXB/OBT]
8	NO PART NO.	#	BOLT	ﾎﾞﾙﾄ	4	[EXC][EXE][EXK][EXN][OBT] [EXB/OBT]
9	NO PART NO.	#	WASHER	ﾜｯｼｬ	4	[EXC][EXE][EXK][EXN][OBT] [EXB/OBT]
10	NO PART NO.	#*	O-RING	Oﾘﾝｸﾞ	1	[EXC][EXE][EXK][EXN][OBT] [EXB/OBT]
11	NO PART NO.	#*	SEAL,OIL	ｼｰﾙ	1	[EXC][EXE][EXK][EXN][OBT] [EXB/OBT]
12	NO PART NO.	#*	RACE,BRG	ﾚｰｽ	1	[EXC][EXE][EXK][EXN][OBT] [EXB/OBT]
13	NO PART NO.	#*	BEARING	ﾍﾞｱﾘﾝｸﾞ	1	[EXC][EXE][EXK][EXN][OBT] [EXB/OBT]
14	NO PART NO.	#*	RACE,BRG	ﾚｰｽ	1	[EXC][EXE][EXK][EXN][OBT] [EXB/OBT]
15	NO PART NO.	#*	O-RING	Oﾘﾝｸﾞ	1	[EXC][EXE][EXK][EXN][OBT] [EXB/OBT]
16	NO PART NO.	#	SPACER	ｽﾍﾟｰｻ	1	[EXC][EXE][EXK][EXN][OBT] [EXB/OBT]
17	NO PART NO.	#	GEROTOR	ｼﾞﾛｰﾀ	1	[EXC][EXE][EXK][EXN][OBT] [EXB/OBT]
18	NO PART NO.	#	CAP,END	ｷｬｯﾌﾟ	1	[EXC][EXE][EXK][EXN][OBT] [EXB/OBT]
19	NO PART NO.	#	BOLT	ﾎﾞﾙﾄ	6	[EXC][EXE][EXK][EXN][OBT] [EXB/OBT]
20	NO PART NO.	#	SPACER	ｽﾍﾟｰｻ	1	[EXC][EXE][EXK][EXN][OBT] [EXB/OBT]
21	NO PART NO.	#	SHAFT,DRIVE	ｼｬﾌﾄ	1	[EXC][EXE][EXK][EXN][OBT] [EXB/OBT]
22	NO PART NO.	#	SLEEVE	ｽﾘｰﾌﾞ	1	[EXC][EXE][EXK][EXN][OBT] [EXB/OBT]

FIG.60 ORBITROL [EXC][EXE][EXK][EXN][OBT][EXB/OBT]

(F6014130) オービットロール

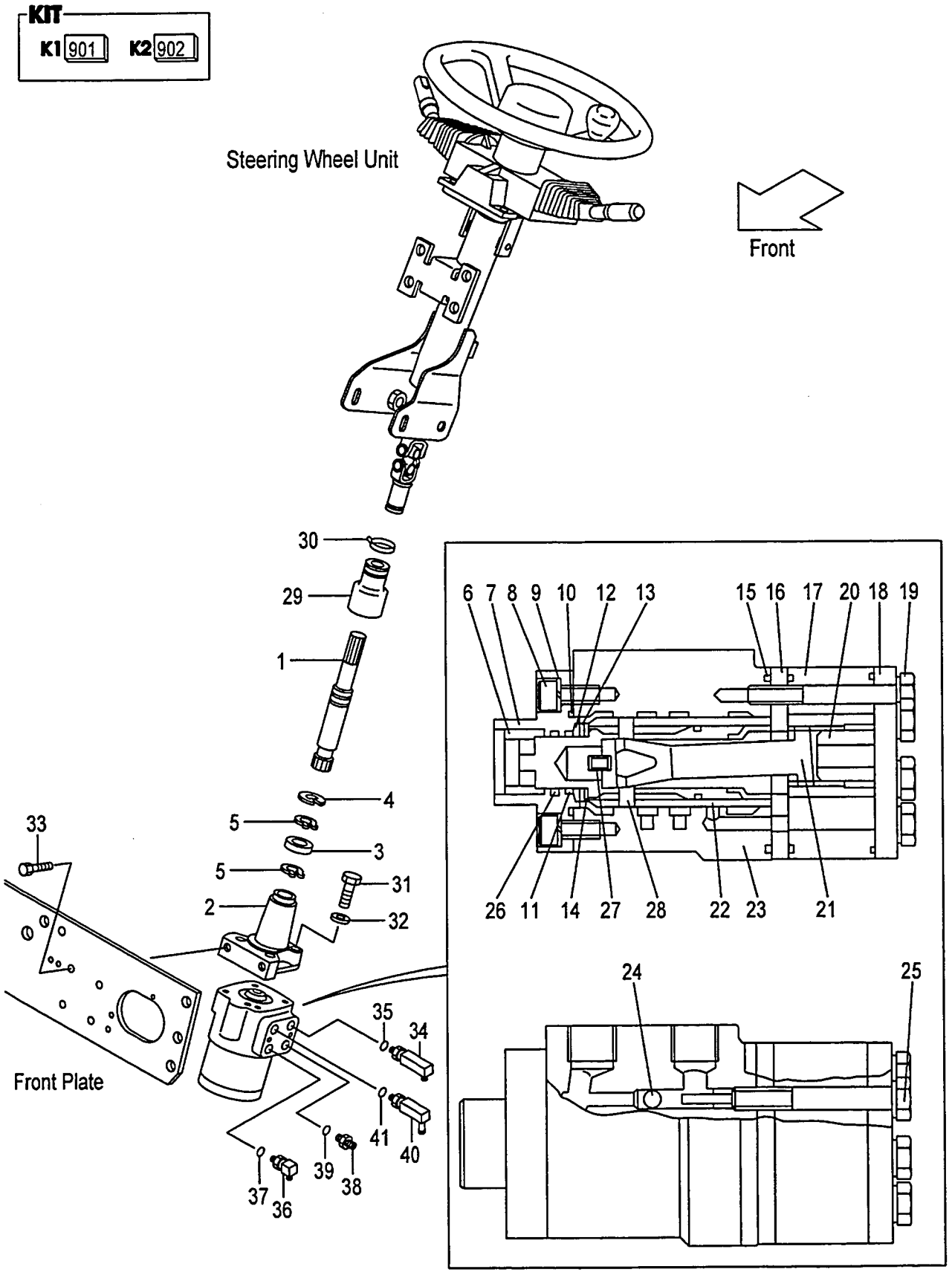

A:FD10C12 FD10T12 FD15C12 FD15T12 FD18C12 FD18T12

Item No	Part No.	Mark	Description		Req'd	Remarks : Serial No.
23	NO PART NO.	#	HOUSING	ﾊｳｼﾞﾝｸﾞ	1	[EXC][EXE][EXK][EXN][OBT] [EXB/OBT]
24	NO PART NO.	#	BALL,STEEL	ﾎﾞｰﾙ	1	[EXC][EXE][EXK][EXN][OBT] [EXB/OBT]
25	NO PART NO.	#	BOLT	ﾎﾞﾙﾄ	1	[EXC][EXE][EXK][EXN][OBT] [EXB/OBT]
26	NO PART NO.	#*	O-RING	Oﾘﾝｸﾞ	1	[EXC][EXE][EXK][EXN][OBT] [EXB/OBT]
27	NO PART NO.	#	SPRING	ｽﾌﾟﾘﾝｸﾞ	1	[EXC][EXE][EXK][EXN][OBT] [EXB/OBT]
28	NO PART NO.	#	PIN	ﾋﾟﾝ	1	[EXC][EXE][EXK][EXN][OBT] [EXB/OBT]
29	239A4-12211		BOOT,GEAR-BOX	ﾌﾞｰﾂ	1	[EXC][EXE][EXK][EXN][OBT] [EXB/OBT]
30	04913-11200		BAND	ﾊﾞﾝﾄﾞ	1	[EXC][EXE][EXK][EXN][OBT] [EXB/OBT]
31	80110-00628		BOLT	ﾎﾞﾙﾄ	4	[EXC][EXE][EXK][EXN][OBT] [EXB/OBT]
32	80430-00006		WASHER	ﾜｯｼｬ	4	[EXC][EXE][EXK][EXN][OBT] [EXB/OBT]
33	216G4-12251		BOLT	ﾎﾞﾙﾄ	2	[EXC][EXE][EXK][EXN][OBT] [EXB/OBT]
A2	23457-60301		ELBOW-ASSY	ｴﾙﾎﾞｱｯｾﾝ	1	[EXC][EXE][EXK][EXN][OBT] [EXB/OBT] INC.34,35
34	NO PART NO.	#	ELBOW	ｴﾙﾎﾞ	1	[EXC][EXE][EXK][EXN][OBT] [EXB/OBT]
35	89140-00006		O-RING	Oﾘﾝｸﾞ	1	[EXC][EXE][EXK][EXN][OBT] [EXB/OBT]
A3	23457-60311		ELBOW-ASSY	ｴﾙﾎﾞｱｯｾﾝ	1	[EXC][EXE][EXK][EXN][OBT] [EXB/OBT] INC.36,37
36	NO PART NO.	#	ELBOW	ｴﾙﾎﾞ	1	[EXC][EXE][EXK][EXN][OBT] [EXB/OBT]
37	89140-00006		O-RING	Oﾘﾝｸﾞ	1	[EXC][EXE][EXK][EXN][OBT] [EXB/OBT]
A4	22197-60231		NIPPLE-ASSY	ﾆｯﾌﾟﾙｱｯｾﾝ	1	[EXC][EXE][EXK][EXN][OBT] [EXB/OBT] INC.38,39
38	NO PART NO.	#	NIPPLE	ﾆｯﾌﾟﾙ	1	[EXC][EXE][EXK][EXN][OBT] [EXB/OBT]
39	89140-00006		O-RING	Oﾘﾝｸﾞ	1	[EXC][EXE][EXK][EXN][OBT] [EXB/OBT]
A5	516G2-40451		ELBOW-ASSY	ｴﾙﾎﾞｱｯｾﾝ	1	[EXC][EXE][EXK][EXN][OBT] [EXB/OBT] INC.40,41
40	NO PART NO.	#	ELBOW	ｴﾙﾎﾞ	1	[EXC][EXE][EXK][EXN][OBT] [EXB/OBT]
41	89140-00006		O-RING	Oﾘﾝｸﾞ	1	[EXC][EXE][EXK][EXN][OBT] [EXB/OBT]

FIG.61 DRAG LINK
(F6014210) ﾄﾞﾗｯｸﾞﾘﾝｸ

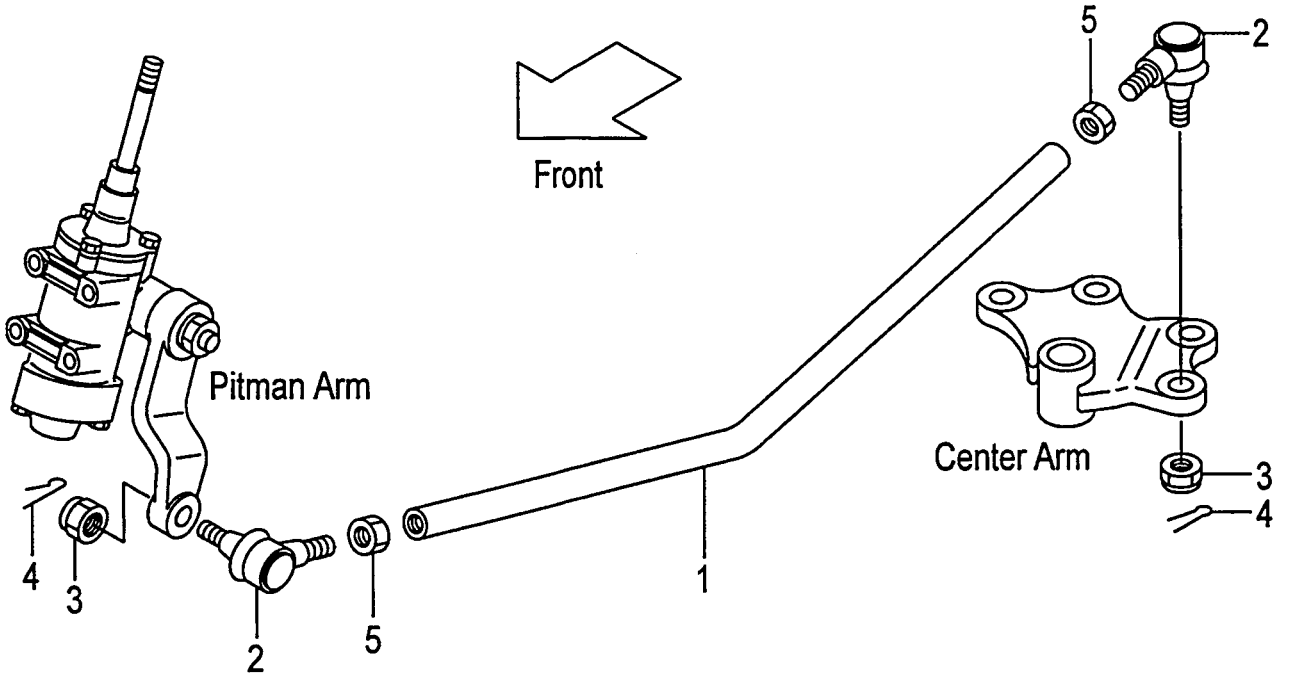

A:FD10C12 FD10T12 FD15C12 FD15T12 FD18C12 FD18T12

Item No	Part No.	Mark	Description		Req'd	Remarks : Serial No.
1	218G4-22001		LINK,DRAG	ﾘﾝｸ	1	(WITHOUT EXC,EXE,EXK,EXN, OBT,EXB/OBT)
-	218G4-22001		LINK,DRAG	ﾘﾝｸ	1	[EXC/PSS][EXE/PSS][EXK/PSS] [EXN/PSS]
A1	24234-30551		END-ASSY,ROD,RH	ｴﾝﾄﾞｱｯｾﾝ	2	(WITHOUT EXC,EXE,EXK,EXN, OBT,EXB/OBT) INC.2-4
-	24234-30551		END-ASSY,ROD,RH	ｴﾝﾄﾞｱｯｾﾝ	2	[EXC/PSS][EXE/PSS][EXK/PSS] [EXN/PSS] INC.2-4
2	NO PART NO.	#	END,ROD,RH	ｴﾝﾄﾞ	2	(WITHOUT EXC,EXE,EXK,EXN, OBT,EXB/OBT)
-	NO PART NO.	#	END,ROD,RH	ｴﾝﾄﾞ	2	[EXC/PSS][EXE/PSS][EXK/PSS] [EXN/PSS]
3	01412-10016		NUT	ﾅｯﾄ	2	(WITHOUT EXC,EXE,EXK,EXN, OBT,EXB/OBT)
-	01412-10016		NUT	ﾅｯﾄ	2	[EXC/PSS][EXE/PSS][EXK/PSS] [EXN/PSS]
4	02200-32032		PIN,COTTER	ﾋﾟﾝ	2	(WITHOUT EXC,EXE,EXK,EXN, OBT,EXB/OBT)
-	02200-32032		PIN,COTTER	ﾋﾟﾝ	2	[EXC/PSS][EXE/PSS][EXK/PSS] [EXN/PSS]
5	01402-00022		NUT	ﾅｯﾄ	2	(WITHOUT EXC,EXE,EXK,EXN, OBT,EXB/OBT)
-	01402-00022		NUT	ﾅｯﾄ	2	[EXC/PSS][EXE/PSS][EXK/PSS] [EXN/PSS]

FIG.62 STEERING AXLE

(F6014310) ステアリング アクスル

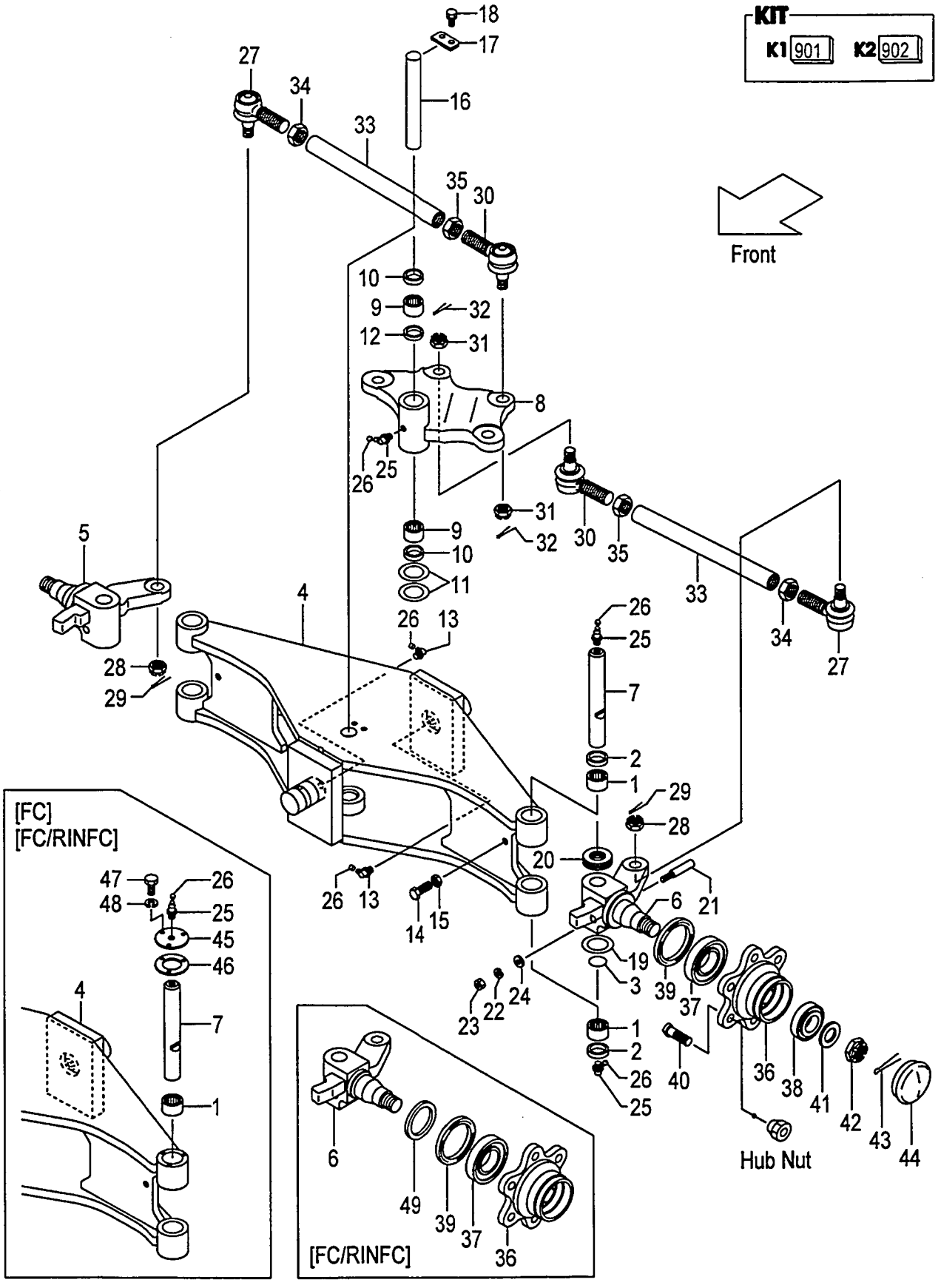

A:FD10C12 FD10T12 FD15C12 FD15T12 FD18C12 FD18T12

Item No	Part No.	Mark	Description		Req'd	Remarks : Serial No.
A1	216G4-30201		AXLE-ASSY,STEERING	ｽﾃｱﾘﾝｸﾞｱｸｽﾙｱｯｾﾝ	1	INC.1-44
-	516G3-70011		AXLE-ASSY,STEERING	ｽﾃｱﾘﾝｸﾞｱｸｽﾙｱｯｾﾝ	1	[FC] INC.1-48
-	516G3-70021		AXLE-ASSY,STEERING	ｽﾃｱﾘﾝｸﾞｱｸｽﾙｱｯｾﾝ	1	[FC/RINFC] INC.1-49
901	24234-39803	K1	KIT,REPAIR	ﾘﾍﾟｱｷｯﾄ	1	INC.1-3,20-24, 25(2PCS)26(2PCS)
902	24234-39813	K2	KIT,REPAIR	ﾘﾍﾟｱｷｯﾄ	1	INC.9-13,17,25(1PC)26(1PC)
1	22574-32062	*	BEARING	ﾍﾞｱﾘﾝｸﾞ	4	
2	24234-32231	*	SEAL,OIL	ｼｰﾙ	4	
-	24234-32231	*	SEAL,OIL	ｼｰﾙ	2	[FC][FC/RINFC]
3	24234-32241	*	O-RING	Oﾘﾝｸﾞ	2	
4	277H4-30211		AXLE,STEERING	ｱｸｽﾙ	1	
-	577H3-70101		AXLE,STEERING	ｱｸｽﾙ	1	[FC][FC/RINFC]
5	277H4-30301		KNUCKLE,RH	ﾅｯｸﾙ	1	
-	577H3-72001		KNUCKLE,RH	ﾅｯｸﾙ	1	[FC/RINFC]
6	277H4-30401		KNUCKLE,LH	ﾅｯｸﾙ	1	
-	577H3-72021		KNUCKLE,LH	ﾅｯｸﾙ	1	[FC/RINFC]
7	24234-32182		KINGPIN	ｷﾝｸﾞﾋﾟﾝ	2	
-	57023-72011		KINGPIN	ｷﾝｸﾞﾋﾟﾝ	2	[FC][FC/RINFC]
8	271A4-30311		ARM,CENTER	ｱｰﾑ	1	
9	22574-32062	*	BEARING	ﾍﾞｱﾘﾝｸﾞ	2	
10	24234-32231	*	SEAL,OIL	ｼｰﾙ	2	
11	20114-30091	*	SHIM,T-0.2	ｼﾑ	2	
12	24234-32123	*	SPACER	ｽﾍﾟｰｻ	1	
13	04901-00191	*	FITTING	ﾌｨｯﾃｨﾝｸﾞ	2	
14	01120-10030		BOLT	ﾎﾞﾙﾄ	2	
15	01402-00010		NUT	ﾅｯﾄ	2	
16	24234-32131		PIN,CENTER-ARM	ﾋﾟﾝ	1	
17	20224-30061	*	PLATE,SET	ﾌﾟﾚｰﾄ	1	
18	01183-08016		BOLT	ﾎﾞﾙﾄ	2	
19	20114-30091		SHIM,T-0.2	ｼﾑ	6	
20	22194-32222	*	BEARING	ﾍﾞｱﾘﾝｸﾞ	2	
21	20114-30081	*	PIN,LOCK	ﾋﾟﾝ	2	
22	02010-00008	*	WASHER	ﾜｯｼｬ	2	
23	01400-00008	*	NUT	ﾅｯﾄ	2	
24	02000-00008	*	WASHER	ﾜｯｼｬ	2	
25	04901-00160	*	FITTING	ﾌｨｯﾃｨﾝｸﾞ	5	
26	22199-12401	*	CAP,NIPPLE	ｷｬｯﾌﾟ	7	
A2	24234-30551		END-ASSY,ROD,RH	ｴﾝﾄﾞｱｯｾﾝ	2	INC.27-29
27	NO PART NO.	#	END,ROD,RH	ｴﾝﾄﾞ	2	
28	01412-10016		NUT,CASTLE	ﾅｯﾄ	2	
29	02200-32032		PIN,COTTER	ﾋﾟﾝ	2	
A3	24234-30561		END-ASSY,ROD,LH	ｴﾝﾄﾞｱｯｾﾝ	2	INC.30-32
30	NO PART NO.	#	END,ROD,LH	ｴﾝﾄﾞ	2	
31	01412-10016		NUT,CASTLE	ﾅｯﾄ	2	
32	02200-32032		PIN,COTTER	ﾋﾟﾝ	2	
33	24234-32271		ROD,TIE	ﾛｯﾄﾞ	2	
34	24234-32411		NUT,RH	ﾅｯﾄ	2	
35	24234-32421		NUT,LH	ﾅｯﾄ	2	
36	24234-32221		HUB	ﾊﾌﾞ	2	
37	12003-43021		BEARING	ﾍﾞｱﾘﾝｸﾞ	2	

FIG.62 STEERING AXLE

(F6014310) ステアリング アクスル

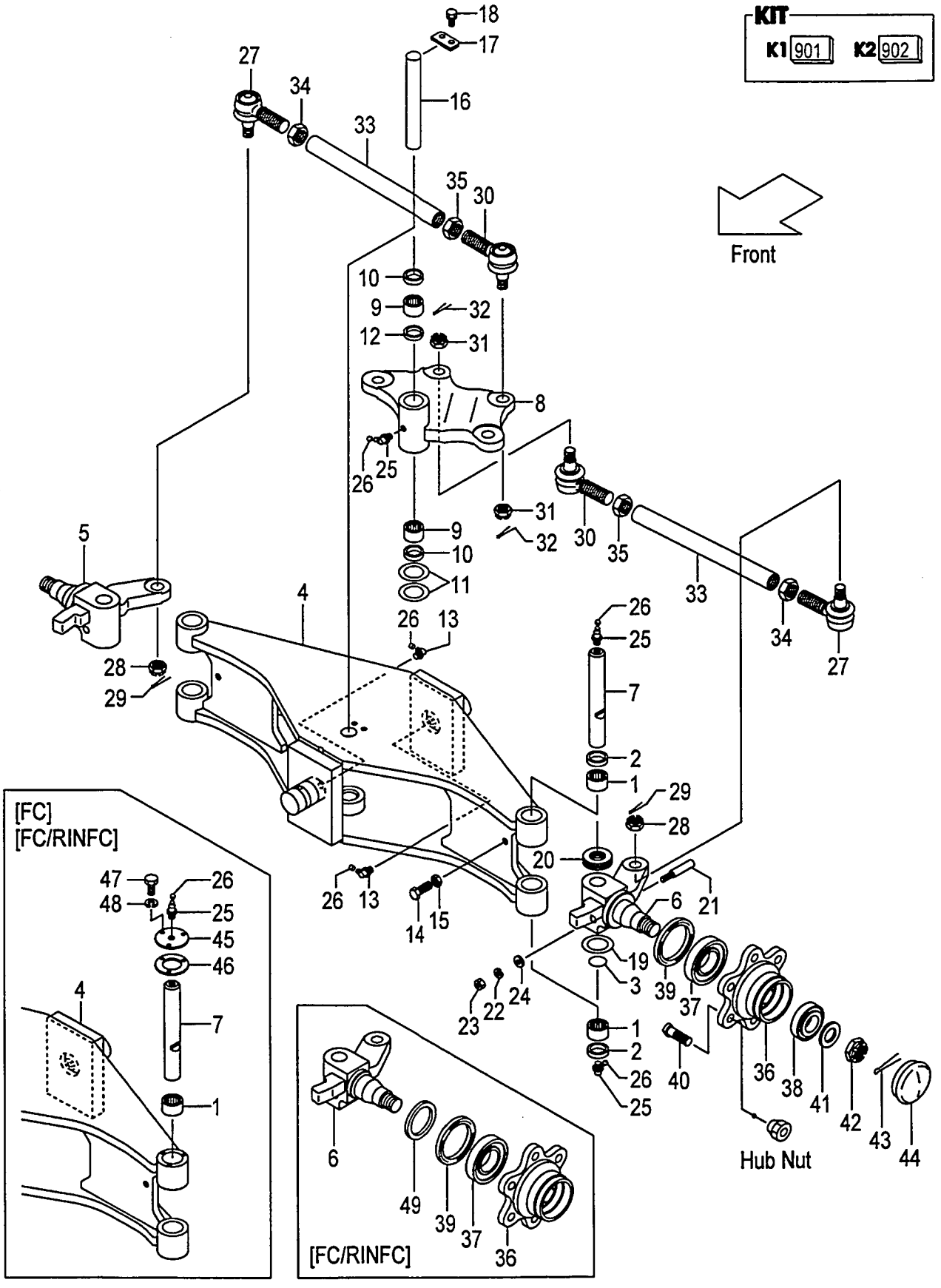

A:FD10C12 FD10T12 FD15C12 FD15T12 FD18C12 FD18T12

Item No	Part No.	Mark	Description		Req'd	Remarks : Serial No.
38	03071-30206		BEARING	ﾍﾞｱﾘﾝｸﾞ	2	
39	22574-32102		SEAL,OIL	ｼｰﾙ	2	
40	23654-32041		BOLT,HUB	ﾎﾞﾙﾄ	12	
41	02000-00024		WASHER	ﾜｯｼｬ	2	
42	01412-00024		NUT,CASTLE	ﾅｯﾄ	2	
43	02200-05045		PIN,COTTER	ﾋﾟﾝ	2	
44	22194-32361		CAP	ｷｬｯﾌﾟ	2	
45	57393-72251		PLATE,CAP	ﾌﾟﾚｰﾄ	2	[FC][FC/RINFC]
46	57393-72262		PACKING	ﾊﾟｯｷﾝｸﾞ	2	[FC][FC/RINFC]
47	01141-04012		BOLT	ﾎﾞﾙﾄ	6	[FC][FC/RINFC]
48	02010-10004		WASHER	ﾜｯｼｬ	6	[FC][FC/RINFC]
49	57393-72041		SEAT,OIL-SEAL	ｼｰﾄ	2	[FC/RINFC]

FIG.63 STEERING AXLE [EXC][EXE][EXK][EXN][OBT][EXB/OBT]

(F6014320) ステアリングアクスル

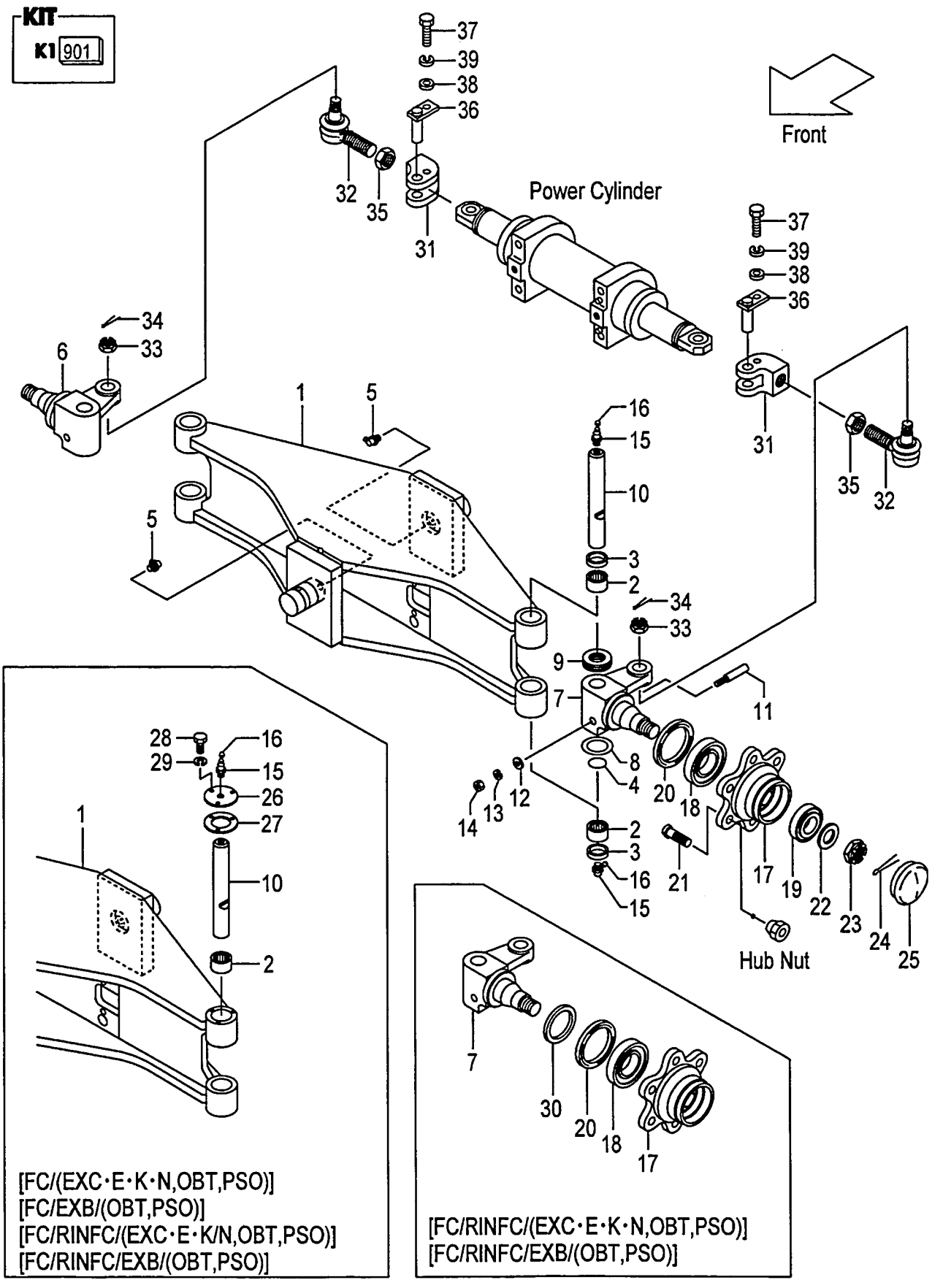

A:FD10C12 FD10T12 FD15C12 FD15T12 FD18C12 FD18T12

Item No	Part No.	Mark	Description		Req'd	Remarks : Serial No.
A1	510F2-40101		AXLE-ASSY,STEERING	ｽﾃｱﾘﾝｸﾞｱｸｽﾙｱｯｾﾝ	1	[EXC][EXE][EXK][EXN][OBT] [EXB/OBT] INC.1-25
-	510F2-43001		AXLE-ASSY,STEERING	ｽﾃｱﾘﾝｸﾞｱｸｽﾙｱｯｾﾝ	1	[FC/EXC&E&K&N][FC/OBT] [FC/EXB/OBT] INC.1-29
-	510F2-44001		AXLE-ASSY,STEERING	ｽﾃｱﾘﾝｸﾞｱｸｽﾙｱｯｾﾝ	1	[FC/RINFC/EXC&E&K&N] [FC/RINFC/OBT] INC.1-30
-	510F2-44001		AXLE-ASSY,STEERING	ｽﾃｱﾘﾝｸﾞｱｸｽﾙｱｯｾﾝ	1	[FC/RINFC/EXB/OBT] INC.1-30
901	24234-39803	K1	KIT,REPAIR	ﾘﾍﾟｱｷｯﾄ	1	[EXC][EXE][EXK][EXN][OBT] [EXB/OBT] INC.2-4,9,11-16
1	510F2-40211		AXLE,STEERING	ｱｸｽﾙ	1	[EXC][EXE][EXK][EXN][OBT] [EXB/OBT]
-	510F2-43021		AXLE,STEERING	ｱｸｽﾙ	1	[FC/EXC&E&K&N][FC/OBT] [FC/EXB/OBT]
-	510F2-43021		AXLE,STEERING	ｱｸｽﾙ	1	[FC/RINFC/EXC&E&K&N] [FC/RINFC/OBT]
-	510F2-43021		AXLE,STEERING	ｱｸｽﾙ	1	[FC/RINFC/EXB/OBT]
2	22574-32062	*	BEARING	ﾍﾞｱﾘﾝｸﾞ	4	[EXC][EXE][EXK][EXN][OBT] [EXB/OBT]
3	24234-32231	*	SEAL,OIL	ｼｰﾙ	4	[EXC][EXE][EXK][EXN][OBT] [EXB/OBT]
-	24234-32231	*	SEAL,OIL	ｼｰﾙ	2	[FC/EXC&E&K&N][FC/OBT] [FC/EXB/OBT]
-	24234-32231	*	SEAL,OIL	ｼｰﾙ	2	[FC/RINFC/EXC&E&K&N] [FC/RINFC/OBT]
-	24234-32231	*	SEAL,OIL	ｼｰﾙ	2	[FC/RINFC/EXB/OBT]
4	24234-32241	*	O-RING	Oﾘﾝｸﾞ	2	[EXC][EXE][EXK][EXN][OBT] [EXB/OBT]
5	04901-00191		FITTING	ﾌｨｯﾃｨﾝｸﾞ	2	[EXC][EXE][EXK][EXN][OBT] [EXB/OBT]
6	510F2-40301		KNUCKLE,RH	ﾅｯｸﾙ	1	[EXC][EXE][EXK][EXN][OBT] [EXB/OBT]
-	510F2-43041		KNUCKLE,RH	ﾅｯｸﾙ	1	[FC/RINFC/EXC&E&K&N] [FC/RINFC/OBT]
-	510F2-43041		KNUCKLE,RH	ﾅｯｸﾙ	1	[FC/RINFC/EXB/OBT]
7	510F2-40311		KNUCKLE,LH	ﾅｯｸﾙ	1	[EXC][EXE][EXK][EXN][OBT] [EXB/OBT]
-	510F2-43051		KNUCKLE,LH	ﾅｯｸﾙ	1	[FC/RINFC/EXC&E&K&N] [FC/RINFC/OBT]
-	510F2-43051		KNUCKLE,LH	ﾅｯｸﾙ	1	[FC/RINFC/EXB/OBT]
8	20114-30091		SHIM,T-0.2	ｼﾑ	6	[EXC][EXE][EXK][EXN][OBT] [EXB/OBT]
9	22194-32222	*	BEARING	ﾍﾞｱﾘﾝｸﾞ	2	[EXC][EXE][EXK][EXN][OBT] [EXB/OBT]
10	24234-32182		KINGPIN	ｷﾝｸﾞﾋﾟﾝ	2	[EXC][EXE][EXK][EXN][OBT] [EXB/OBT]
-	57023-72011		KINGPIN	ｷﾝｸﾞﾋﾟﾝ	2	[FC/EXC&E&K&N][FC/OBT] [FC/EXB/OBT]
-	57023-72011		KINGPIN	ｷﾝｸﾞﾋﾟﾝ	2	[FC/RINFC/EXC&E&K&N] [FC/RINFC/OBT]
-	57023-72011		KINGPIN	ｷﾝｸﾞﾋﾟﾝ	2	[FC/RINFC/EXB/OBT]

FIG.63 STEERING AXLE [EXC][EXE][EXK][EXN][OBT][EXB/OBT]

(F6014320) ステアリングアクスル

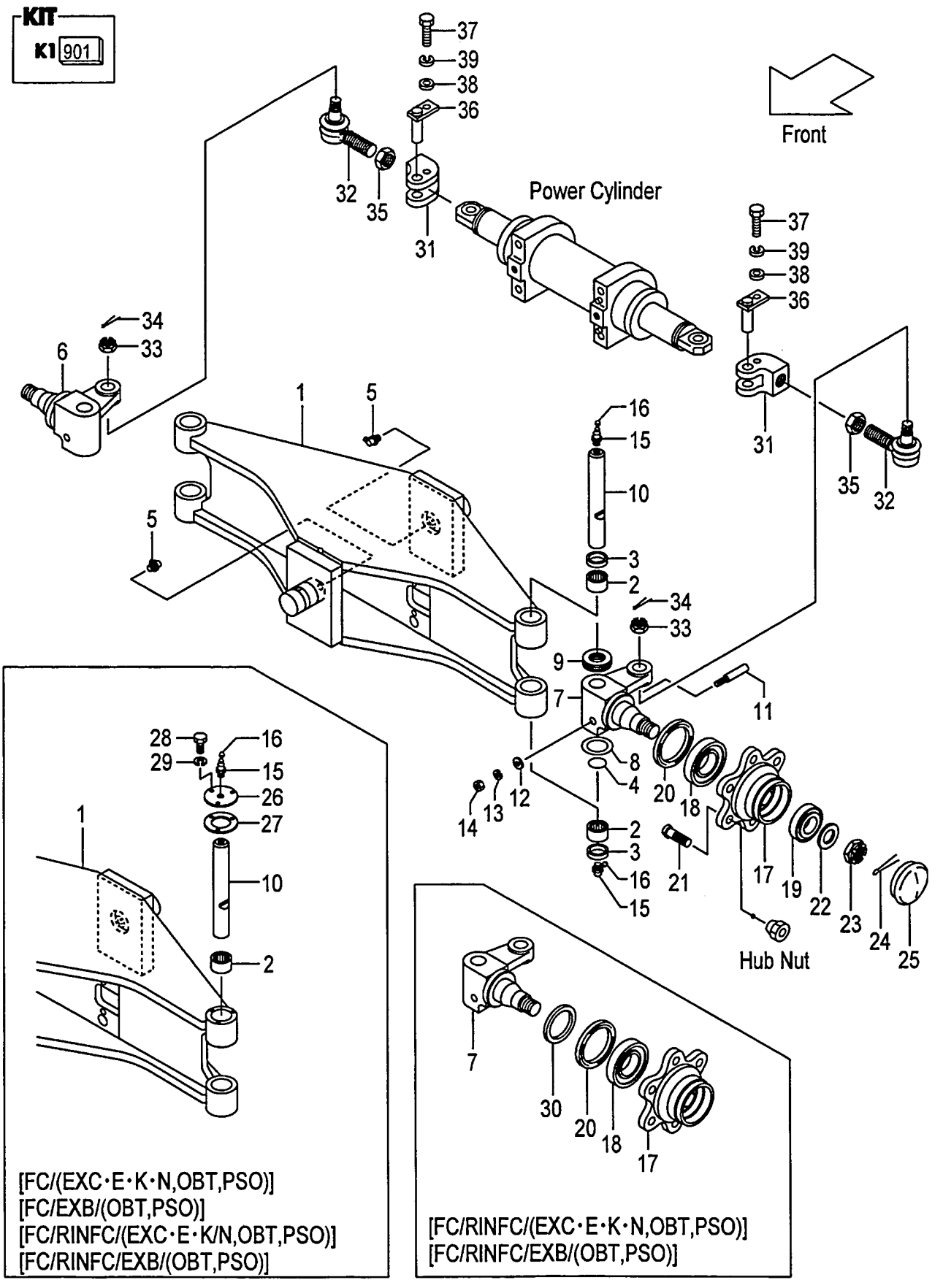

A:FD10C12 FD10T12 FD15C12 FD15T12 FD18C12 FD18T12

Item No	Part No.	Mark	Description		Req'd	Remarks : Serial No.
11	20114-30081	*	PIN,LOCK	ﾋﾟﾝ	2	[EXC][EXE][EXK][EXN][OBT] [EXB/OBT]
12	02000-00008	*	WASHER	ﾜｯｼｬ	2	[EXC][EXE][EXK][EXN][OBT] [EXB/OBT]
13	02010-00008	*	WASHER	ﾜｯｼｬ	2	[EXC][EXE][EXK][EXN][OBT] [EXB/OBT]
14	01400-00008	*	NUT	ﾅｯﾄ	2	[EXC][EXE][EXK][EXN][OBT] [EXB/OBT]
15	04901-00160	*	FITTING	ﾌｨｯﾃｨﾝｸﾞ	4	[EXC][EXE][EXK][EXN][OBT] [EXB/OBT]
16	22199-12401	*	CAP,NIPPLE	ｷｬｯﾌﾟ	4	[EXC][EXE][EXK][EXN][OBT] [EXB/OBT]
17	24234-32221		HUB	ﾊﾌﾞ	2	[EXC][EXE][EXK][EXN][OBT] [EXB/OBT]
18	12003-43021		BEARING	ﾍﾞｱﾘﾝｸﾞ	2	[EXC][EXE][EXK][EXN][OBT] [EXB/OBT]
19	03071-30206		BEARING	ﾍﾞｱﾘﾝｸﾞ	2	[EXC][EXE][EXK][EXN][OBT] [EXB/OBT]
20	22574-32102		SEAL,OIL	ｼｰﾙ	2	[EXC][EXE][EXK][EXN][OBT] [EXB/OBT]
21	23654-32041		BOLT,HUB	ﾎﾞﾙﾄ	12	[EXC][EXE][EXK][EXN][OBT] [EXB/OBT]
22	02000-00024		WASHER	ﾜｯｼｬ	2	[EXC][EXE][EXK][EXN][OBT] [EXB/OBT]
23	01412-00024		NUT,CASTLE	ﾅｯﾄ	2	[EXC][EXE][EXK][EXN][OBT] [EXB/OBT]
24	02200-05045		PIN,COTTER	ﾋﾟﾝ	2	[EXC][EXE][EXK][EXN][OBT] [EXB/OBT]
25	22194-32361		CAP	ｷｬｯﾌﾟ	2	[EXC][EXE][EXK][EXN][OBT] [EXB/OBT]
26	57393-72251		PLATE,CAP	ﾌﾟﾚｰﾄ	2	[FC/EXC&E&K&N][FC/OBT] [FC/EXB/OBT]
-	57393-72251		PLATE,CAP	ﾌﾟﾚｰﾄ	2	[FC/RINFC/EXC&E&K&N] [FC/RINFC/OBT]
-	57393-72251		PLATE,CAP	ﾌﾟﾚｰﾄ	2	[FC/RINFC/EXB/OBT]
27	57393-72262		PACKING	ﾊﾟｯｷﾝｸﾞ	2	[FC/EXC&E&K&N][FC/OBT] [FC/EXB/OBT]
-	57393-72262		PACKING	ﾊﾟｯｷﾝｸﾞ	2	[FC/RINFC/EXC&E&K&N] [FC/RINFC/OBT]
-	57393-72262		PACKING	ﾊﾟｯｷﾝｸﾞ	2	[FC/RINFC/EXB/OBT]
28	01141-04012		BOLT	ﾎﾞﾙﾄ	6	[FC/EXC&E&K&N][FC/OBT] [FC/EXB/OBT]
-	01141-04012		BOLT	ﾎﾞﾙﾄ	6	[FC/RINFC/EXC&E&K&N] [FC/RINFC/OBT]
-	01141-04012		BOLT	ﾎﾞﾙﾄ	6	[FC/RINFC/EXB/OBT]
29	02010-10004		WASHER	ﾜｯｼｬ	6	[FC/EXC&E&K&N][FC/OBT] [FC/EXB/OBT]
-	02010-10004		WASHER	ﾜｯｼｬ	6	[FC/RINFC/EXC&E&K&N] [FC/RINFC/OBT]
-	02010-10004		WASHER	ﾜｯｼｬ	6	[FC/RINFC/EXB/OBT]

FIG.63 STEERING AXLE [EXC][EXE][EXK][EXN][OBT][EXB/OBT]

(F6014320) ステアリングアクスル

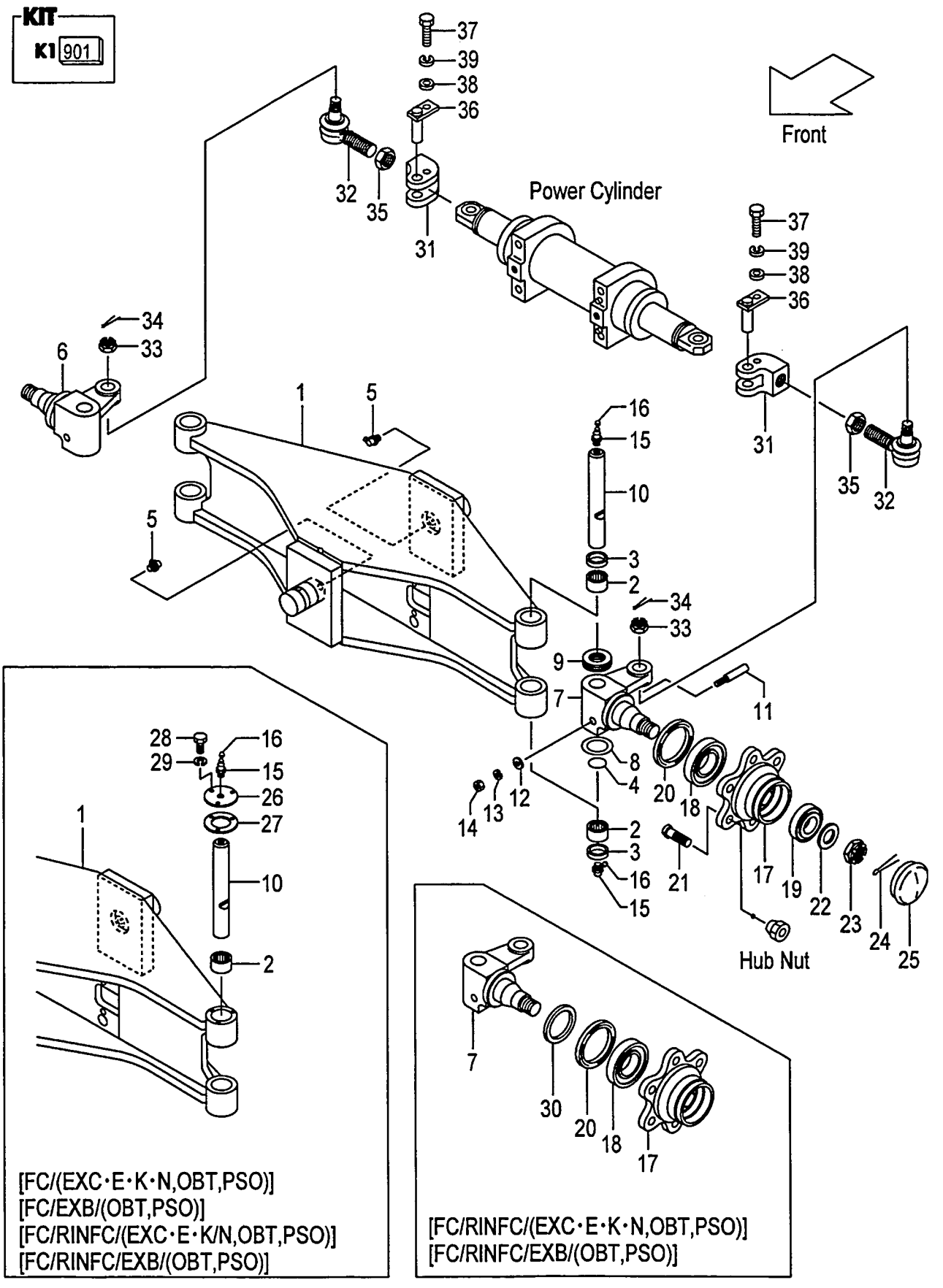

A:FD10C12 FD10T12 FD15C12 FD15T12 FD18C12 FD18T12

Item No	Part No.	Mark	Description		Req'd	Remarks : Serial No.
30	57393-72041		SEAT,OIL-SEAL	ｼｰﾄ	2	[FC/RINFC/EXC&E&K&N] [FC/RINFC/OBT]
-	57393-72041		SEAT,OIL-SEAL	ｼｰﾄ	2	[FC/RINFC/EXB/OBT]
31	510F2-42262		END,ROD	ｴﾝﾄﾞ	2	[EXC][EXE][EXK][EXN][OBT] [EXB/OBT]
A2	24234-30551		END-ASSY,ROD,RH	ｴﾝﾄﾞｱｯｾﾝ	2	[EXC][EXE][EXK][EXN][OBT] [EXB/OBT] INC.32-34
32	NO PART NO.	#	END,ROD,RH	ｴﾝﾄﾞ	2	[EXC][EXE][EXK][EXN][OBT] [EXB/OBT]
33	01412-10016		NUT,CASTLE	ﾅｯﾄ	2	[EXC][EXE][EXK][EXN][OBT] [EXB/OBT]
34	02200-32032		PIN,COTTER	ﾋﾟﾝ	2	[EXC][EXE][EXK][EXN][OBT] [EXB/OBT]
35	24234-32411		NUT,RH	ﾅｯﾄ	2	[EXC][EXE][EXK][EXN][OBT] [EXB/OBT]
36	510F2-42301		PIN	ﾋﾟﾝ	2	[EXC][EXE][EXK][EXN][OBT] [EXB/OBT]
-	510F2-43101		PIN	ﾋﾟﾝ	2	[FC/EXC&E&K&N][FC/OBT] [FC/EXB/OBT]
-	510F2-43101		PIN	ﾋﾟﾝ	2	[FC/RINFC/EXC&E&K&N] [FC/RINFC/OBT]
-	510F2-43101		PIN	ﾋﾟﾝ	2	[FC/RINFC/EXB/OBT]
37	01103-08016		BOLT	ﾎﾞﾙﾄ	2	[EXC][EXE][EXK][EXN][OBT] [EXB/OBT]
38	02000-00008		WASHER	ﾜｯｼｬ	2	[EXC][EXE][EXK][EXN][OBT] [EXB/OBT]
39	02011-00008		WASHER	ﾜｯｼｬ	2	[EXC][EXE][EXK][EXN][OBT] [EXB/OBT]

FIG.64 STEERING AXLE [(EXC,EXE,EXK,EXN)/PSS]

(F6014330) ステアリング アクスル

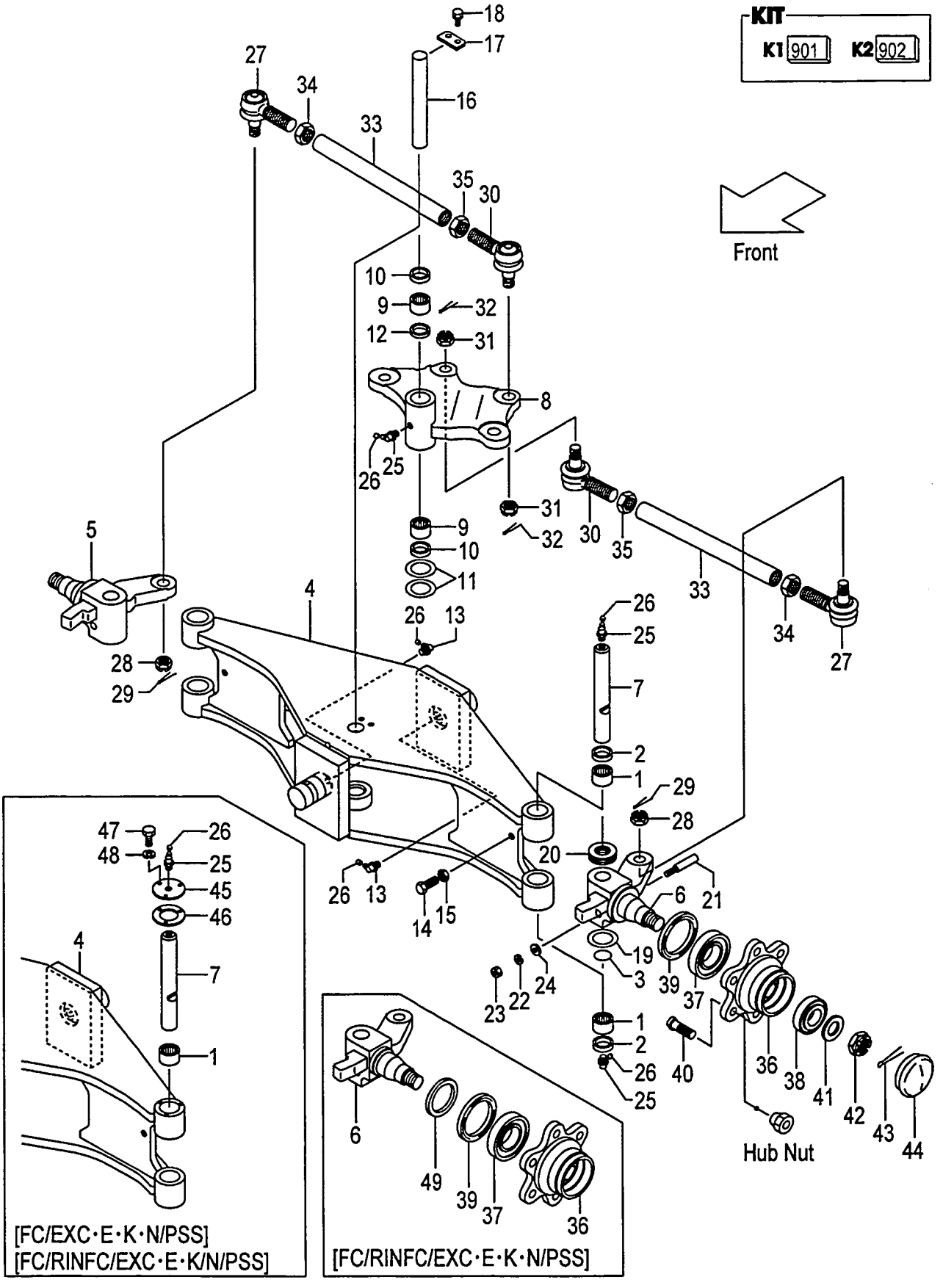

A:FD10C12 FD10T12 FD15C12 FD15T12 FD18C12 FD18T12

Item No	Part No.	Mark	Description		Req'd	Remarks : Serial No.
A1	216G4-30201		AXLE-ASSY,STEERING	ｽﾃｱﾘﾝｸﾞｱｸｽﾙｱｯｾﾝ	1	[EXC/PSS][EXE/PSS][EXK/PSS] [EXN/PSS] INC.1-44
-	516G3-70011		AXLE-ASSY,STEERING	ｽﾃｱﾘﾝｸﾞｱｸｽﾙｱｯｾﾝ	1	[FC/EXC&E&K&N/PSS] INC.1-48
-	516G3-70021		AXLE-ASSY,STEERING	ｽﾃｱﾘﾝｸﾞｱｸｽﾙｱｯｾﾝ	1	[FC/RINFC/EXC&E&K&N/PSS] INC.1-49
901	24234-39803	K1	KIT,REPAIR	ﾘﾍﾟｱｷｯﾄ	1	[EXC&E&K&N/PSSINC.1-3,20-24, 25(2PCS),26(2PCS)
902	24234-39813	K2	KIT,REPAIR	ﾘﾍﾟｱｷｯﾄ	1	[EXC&E&K&N/PSSINC.9-13,17, 25(1PC),26(1PC)
1	22574-32062	*	BEARING	ﾍﾞｱﾘﾝｸﾞ	4	[EXC/PSS][EXE/PSS][EXK/PSS] [EXN/PSS]
2	24234-32231	*	SEAL,OIL	ｼｰﾙ	4	[EXC/PSS][EXE/PSS][EXK/PSS] [EXN/PSS]
-	24234-32231	*	SEAL,OIL	ｼｰﾙ	2	[FC/EXC&E&K&N/PSS] [FC/RINFC/EXC&E&K&N/PSS]
3	24234-32241	*	O-RING	Oﾘﾝｸﾞ	2	[EXC/PSS][EXE/PSS][EXK/PSS] [EXN/PSS]
4	277H4-30211		AXLE,STEERING	ｱｸｽﾙ	1	[EXC/PSS][EXE/PSS][EXK/PSS] [EXN/PSS]
-	577H3-70101		AXLE,STEERING	ｱｸｽﾙ	1	[FC/EXC&E&K&N/PSS] [FC/RINFC/EXC&E&K&N/PSS]
5	277H4-30301		KNUCKLE,RH	ﾅｯｸﾙ	1	[EXC/PSS][EXE/PSS][EXK/PSS] [EXN/PSS]
-	577H3-72001		KNUCKLE,RH	ﾅｯｸﾙ	1	[FC/RINFC/EXC&E&K&N/PSS]
6	277H4-30401		KNUCKLE,LH	ﾅｯｸﾙ	1	[EXC/PSS][EXE/PSS][EXK/PSS] [EXN/PSS]
-	577H3-72021		KNUCKLE,LH	ﾅｯｸﾙ	1	[FC/RINFC/EXC&E&K&N/PSS]
7	24234-32182		KINGPIN	ｷﾝｸﾞﾋﾟﾝ	2	[EXC/PSS][EXE/PSS][EXK/PSS] [EXN/PSS]
-	57023-72011		KINGPIN	ｷﾝｸﾞﾋﾟﾝ	2	[FC/EXC&E&K&N/PSS] [FC/RINFC/EXC&E&K&N/PSS]
8	271A4-30311		ARM,CENTER	ｱｰﾑ	1	[EXC/PSS][EXE/PSS][EXK/PSS] [EXN/PSS]
9	22574-32062	*	BEARING	ﾍﾞｱﾘﾝｸﾞ	2	[EXC/PSS][EXE/PSS][EXK/PSS] [EXN/PSS]
10	24234-32231	*	SEAL,OIL	ｼｰﾙ	2	[EXC/PSS][EXE/PSS][EXK/PSS] [EXN/PSS]
11	20114-30091	*	SHIM,T-0.2	ｼﾑ	2	[EXC/PSS][EXE/PSS][EXK/PSS] [EXN/PSS]
12	24234-32123	*	SPACER	ｽﾍﾟｰｻ	1	[EXC/PSS][EXE/PSS][EXK/PSS] [EXN/PSS]
13	04901-00191	*	FITTING	ﾌｨｯﾃｨﾝｸﾞ	2	[EXC/PSS][EXE/PSS][EXK/PSS] [EXN/PSS]
14	01120-10030		BOLT	ﾎﾞﾙﾄ	2	[EXC/PSS][EXE/PSS][EXK/PSS] [EXN/PSS]
15	01402-00010		NUT	ﾅｯﾄ	2	[EXC/PSS][EXE/PSS][EXK/PSS] [EXN/PSS]
16	24234-32131		PIN,CENTER-ARM	ﾋﾟﾝ	1	[EXC/PSS][EXE/PSS][EXK/PSS] [EXN/PSS]

FIG.64 STEERING AXLE [(EXC,EXE,EXK,EXN)/PSS]

(F6014330) ステアリング アクスル

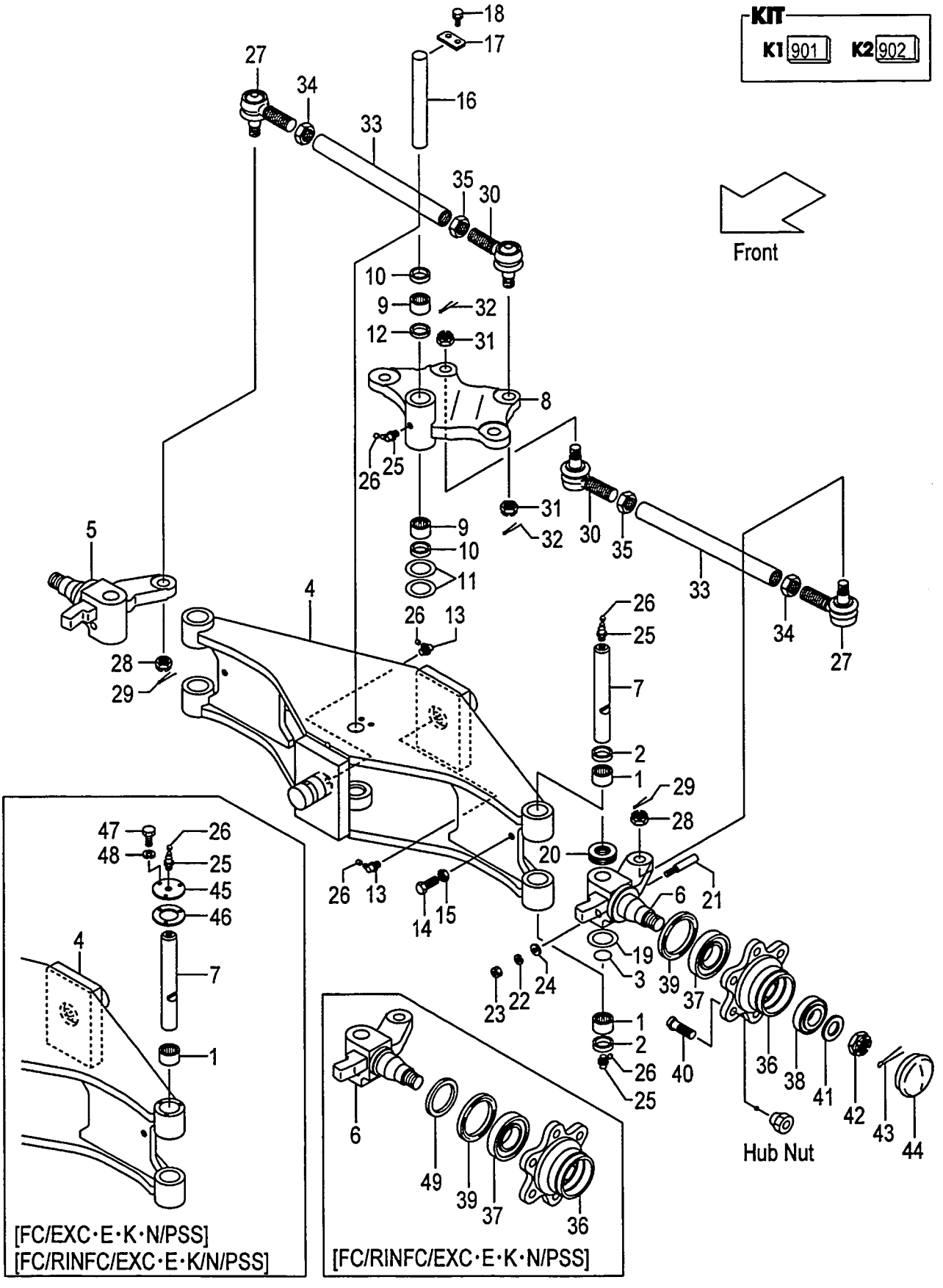

A:FD10C12 FD10T12 FD15C12 FD15T12 FD18C12 FD18T12

Item No	Part No.	Mark	Description		Req'd	Remarks : Serial No.
17	20224-30061	*	PLATE,SET	ﾌﾟﾚｰﾄ	1	[EXC/PSS][EXE/PSS][EXK/PSS] [EXN/PSS]
18	01183-08016		BOLT	ﾎﾞﾙﾄ	2	[EXC/PSS][EXE/PSS][EXK/PSS] [EXN/PSS]
19	20114-30091		SHIM,T-0.2	ｼﾑ	6	[EXC/PSS][EXE/PSS][EXK/PSS] [EXN/PSS]
20	22194-32222	*	BEARING	ﾍﾞｱﾘﾝｸﾞ	2	[EXC/PSS][EXE/PSS][EXK/PSS] [EXN/PSS]
21	20114-30081	*	PIN,LOCK	ﾋﾟﾝ	2	[EXC/PSS][EXE/PSS][EXK/PSS] [EXN/PSS]
22	02010-00008	*	WASHER	ﾜｯｼｬ	2	[EXC/PSS][EXE/PSS][EXK/PSS] [EXN/PSS]
23	01400-00008	*	NUT	ﾅｯﾄ	2	[EXC/PSS][EXE/PSS][EXK/PSS] [EXN/PSS]
24	02000-00008	*	WASHER	ﾜｯｼｬ	2	[EXC/PSS][EXE/PSS][EXK/PSS] [EXN/PSS]
25	04901-00160	*	FITTING	ﾌｨｯﾃｨﾝｸﾞ	5	[EXC/PSS][EXE/PSS][EXK/PSS] [EXN/PSS]
26	22199-12401	*	CAP,NIPPLE	ｷｬｯﾌﾟ	7	[EXC/PSS][EXE/PSS][EXK/PSS] [EXN/PSS]
A2	24234-30551		END-ASSY,ROD,RH	ｴﾝﾄﾞｱｯｾﾝ	2	[EXC/PSS][EXE/PSS][EXK/PSS] [EXN/PSS] INC.27-29
27	NO PART NO.	#	END,ROD,RH	ｴﾝﾄﾞ	2	[EXC/PSS][EXE/PSS][EXK/PSS] [EXN/PSS]
28	01412-10016		NUT,CASTLE	ﾅｯﾄ	2	[EXC/PSS][EXE/PSS][EXK/PSS] [EXN/PSS]
29	02200-32032		PIN,COTTER	ﾋﾟﾝ	2	[EXC/PSS][EXE/PSS][EXK/PSS] [EXN/PSS]
A3	24234-30561		END-ASSY,ROD,LH	ｴﾝﾄﾞｱｯｾﾝ	2	[EXC/PSS][EXE/PSS][EXK/PSS] [EXN/PSS] INC.30-32
30	NO PART NO.	#	END,ROD,LH	ｴﾝﾄﾞ	2	[EXC/PSS][EXE/PSS][EXK/PSS] [EXN/PSS]
31	01412-10016		NUT,CASTLE	ﾅｯﾄ	2	[EXC/PSS][EXE/PSS][EXK/PSS] [EXN/PSS]
32	02200-32032		PIN,COTTER	ﾋﾟﾝ	2	[EXC/PSS][EXE/PSS][EXK/PSS] [EXN/PSS]
33	24234-32271		ROD,TIE	ﾛｯﾄﾞ	2	[EXC/PSS][EXE/PSS][EXK/PSS] [EXN/PSS]
34	24234-32411		NUT,RH	ﾅｯﾄ	2	[EXC/PSS][EXE/PSS][EXK/PSS] [EXN/PSS]
35	24234-32421		NUT,LH	ﾅｯﾄ	2	[EXC/PSS][EXE/PSS][EXK/PSS] [EXN/PSS]
36	24234-32221		HUB	ﾊﾌﾞ	2	[EXC/PSS][EXE/PSS][EXK/PSS] [EXN/PSS]
37	12003-43021		BEARING	ﾍﾞｱﾘﾝｸﾞ	2	[EXC/PSS][EXE/PSS][EXK/PSS] [EXN/PSS]
38	03071-30206		BEARING	ﾍﾞｱﾘﾝｸﾞ	2	[EXC/PSS][EXE/PSS][EXK/PSS] [EXN/PSS]
39	22574-32102		SEAL,OIL	ｼｰﾙ	2	[EXC/PSS][EXE/PSS][EXK/PSS] [EXN/PSS]

FIG.64 STEERING AXLE [(EXC,EXE,EXK,EXN)/PSS]

(F6014330) ステアリング アクスル

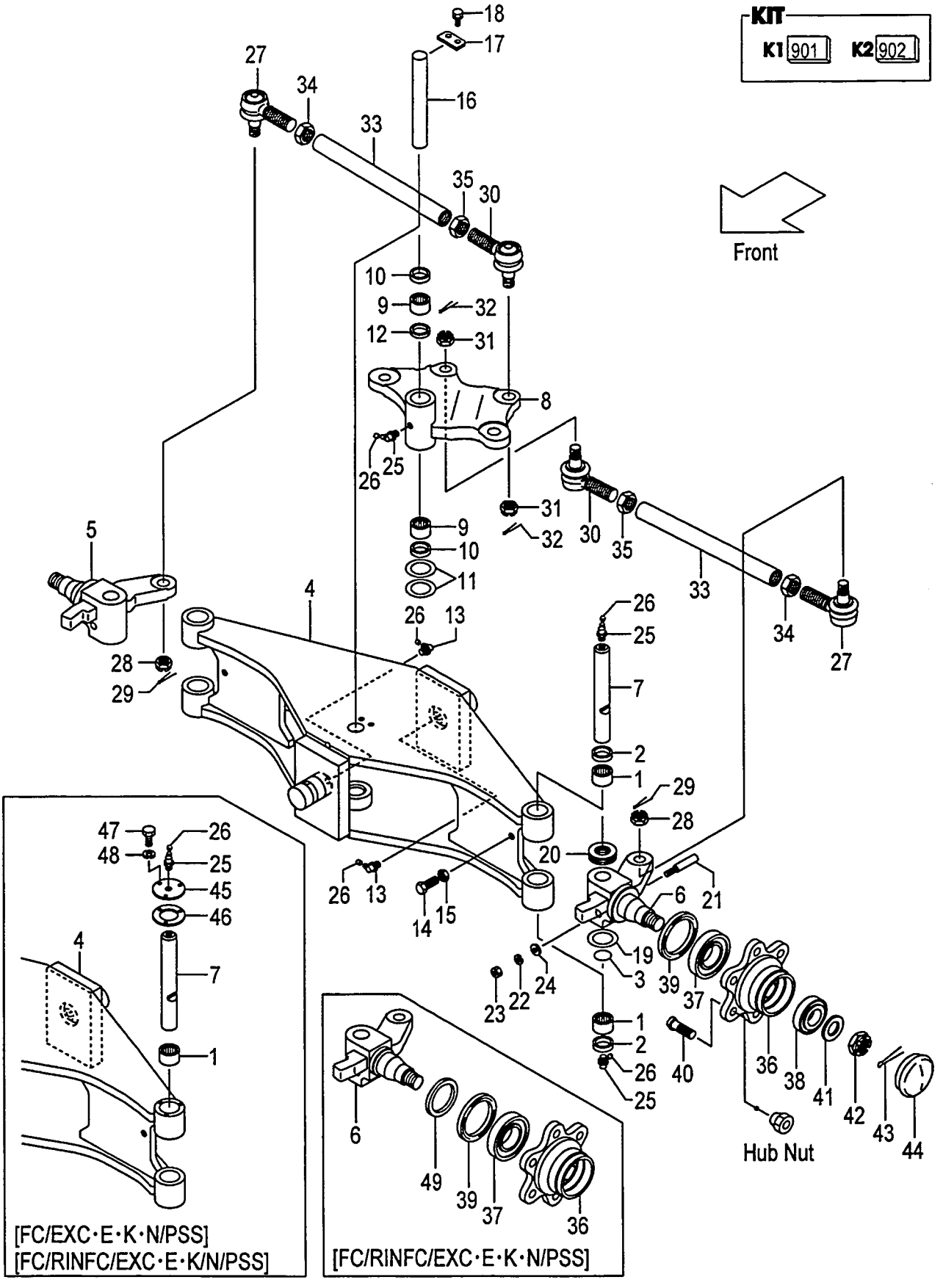

A:FD10C12 FD10T12 FD15C12 FD15T12 FD18C12 FD18T12

Item No	Part No.	Mark	Description		Req'd	Remarks : Serial No.
40	23654-32041		BOLT,HUB	ﾎﾞﾙﾄ	12	[EXC/PSS][EXE/PSS][EXK/PSS] [EXN/PSS]
41	02000-00024		WASHER	ﾜｯｼｬ	2	[EXC/PSS][EXE/PSS][EXK/PSS] [EXN/PSS]
42	01412-00024		NUT,CASTLE	ﾅｯﾄ	2	[EXC/PSS][EXE/PSS][EXK/PSS] [EXN/PSS]
43	02200-05045		PIN,COTTER	ﾋﾟﾝ	2	[EXC/PSS][EXE/PSS][EXK/PSS] [EXN/PSS]
44	22194-32361		CAP	ｷｬｯﾌﾟ	2	[EXC/PSS][EXE/PSS][EXK/PSS] [EXN/PSS]
45	57393-72251		PLATE,CAP	ﾌﾟﾚｰﾄ	2	[FC/EXC&E&K&N/PSS] [FC/RINFC/EXC&E&K&N/PSS]
46	57393-72262		PACKING	ﾊﾟｯｷﾝｸﾞ	2	[FC/EXC&E&K&N/PSS] [FC/RINFC/EXC&E&K&N/PSS]
47	01141-04012		BOLT	ﾎﾞﾙﾄ	6	[FC/EXC&E&K&N/PSS] [FC/RINFC/EXC&E&K&N/PSS]
48	02010-10004		WASHER	ﾜｯｼｬ	6	[FC/EXC&E&K&N/PSS] [FC/RINFC/EXC&E&K&N/PSS]
49	57393-72041		SEAT,OIL-SEAL	ｼｰﾄ	2	[FC/RINFC/EXC&E&K&N/PSS]

FIG.65 AXLE SUPPORT
(F6014340) アクスルサポート

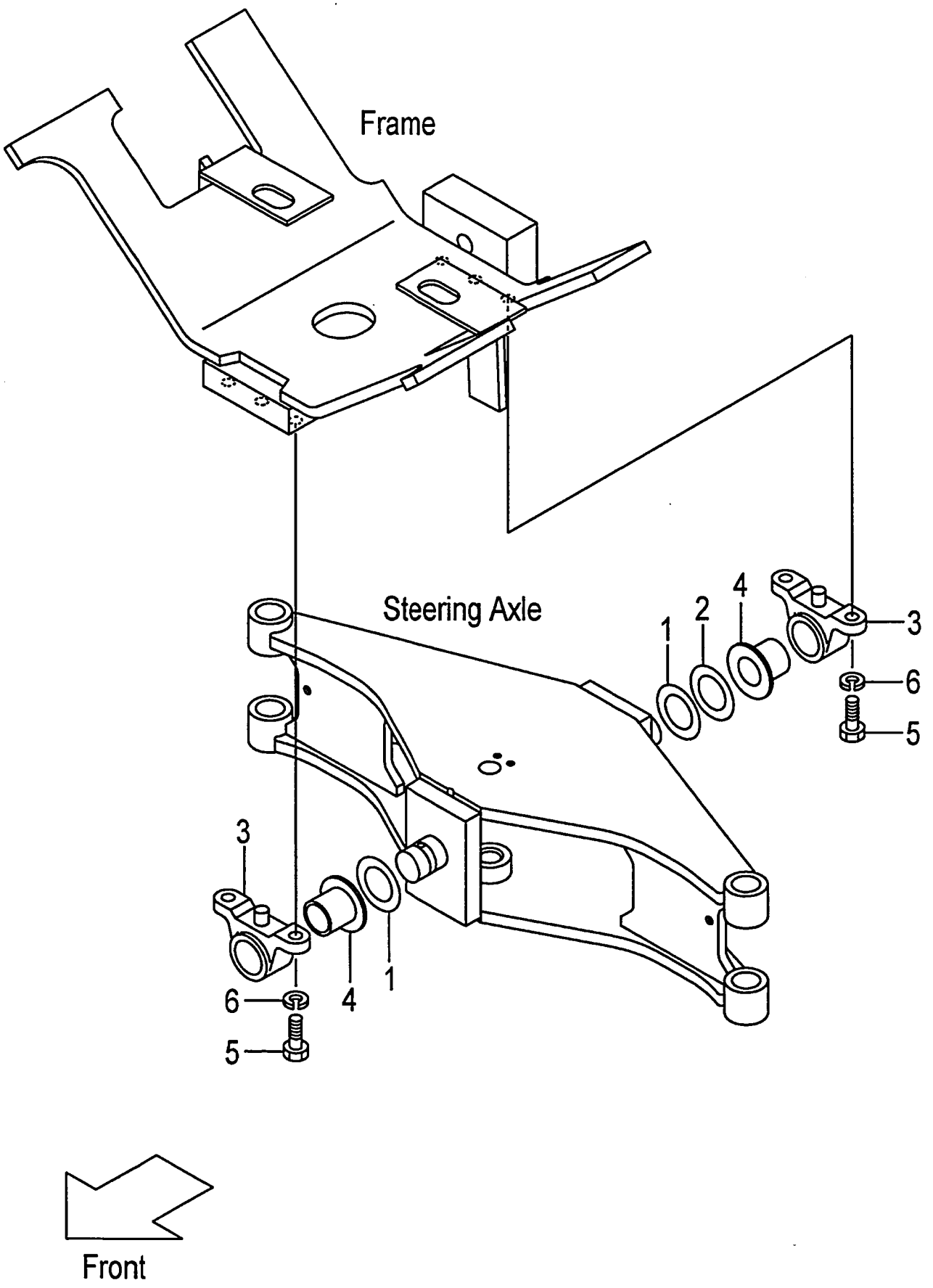

FIG.65
(F6014340)

A:FD10C12 FD10T12 FD15C12 FD15T12 FD18C12 FD18T12

Item No	Part No.	Mark	Description		Req'd	Remarks : Serial No.
1	23458-52031		SHIM,T-1.0	ｼﾑ	2	
2	24234-32501		SHIM,T-0.5	ｼﾑ	1	
3	24236-12572		SUPPORT,REAR-AXLE	ｻﾎﾟｰﾄ	2	
4	24236-12581		BUSHING	ﾌﾞｯｼﾝｸﾞ	2	
5	01100-14040		BOLT	ﾎﾞﾙﾄ	4	
6	02010-00014		WASHER	ﾜｯｼｬ	4	

FIG.66 HUB NUT
(F6014410) ﾊﾌﾞﾅｯﾄ

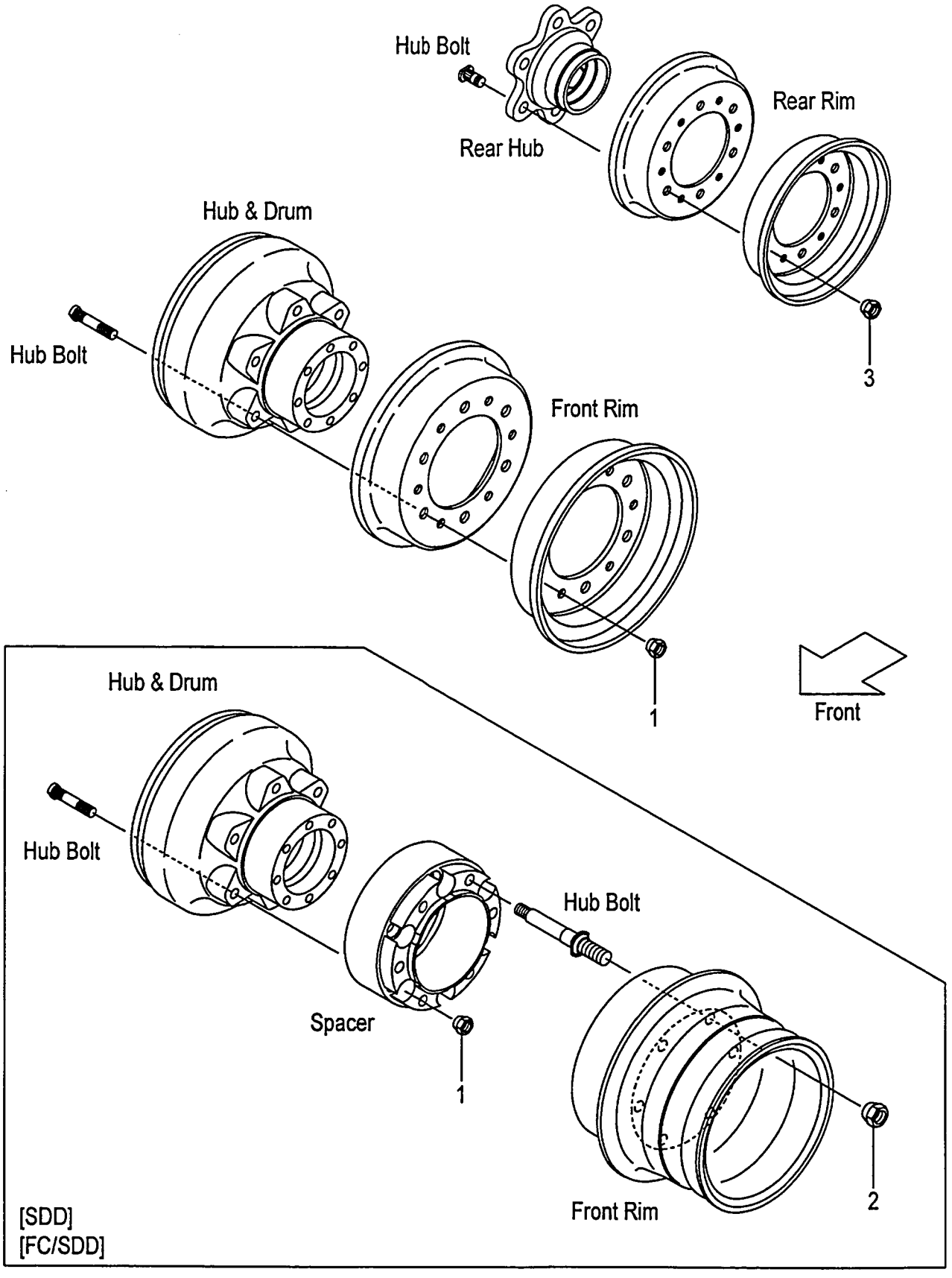

A:FD10C12 FD10T12 FD15C12 FD15T12 FD18C12 FD18T12

Item No	Part No.	Mark	Description	Req'd	Remarks : Serial No.
1	23654-34051		NUT,HUB ﾅｯﾄ	12	(FRONT)
-	57045-52151		NUT,HUB ﾅｯﾄ	12	[FC][FC/SDD](FRONT)
2	54237-43021		NUT,HUB ﾅｯﾄ	12	[SDD](FRONT-OUTSIDE)
-	54023-72081		NUT,HUB ﾅｯﾄ	12	[FC/SDD](FRONT-OUTSIDE)
3	23654-34051		NUT,HUB ﾅｯﾄ	12	(REAR)
-	57045-52151		NUT,HUB ﾅｯﾄ	12	[FC](REAR)

FIG.67 FRONT WHEEL (1.0T,1.5T)

(F6014420) フロントホイール

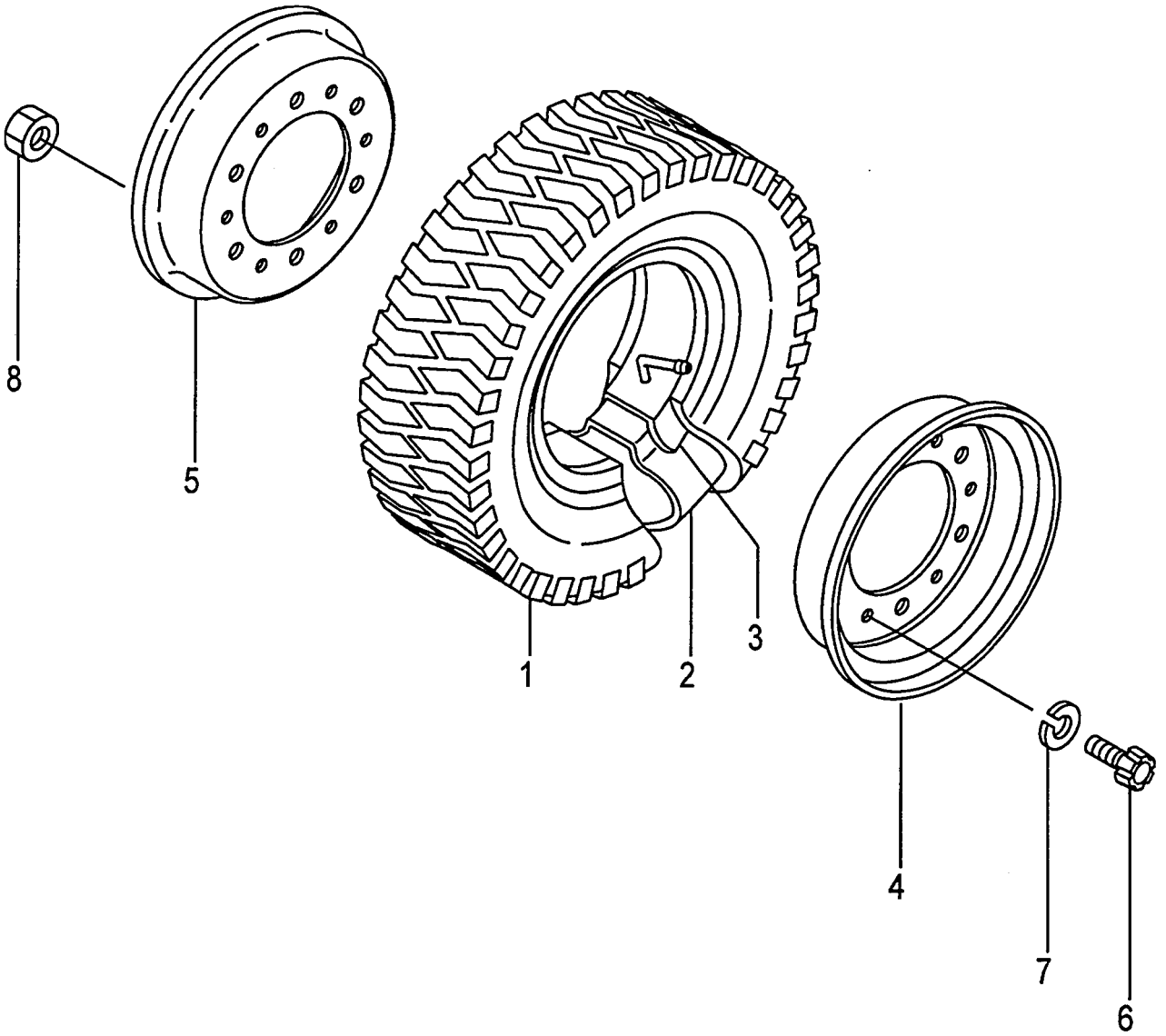

A:FD10C12 FD10T12
B:FD15C12 FD15T12

FIG.67
(F6014420)

Item No	Part No.	Mark	Description		Req'd	Remarks : Serial No.
A1	24154-40101		WHEEL-ASSY,FRONT	ﾌﾛﾝﾄﾎｲｰﾙｱｯｾﾝ	2	A INC.1-8
-	52576-80902		WHEEL-ASSY,FRONT	ﾌﾛﾝﾄﾎｲｰﾙｱｯｾﾝ	2	B INC.1-8
-	52576-80902		WHEEL-ASSY,FRONT	ﾌﾛﾝﾄﾎｲｰﾙｱｯｾﾝ	2	A [EX] INC.1-8
1	06009-65010		TIRE,650-10-8	ﾀｲﾔ	2	A
-	06006-65010		TIRE,650-10-10	ﾀｲﾔ	2	B
-	06006-65010		TIRE,650-10-10	ﾀｲﾔ	2	A [EX]
2	06712-65010		TUBE,650-10-10T	ﾁｭｰﾌﾞ	2	A
-	06711-65010		TUBE,650-10-10T	ﾁｭｰﾌﾞ	2	B
-	06711-65010		TUBE,650-10-10T	ﾁｭｰﾌﾞ	2	A [EX]
3	06702-65010		FLAP,650-10-10F	ﾌﾗｯﾌﾟ	2	A
-	06701-65010		FLAP,650-10-10F	ﾌﾗｯﾌﾟ	2	B
-	06701-65010		FLAP,650-10-10F	ﾌﾗｯﾌﾟ	2	A [EX]
A2	22574-40303		RIM-ASSY,500F-10	ﾘﾑｱｯｾﾝ	2	INC.4-8
4	NO PART NO.	#	RIM,OUTSIDE	ﾘﾑ	2	
5	NO PART NO.	#	RIM,INSIDE	ﾘﾑ	2	
6	510F3-82611		BOLT	ﾎﾞﾙﾄ	12	
7	02011-00012		WASHER	ﾜｯｼｬ	12	
8	01402-10012		NUT	ﾅｯﾄ	12	

FIG.68 FRONT WHEEL (1.8T)

(F6014430) フロントホイール

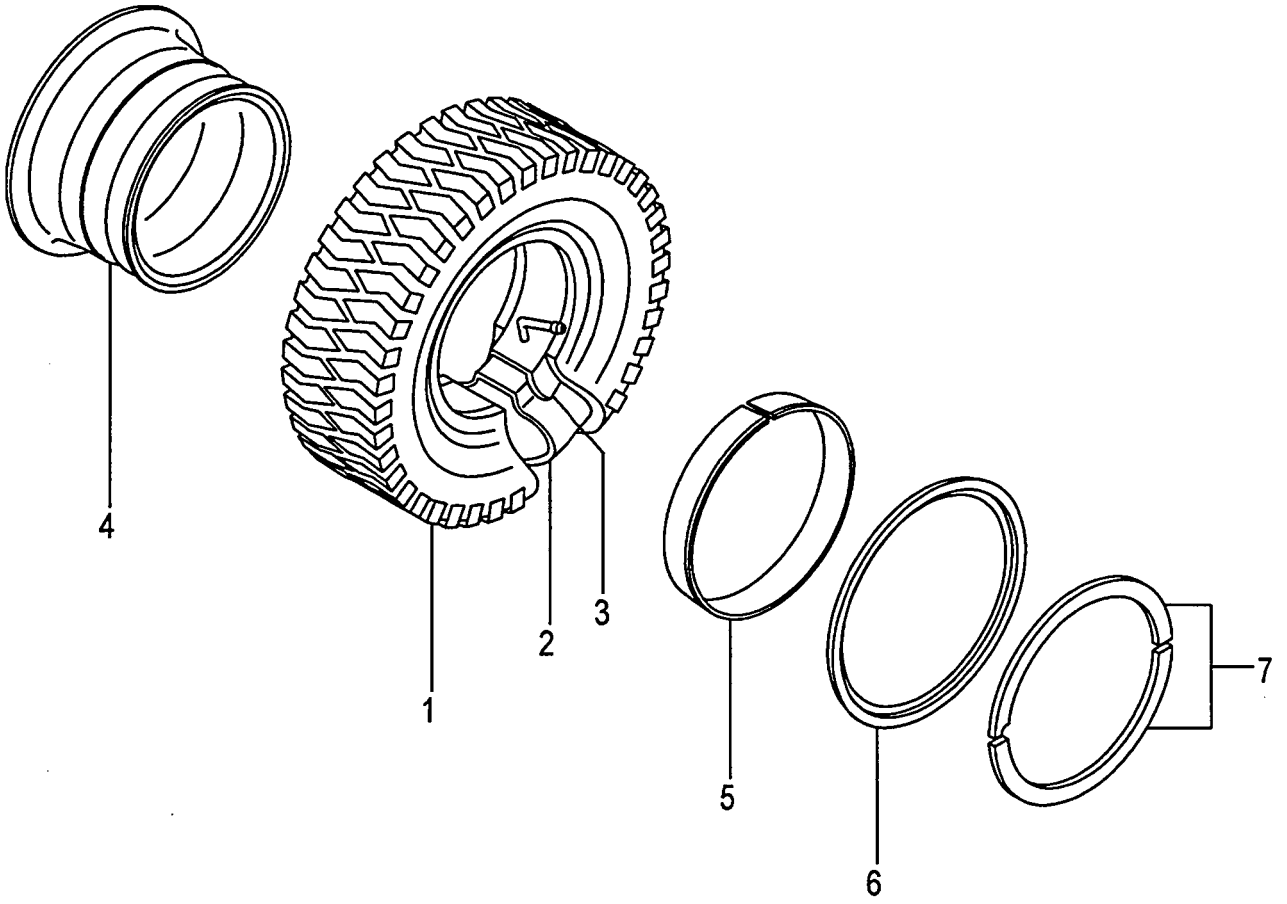

A:FD18C12 FD18T12

Item No	Part No.	Mark	Description		Req'd	Remarks : Serial No.
A1	54276-80401		WHEEL-ASSY,FRONT	ﾌﾛﾝﾄﾎｲｰﾙｱｯｾﾝ	2	INC.1-7
1	06006-65010		TIRE,650-10-10	ﾀｲﾔ	2	
2	06711-65010		TUBE,650-10-10T	ﾁｭｰﾌﾞ	2	
3	06701-65010		FLAP,650-10-10F	ﾌﾗｯﾌﾟ	2	
A2	24274-40501		RIM-ASSY,500F-10	ﾘﾑｱｯｾﾝ	2	INC.4-7
4	NO PART NO.	#	RIM	ﾘﾑ	2	
5	54236-83011		BAND	ﾊﾞﾝﾄﾞ	2	
6	54236-83021		FLANGE,SIDE	ﾌﾗﾝｼﾞ	2	
7	54236-83031		RING,LOCK	ﾘﾝｸﾞ	2	

FIG.69 FRONT WHEEL (1.0T,1.5T):[DR F]

(F6014440) フロントホイール

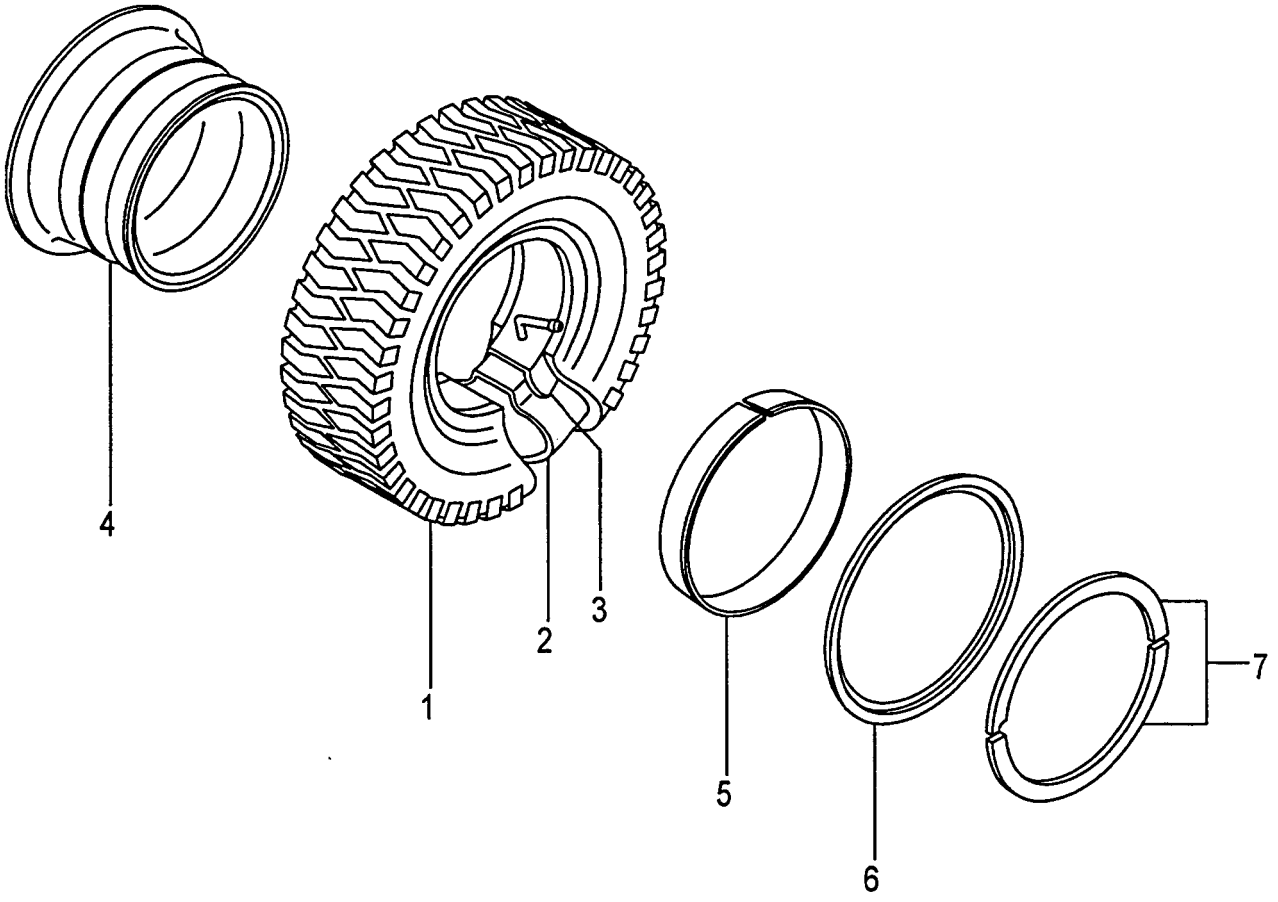

A:FD10C12 FD10T12
B:FD15C12 FD15T12

FIG.69
(F6014440)

Item No	Part No.	Mark	Description		Req'd	Remarks : Serial No.
A1	516B6-80302		WHEEL-ASSY,FRONT	ﾌﾛﾝﾄﾎｲｰﾙｱｯｾﾝ	2	A [DR F] INC.1-7
-	54236-80141		WHEEL-ASSY,FRONT	ﾌﾛﾝﾄﾎｲｰﾙｱｯｾﾝ	2	B [DR F] INC.1-7
-	54236-80141		WHEEL-ASSY,FRONT	ﾌﾛﾝﾄﾎｲｰﾙｱｯｾﾝ	2	A [EX/DR F] INC.1-7
1	06009-65010		TIRE,650-10-8	ﾀｲﾔ	2	A [DR F]
-	06006-65010		TIRE,650-10-10	ﾀｲﾔ	2	B [DR F]
-	06006-65010		TIRE,650-10-10	ﾀｲﾔ	2	A [EX/DR F]
2	06712-65010		TUBE,650-10-10T	ﾁｭｰﾌﾞ	2	A [DR F]
-	06711-65010		TUBE,650-10-10T	ﾁｭｰﾌﾞ	2	B [DR F]
-	06711-65010		TUBE,650-10-10T	ﾁｭｰﾌﾞ	2	A [EX/DR F]
3	06702-65010		FLAP,650-10-10F	ﾌﾗｯﾌﾟ	2	A [DR F]
-	06701-65010		FLAP,650-10-10F	ﾌﾗｯﾌﾟ	2	B [DR F]
-	06701-65010		FLAP,650-10-10F	ﾌﾗｯﾌﾟ	2	A [EX/DR F]
A2	54236-80181		RIM-ASSY,500F-10	ﾘﾑｱｯｾﾝ	2	[DR F] INC.4-7
4	NO PART NO.	#	RIM	ﾘﾑ	2	[DR F]
5	54236-83011		BAND	ﾊﾞﾝﾄﾞ	2	[DR F]
6	54236-83021		FLANGE,SIDE	ﾌﾗﾝｼﾞ	2	[DR F]
7	54236-83031		RING,LOCK	ﾘﾝｸﾞ	2	[DR F]

FIG.70 FRONT WHEEL (1.0T,1.5T):[TJ F][TJSF][T F][TS F]

(F6014450) フロントホイール

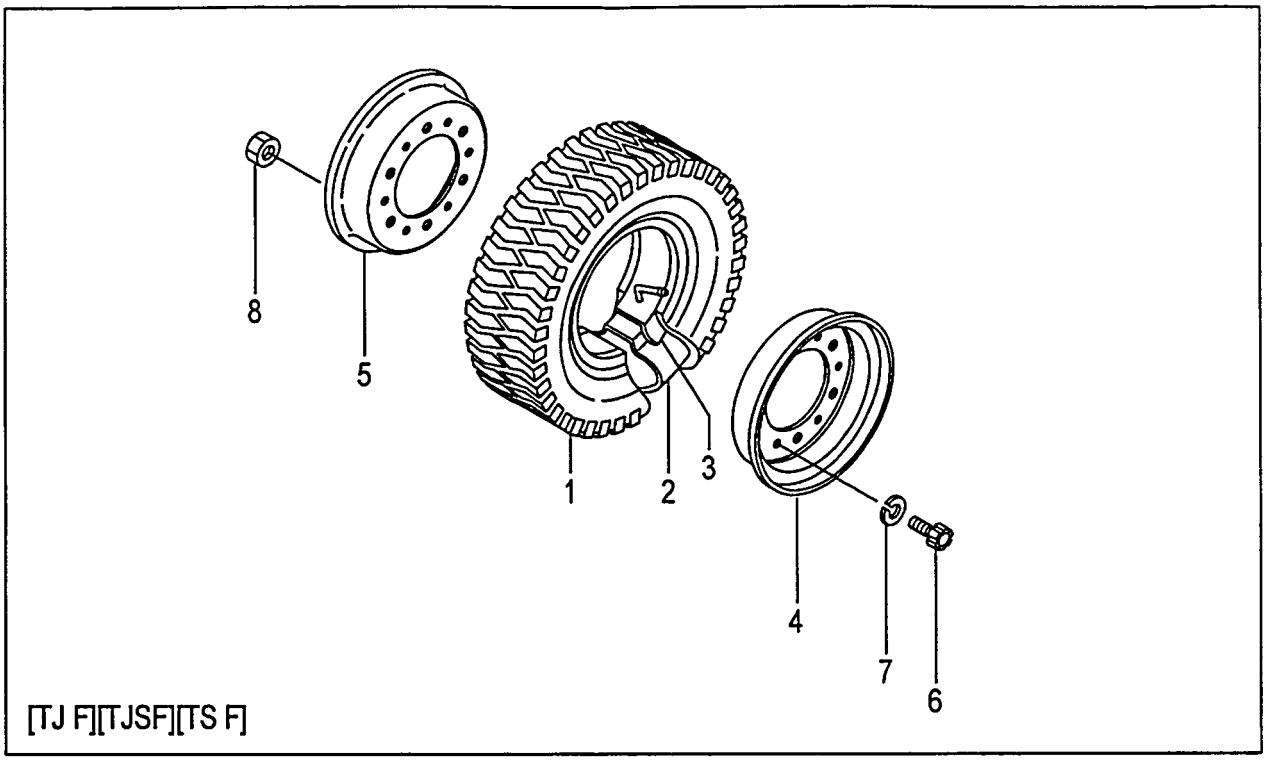

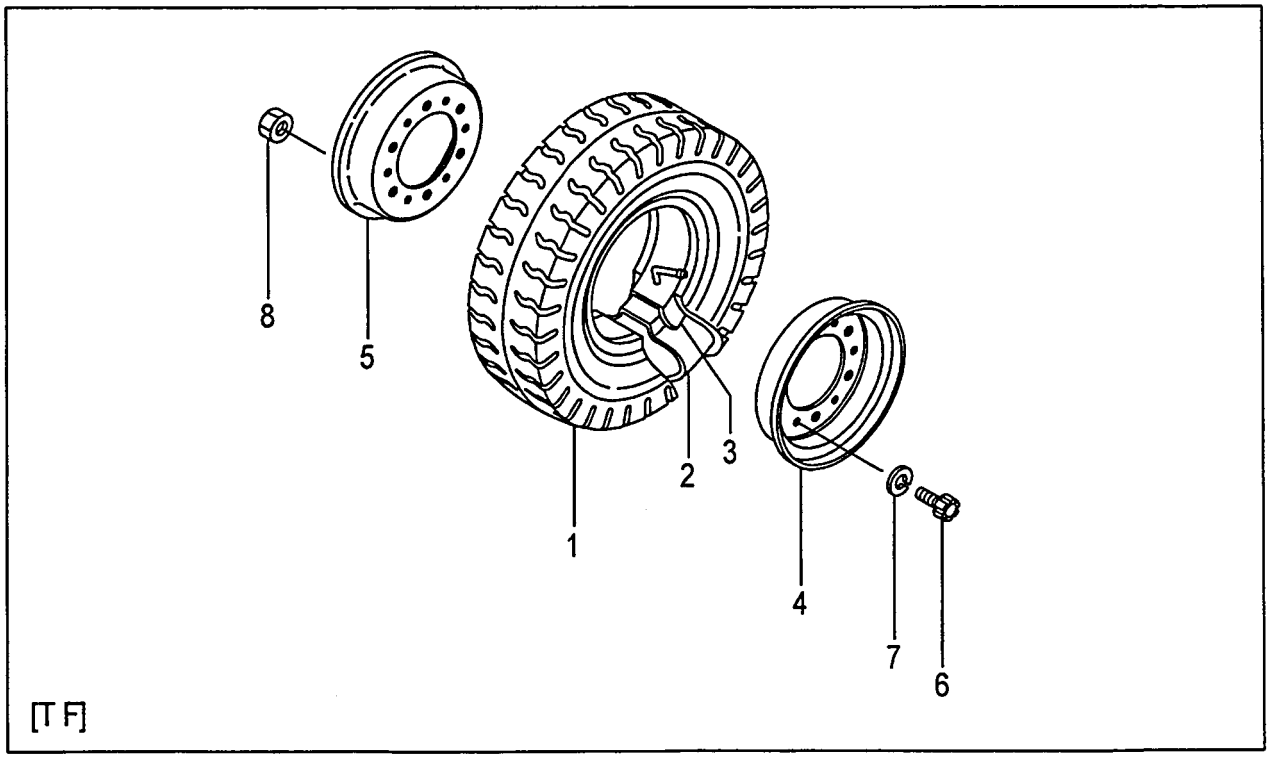

A:FD10C12 FD10T12
B:FD15C12 FD15T12

FIG.70
(F6014450)

Item No	Part No.	Mark	Description		Req'd	Remarks : Serial No.
A1	24154-40101		WHEEL-ASSY,FRONT	ﾌﾛﾝﾄﾎｲｰﾙｱｯｾﾝ	2	A [TJ F] INC.1-8
-	52576-80902		WHEEL-ASSY,FRONT	ﾌﾛﾝﾄﾎｲｰﾙｱｯｾﾝ	2	B [TJ F] INC.1-8
-	52576-80902		WHEEL-ASSY,FRONT	ﾌﾛﾝﾄﾎｲｰﾙｱｯｾﾝ	2	A [TJ F/EX] INC.1-8
-	52576-80702		WHEEL-ASSY,FRONT	ﾌﾛﾝﾄﾎｲｰﾙｱｯｾﾝ	2	[TJSF] INC.1-8
-	25414-40201		WHEEL-ASSY,FRONT	ﾌﾛﾝﾄﾎｲｰﾙｱｯｾﾝ	2	A [T F] INC.1-8
-	22574-40202		WHEEL-ASSY,FRONT	ﾌﾛﾝﾄﾎｲｰﾙｱｯｾﾝ	2	B [T F] INC.1-8
-	22574-40202		WHEEL-ASSY,FRONT	ﾌﾛﾝﾄﾎｲｰﾙｱｯｾﾝ	2	A [T F/EX] INC.1-8
-	52576-80502		WHEEL-ASSY,FRONT	ﾌﾛﾝﾄﾎｲｰﾙｱｯｾﾝ	2	[TS F] INC.1-8
1	06009-65010		TIRE,650-10-8	ﾀｲﾔ	2	A [TJ F]
-	06006-65010		TIRE,650-10-10	ﾀｲﾔ	2	B [TJ F]
-	06006-65010		TIRE,650-10-10	ﾀｲﾔ	2	A [TJ F/EX]
-	06005-65010		TIRE,650-10-10	ﾀｲﾔ	2	[TJSF]
-	06002-65010		TIRE,650-10-8	ﾀｲﾔ	2	A [T F]
-	06001-65010		TIRE,650-10-10	ﾀｲﾔ	2	B [T F]
-	06001-65010		TIRE,650-10-10	ﾀｲﾔ	2	A [T F/EX]
-	06007-65010		TIRE,650-10-10	ﾀｲﾔ	2	[TS F]
2	06712-65010		TUBE,650-10-10T	ﾁｭｰﾌﾞ	2	A [TJ F][T F]
-	06711-65010		TUBE,650-10-10T	ﾁｭｰﾌﾞ	2	B [TJ F][T F]
-	06711-65010		TUBE,650-10-10T	ﾁｭｰﾌﾞ	2	A [TJ F/EX][T F/EX]
-	06711-65010		TUBE,650-10-10T	ﾁｭｰﾌﾞ	2	[TJSF][TS F]
3	06702-65010		FLAP,650-10-10F	ﾌﾗｯﾌﾟ	2	A [TJ F][T F]
-	06701-65010		FLAP,650-10-10F	ﾌﾗｯﾌﾟ	2	B [TJ F][T F]
-	06701-65010		FLAP,650-10-10F	ﾌﾗｯﾌﾟ	2	A [TJ F/EX][T F/EX]
-	06701-65010		FLAP,650-10-10F	ﾌﾗｯﾌﾟ	2	[TJSF][TS F]
A2	22574-40303		RIM-ASSY,500F-10	ﾘﾑｱｯｾﾝ	2	[TJ F][TJSF][T F][TS F] INC.4-8
4	NO PART NO.	#	RIM,OUTSIDE	ﾘﾑ	2	[TJ F][TJSF][T F][TS F]
5	NO PART NO.	#	RIM,INSIDE	ﾘﾑ	2	[TJ F][TJSF][T F][TS F]
6	510F3-82611		BOLT	ﾎﾞﾙﾄ	12	[TJ F][TJSF][T F][TS F]
7	02011-00012		WASHER	ﾜｯｼｬ	12	[TJ F][TJSF][T F][TS F]
8	01402-10012		NUT	ﾅｯﾄ	12	[TJ F][TJSF][T F][TS F]

FIG.71 FRONT WHEEL (1.8T):[TJ F][TJSF][T F][TS F]

(F6014460) フロントホイール

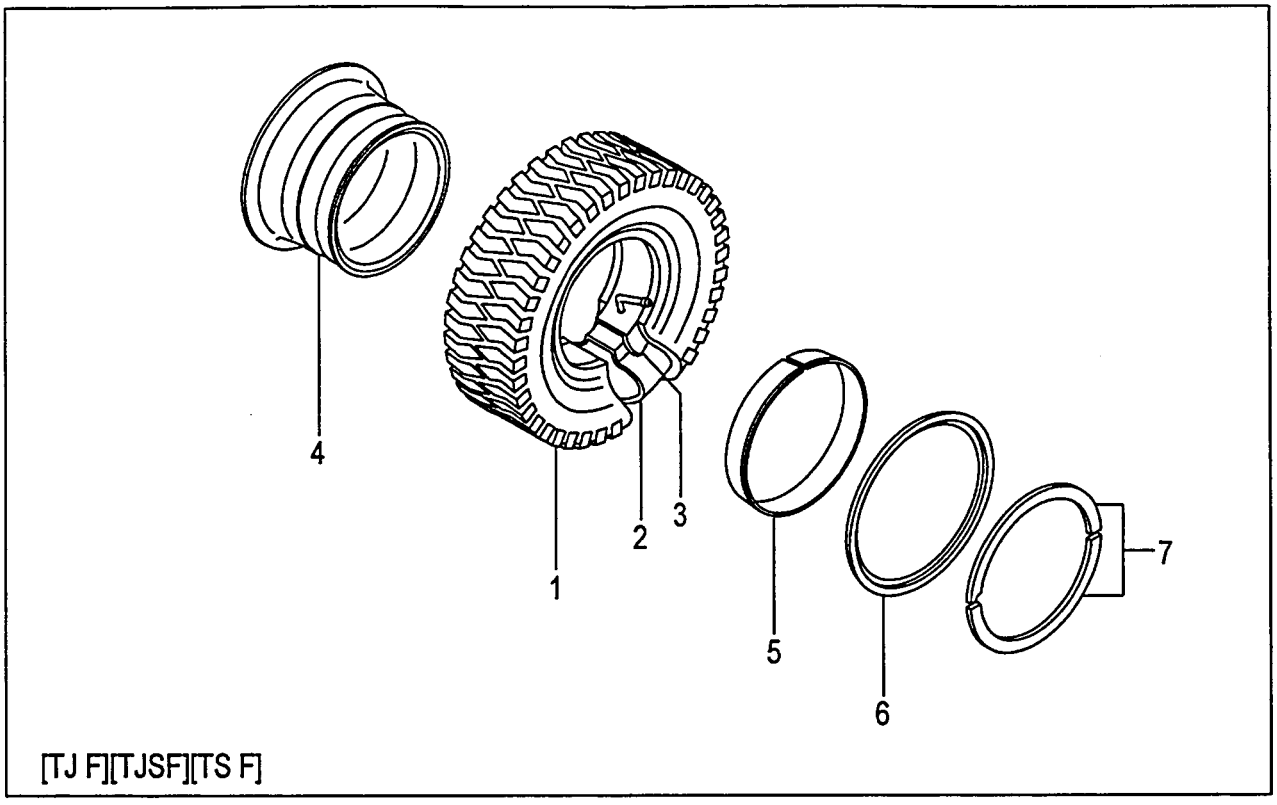

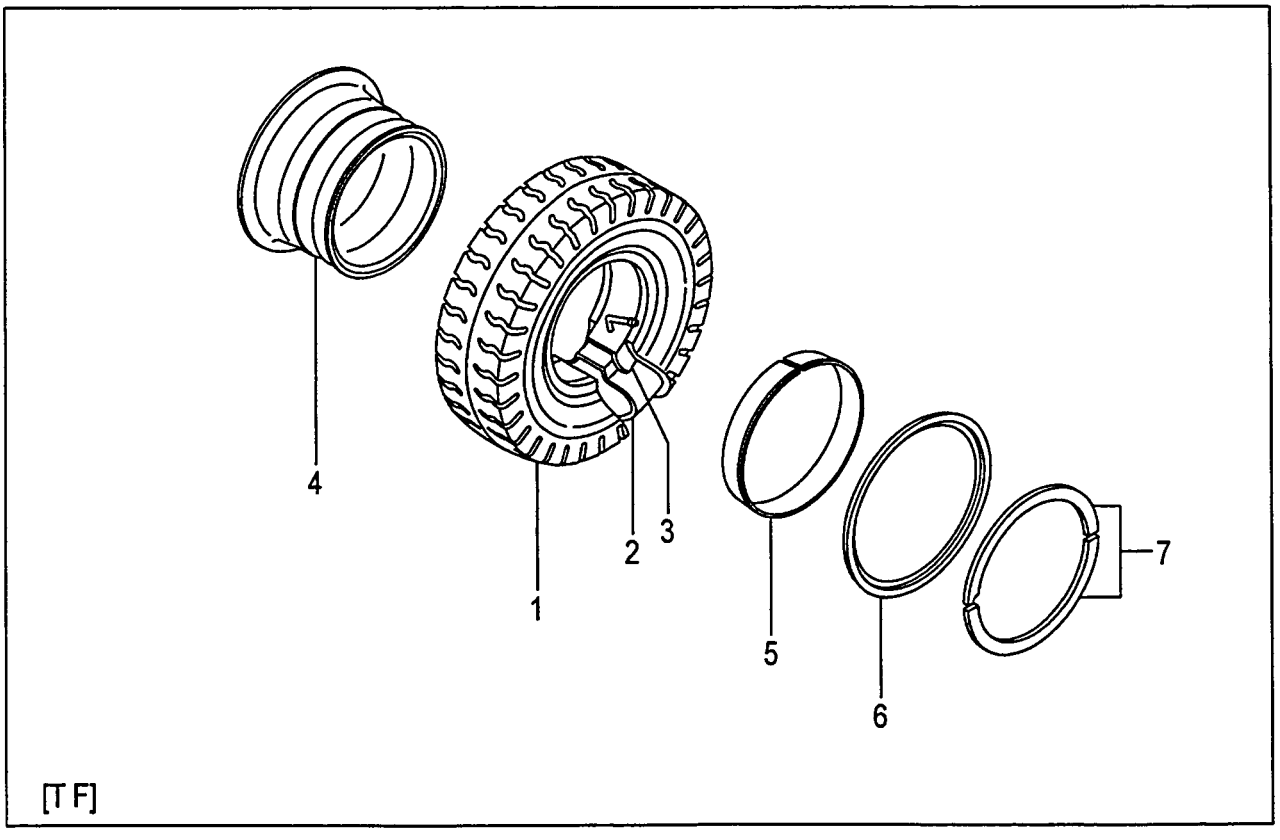

A:FD18C12 FD18T12

Item No	Part No.	Mark	Description		Req'd	Remarks : Serial No.
A1	54276-80401		WHEEL-ASSY,FRONT	ﾌﾛﾝﾄﾎｲｰﾙｱｯｾﾝ	2	[TJ F] INC.1-7
-	54276-80301		WHEEL-ASSY,FRONT	ﾌﾛﾝﾄﾎｲｰﾙｱｯｾﾝ	2	[TJSF] INC.1-7
-	24274-40201		WHEEL-ASSY,FRONT	ﾌﾛﾝﾄﾎｲｰﾙｱｯｾﾝ	2	[T F] INC.1-7
-	54276-80501		WHEEL-ASSY,FRONT	ﾌﾛﾝﾄﾎｲｰﾙｱｯｾﾝ	2	[TS F] INC.1-7
1	06006-65010		TIRE,650-10-10	ﾀｲﾔ	2	[TJ F]
-	06005-65010		TIRE,650-10-10	ﾀｲﾔ	2	[TJSF]
-	06001-65010		TIRE,650-10-10	ﾀｲﾔ	2	[T F]
-	06007-65010		TIRE,650-10-10	ﾀｲﾔ	2	[TS F]
2	06711-65010		TUBE,650-10-10T	ﾁｭｰﾌﾞ	2	[TJ F][TJSF][T F][TS F]
3	06701-65010		FLAP,650-10-10F	ﾌﾗｯﾌﾟ	2	[TJ F][TJSF][T F][TS F]
A2	24274-40501		RIM-ASSY,500F-10	ﾘﾑｱｯｾﾝ	2	[TJ F][TJSF][T F][TS F] INC.4-7
4	NO PART NO.	#	RIM	ﾘﾑ	2	[TJ F][TJSF][T F][TS F]
5	54236-83011		BAND	ﾊﾞﾝﾄﾞ	2	[TJ F][TJSF][T F][TS F]
6	54236-83021		FLANGE,SIDE	ﾌﾗﾝｼﾞ	2	[TJ F][TJSF][T F][TS F]
7	54236-83031		RING,LOCK	ﾘﾝｸﾞ	2	[TJ F][TJSF][T F][TS F]

FIG.72 FRONT WHEEL (1.0T,1.5T):[(TJ F,TJSF,T F,TS F)/DR F]

(F6014470) フロントホイール

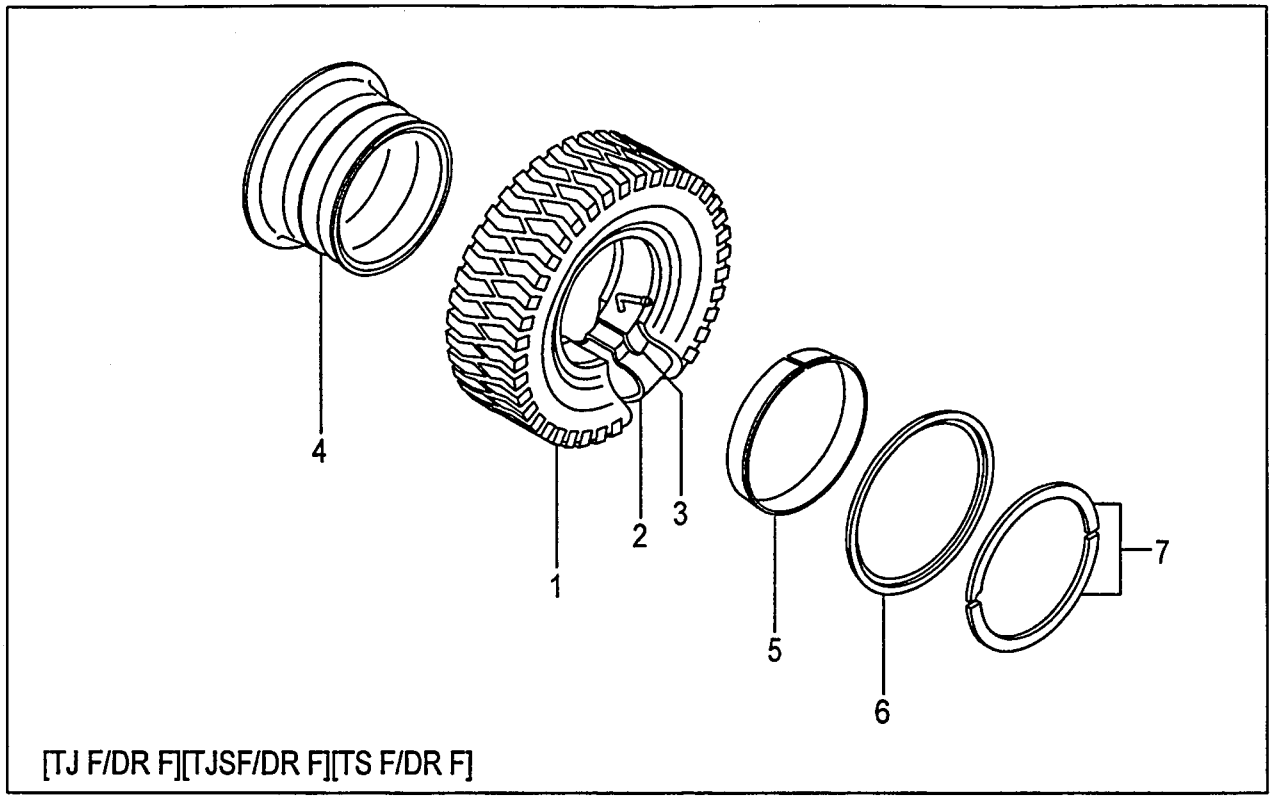

[TJ F/DR F][TJSF/DR F][TS F/DR F]

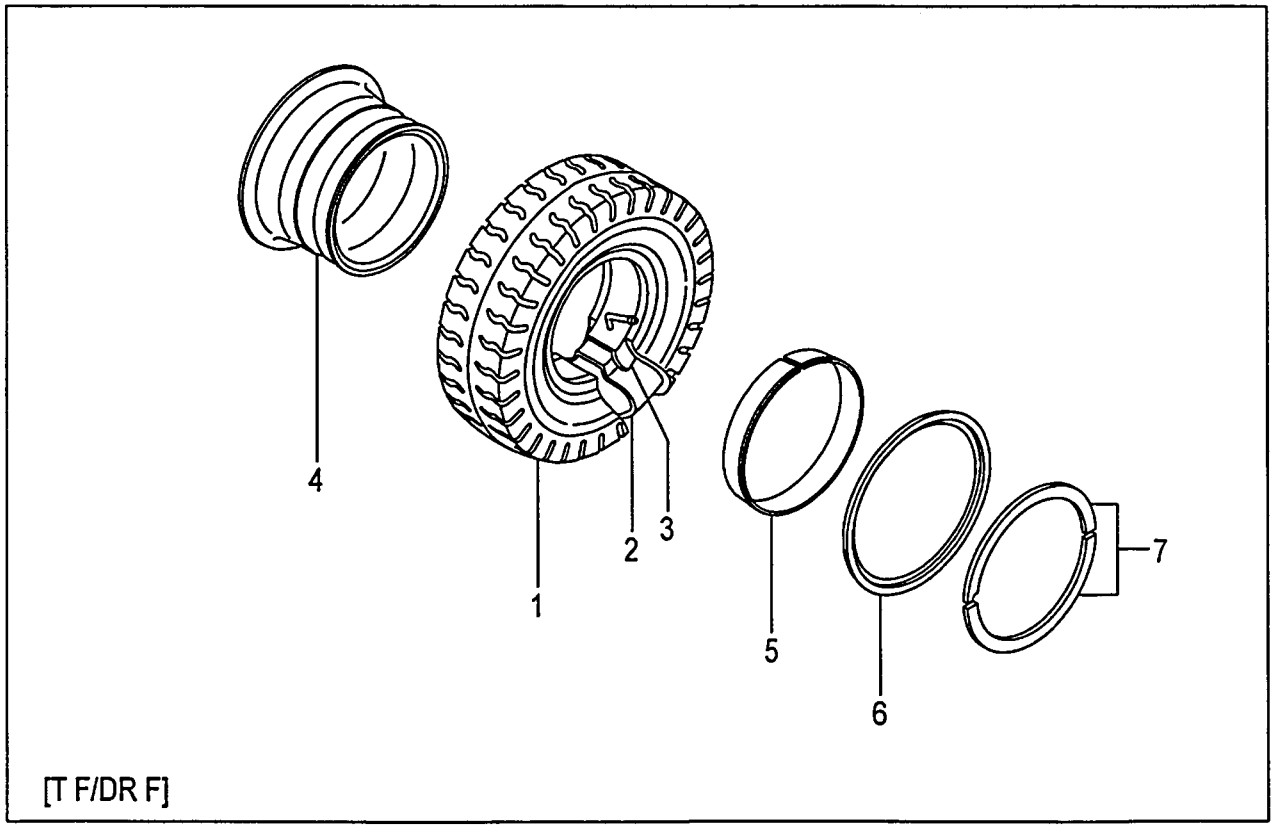

[T F/DR F]

A:FD10C12 FD10T12
B:FD15C12 FD15T12

FIG.72
(F6014470)

Item No	Part No.	Mark	Description		Req'd	Remarks : Serial No.
A1	516B6-80302		WHEEL-ASSY,FRONT	ﾌﾛﾝﾄﾎｲｰﾙｱｯｾﾝ	2	A [TJ F/DR F] INC.1-7
-	54236-80141		WHEEL-ASSY,FRONT	ﾌﾛﾝﾄﾎｲｰﾙｱｯｾﾝ	2	B [TJ F/DR F] INC.1-7
-	54236-80141		WHEEL-ASSY,FRONT	ﾌﾛﾝﾄﾎｲｰﾙｱｯｾﾝ	2	A [TJ F/EX/DR F] INC.1-7
-	54236-80131		WHEEL-ASSY,FRONT	ﾌﾛﾝﾄﾎｲｰﾙｱｯｾﾝ	2	[TJSF/DR F] INC.1-7
-	NO PART NO.		WHEEL-ASSY,FRONT	ﾌﾛﾝﾄﾎｲｰﾙｱｯｾﾝ	2	A [T F/DR F] INC.1-7
-	54236-80101		WHEEL-ASSY,FRONT	ﾌﾛﾝﾄﾎｲｰﾙｱｯｾﾝ	2	B [T F/DR F] INC.1-7
-	54236-80101		WHEEL-ASSY,FRONT	ﾌﾛﾝﾄﾎｲｰﾙｱｯｾﾝ	2	A [T F/EX/DR F] INC.1-7
-	54236-80151		WHEEL-ASSY,FRONT	ﾌﾛﾝﾄﾎｲｰﾙｱｯｾﾝ	2	[TS F/DR F] INC.1-7
1	06009-65010		TIRE,650-10-8	ﾀｲﾔ	2	A [TJ F/DR F]
-	06006-65010		TIRE,650-10-10	ﾀｲﾔ	2	B [TJ F/DR F]
-	06006-65010		TIRE,650-10-10	ﾀｲﾔ	2	A [TJ F/EX/DR F]
-	06005-65010		TIRE,650-10-10	ﾀｲﾔ	2	[TJSF/DR F]
-	06002-65010		TIRE,650-10-8	ﾀｲﾔ	2	A [T F/DR F]
-	06001-65010		TIRE,650-10-10	ﾀｲﾔ	2	B [T F/DR F]
-	06001-65010		TIRE,650-10-10	ﾀｲﾔ	2	A [T F/EX/DR F]
-	06007-65010		TIRE,650-10-10	ﾀｲﾔ	2	[TS F/DR F]
2	06712-65010		TUBE,650-10-10T	ﾁｭｰﾌﾞ	2	A [TJ F/DR F][T F/DR F]
-	06711-65010		TUBE,650-10-10T	ﾁｭｰﾌﾞ	2	B [TJ F/DR F][T F/DR F]
-	06711-65010		TUBE,650-10-10T	ﾁｭｰﾌﾞ	2	A [TJ F/EX/DR F][T F/EX/DR F]
-	06711-65010		TUBE,650-10-10T	ﾁｭｰﾌﾞ	2	[TJSF/DR F][TS F/DR F]
3	06702-65010		FLAP,650-10-10F	ﾌﾗｯﾌﾟ	2	A [TJ F/DR F][T F/DR F]
-	06701-65010		FLAP,650-10-10F	ﾌﾗｯﾌﾟ	2	B [TJ F/DR F][T F/DR F]
-	06701-65010		FLAP,650-10-10F	ﾌﾗｯﾌﾟ	2	A [TJ F/EX/DR F][T F/EX/DR F]
-	06701-65010		FLAP,650-10-10F	ﾌﾗｯﾌﾟ	2	[TJSF/DR F][TS F/DR F]
A2	54236-80181		RIM-ASSY,500F-10	ﾘﾑｱｯｾﾝ	2	[TJ F/DR F][T F/DR F] INC.4-7
-	54236-80181		RIM-ASSY,500F-10	ﾘﾑｱｯｾﾝ	2	[TJSF/DR F][TS F/DR F] INC.4-7
4	NO PART NO.	#	RIM	ﾘﾑ	2	[TJ F/DR F][TJSF/DR F] [T F/DR F][TS F/DR F]
5	54236-83011		BAND	ﾊﾞﾝﾄﾞ	2	[TJ F/DR F][TJSF/DR F] [T F/DR F][TS F/DR F]
6	54236-83021		FLANGE,SIDE	ﾌﾗﾝｼﾞ	2	[TJ F/DR F][TJSF/DR F] [T F/DR F][TS F/DR F]

FIG.72 FRONT WHEEL (1.0T,1.5T):[(TJ F,TJSF,T F,TS F)/DR F]

(F6014470) フロントホイール

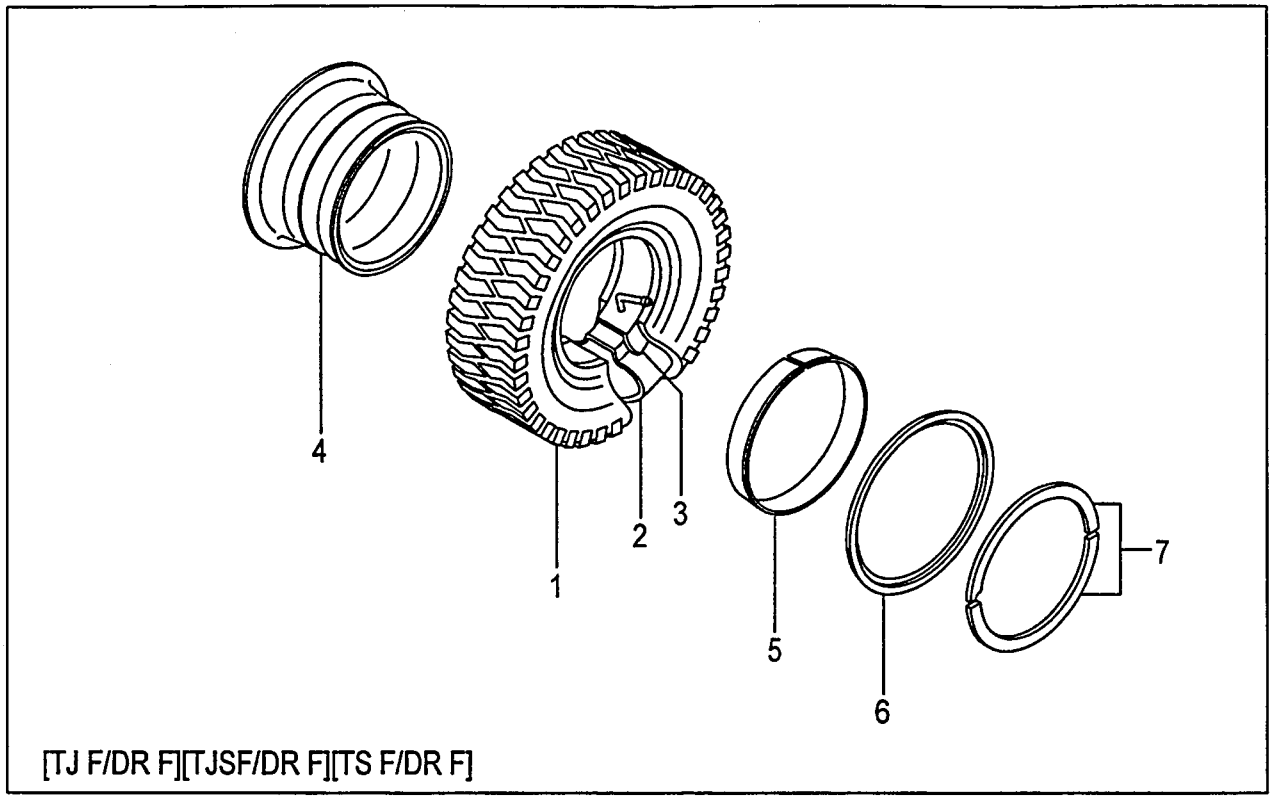

[TJ F/DR F][TJSF/DR F][TS F/DR F]

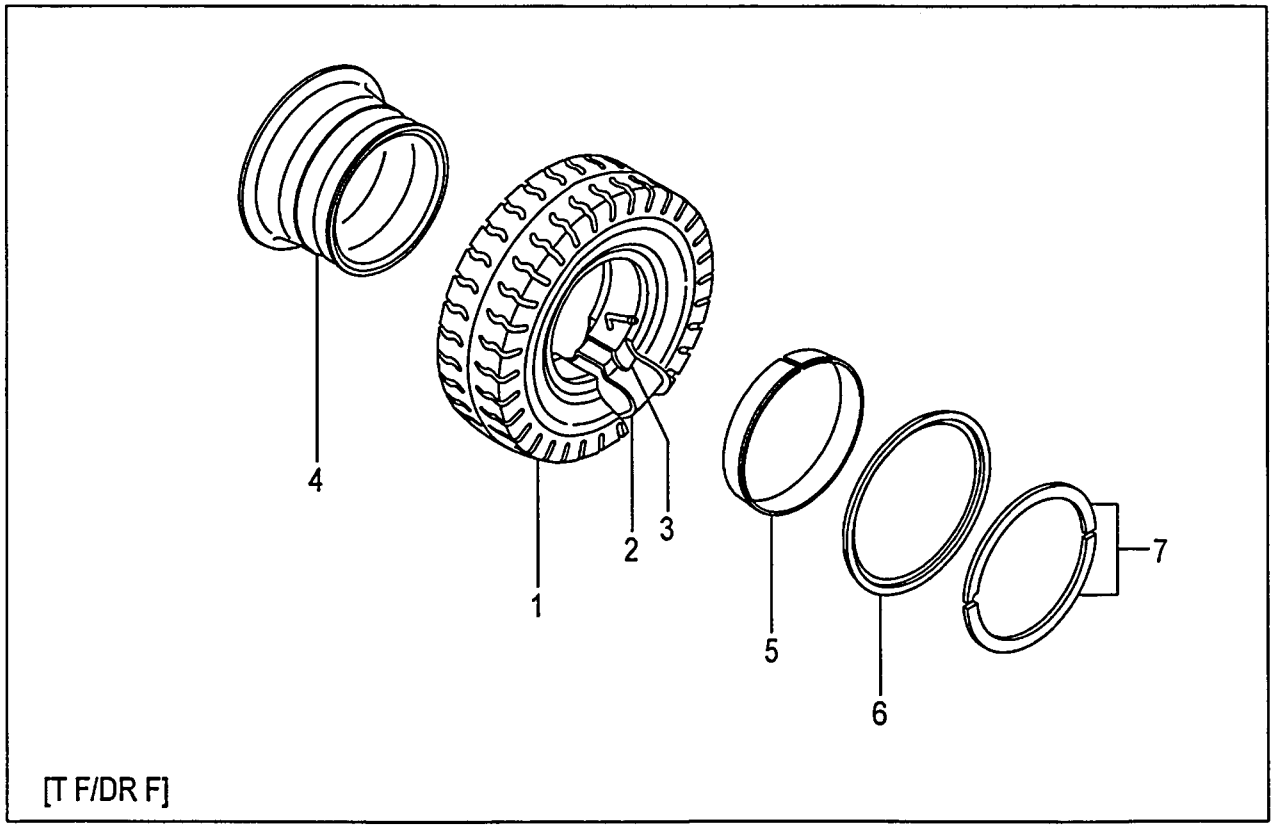

[T F/DR F]

FIG.72
(F6014470)

A:FD10C12 FD10T12
B:FD15C12 FD15T12

Item No	Part No.	Mark	Description	Req'd	Remarks : Serial No.
7	54236-83031		RING,LOCK リング	2	[TJ F/DR F][TJSF/DR F] [T F/DR F][TS F/DR F]

FIG.73 FRONT WHEEL (1.0T,1.5T):[TUJF][TUSF][TUWF][TUGF]

(F6014480) フロントホイール

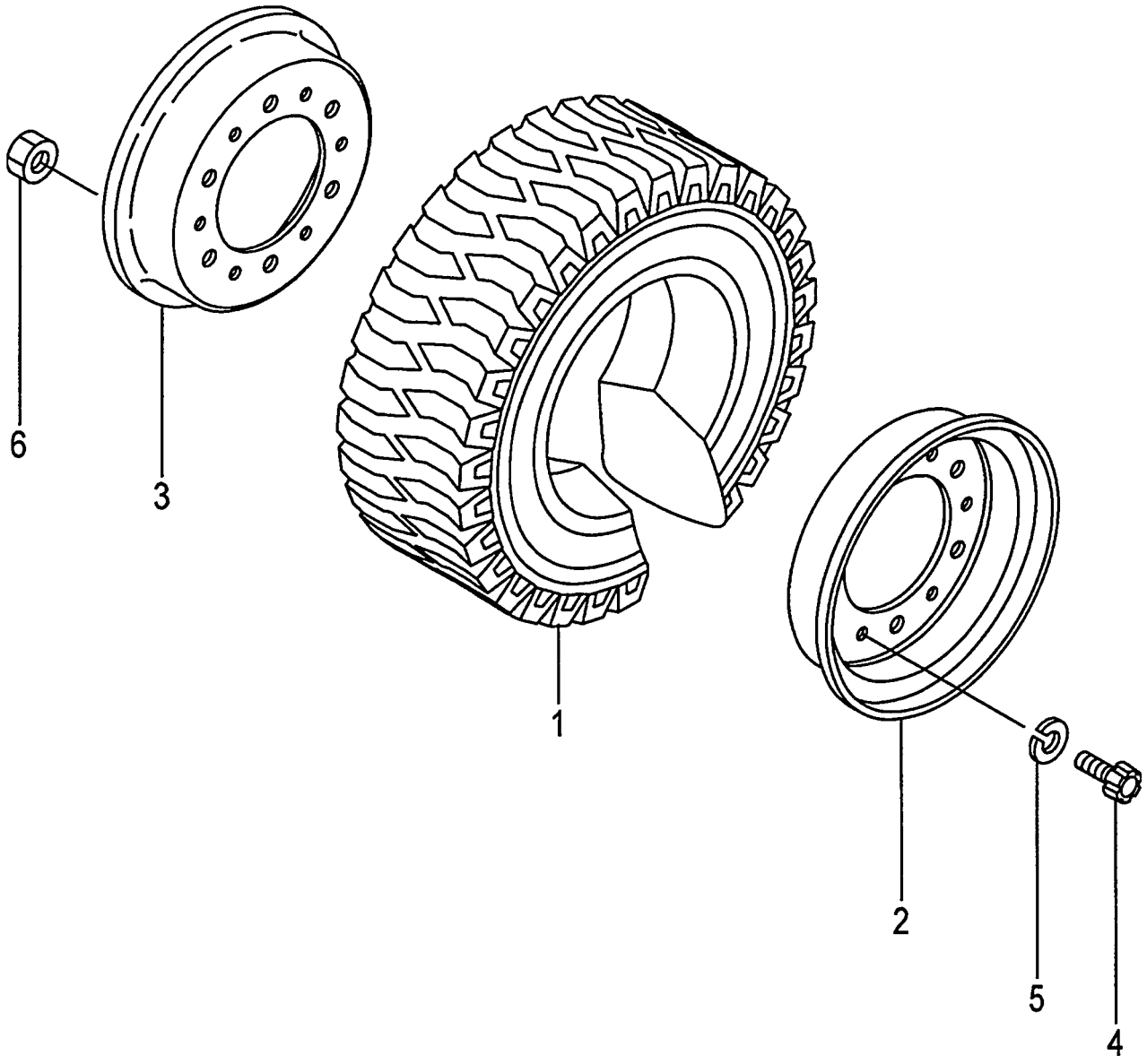

A:FD10C12 FD10T12 FD15C12 FD15T12

Item No	Part No.	Mark	Description		Req'd	Remarks : Serial No.
A1	51233-80401		WHEEL-ASSY,FRONT	ﾌﾛﾝﾄﾎｲｰﾙｱｯｾﾝ	2	[TUJF] INC.1-6
-	51236-80221		WHEEL-ASSY,FRONT	ﾌﾛﾝﾄﾎｲｰﾙｱｯｾﾝ	2	[TUSF] INC.1-6
-	51236-80201		WHEEL-ASSY,FRONT	ﾌﾛﾝﾄﾎｲｰﾙｱｯｾﾝ	2	[TUWF] INC.1-6
-	51236-80211		WHEEL-ASSY,FRONT	ﾌﾛﾝﾄﾎｲｰﾙｱｯｾﾝ	2	[TUGF] INC.1-6
1	06802-65010		TIRE,UNIQUE,650-10	ﾀｲﾔ	2	[TUJF](DUN)
-	06806-65010		TIRE,UNIQUE,650-10	ﾀｲﾔ	2	[TUJF](AIC)
-	06853-65010		TIRE,SOFTONE,650-10	ﾀｲﾔ	2	[TUSF]
-	06841-65010		TIRE,WHITE,650-10	ﾀｲﾔ	2	[TUWF]
-	06843-65010		TIRE,GREEN,650-10	ﾀｲﾔ	2	[TUGF]
A2	22574-40303		RIM-ASSY,500F-10	ﾘﾑｱｯｾﾝ	2	[TUJF][TUSF][TUWF][TUGF] INC.2-6
2	NO PART NO.	#	RIM,OUTSIDE	ﾘﾑ	2	[TUJF][TUSF][TUWF][TUGF]
3	NO PART NO.	#	RIM,INSIDE	ﾘﾑ	2	[TUJF][TUSF][TUWF][TUGF]
4	510F3-82611		BOLT	ﾎﾞﾙﾄ	12	[TUJF][TUSF][TUWF][TUGF]
5	02011-00012		WASHER	ﾜｯｼｬ	12	[TUJF][TUSF][TUWF][TUGF]
6	01402-10012		NUT	ﾅｯﾄ	12	[TUJF][TUSF][TUWF][TUGF]

FIG.74 FRONT WHEEL (1.8T):[TUJF][TUSF][TUWF][TUGF]

(F6014490) フロントホイール

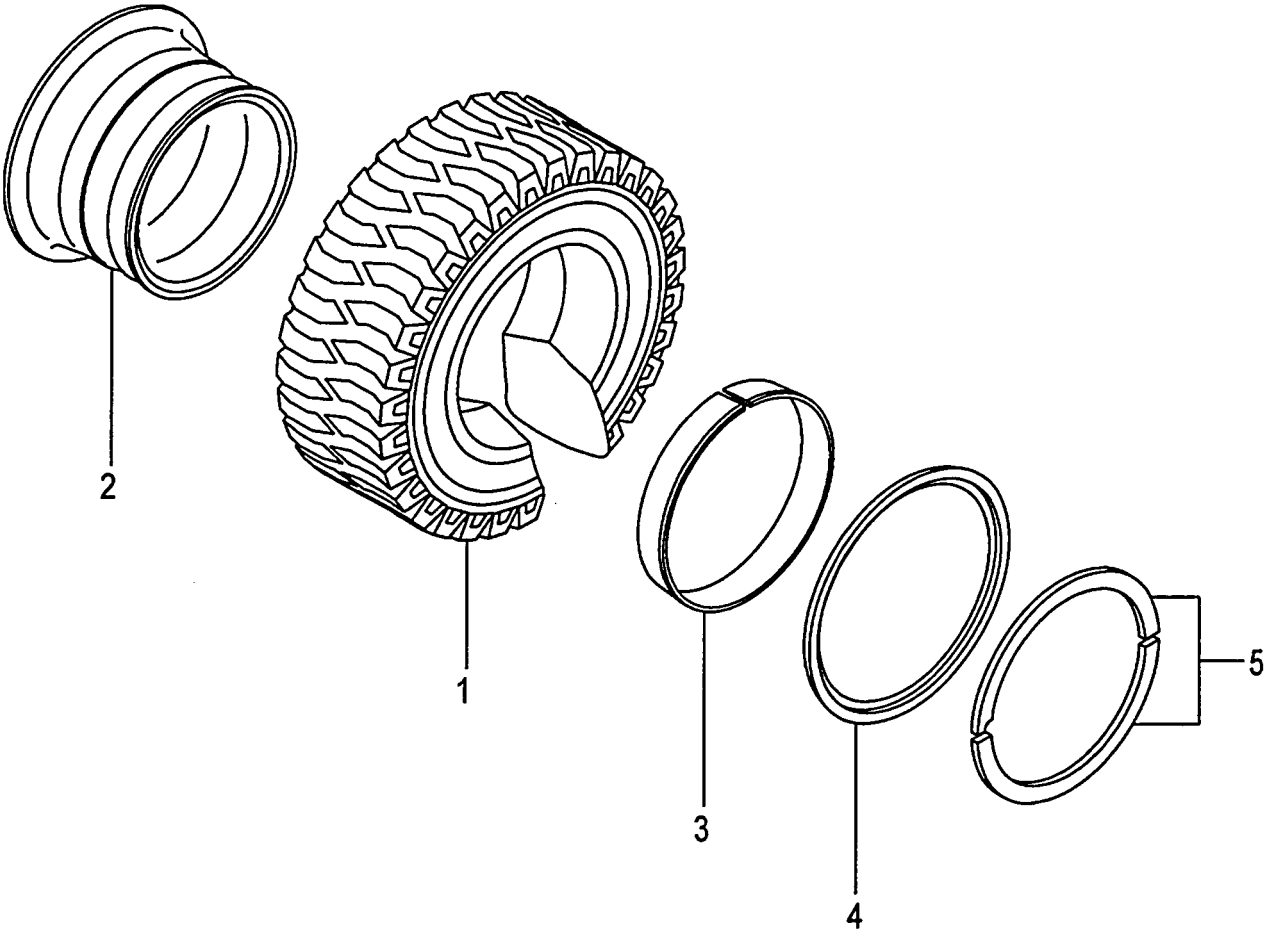

A:FD18C12 FD18T12

Item No	Part No.	Mark	Description		Req'd	Remarks : Serial No.
A1	54276-80201		WHEEL-ASSY,FRONT	ﾌﾛﾝﾄﾎｲｰﾙｱｯｾﾝ	2	[TUJF] INC.1-5
-	51276-80221		WHEEL-ASSY,FRONT	ﾌﾛﾝﾄﾎｲｰﾙｱｯｾﾝ	2	[TUSF] INC.1-5
-	51276-80201		WHEEL-ASSY,FRONT	ﾌﾛﾝﾄﾎｲｰﾙｱｯｾﾝ	2	[TUWF] INC.1-5
-	51276-80211		WHEEL-ASSY,FRONT	ﾌﾛﾝﾄﾎｲｰﾙｱｯｾﾝ	2	[TUGF] INC.1-5
1	06806-65010		TIRE,UNIQUE,650-10	ﾀｲﾔ	2	[TUJF](AIC)
-	06805-65010		TIRE,UNIQUE,650-10	ﾀｲﾔ	2	[TUJF](DUN)
-	06853-65010		TIRE,SOFTONE,650-10	ﾀｲﾔ	2	[TUSF]
-	06841-65010		TIRE,WHITE,650-10	ﾀｲﾔ	2	[TUWF]
-	06843-65010		TIRE,GREEN,650-10	ﾀｲﾔ	2	[TUGF]
A2	24274-40501		RIM-ASSY,500F-10	ﾘﾑｱｯｾﾝ	2	[TUJF][TUSF][TUWF][TUGF] INC.2-5
2	NO PART NO.	#	RIM	ﾘﾑ	2	[TUJF][TUSF][TUWF][TUGF]
3	54236-83011		BAND	ﾊﾞﾝﾄﾞ	2	[TUJF][TUSF][TUWF][TUGF]
4	54236-83021		FLANGE,SIDE	ﾌﾗﾝｼﾞ	2	[TUJF][TUSF][TUWF][TUGF]
5	54236-83031		RING,LOCK	ﾘﾝｸﾞ	2	[TUJF][TUSF][TUWF][TUGF]

FIG.75 FRONT WHEEL (1.0T,1.5T):[TUJF/DR F]

(F60144A0) フロントホイール

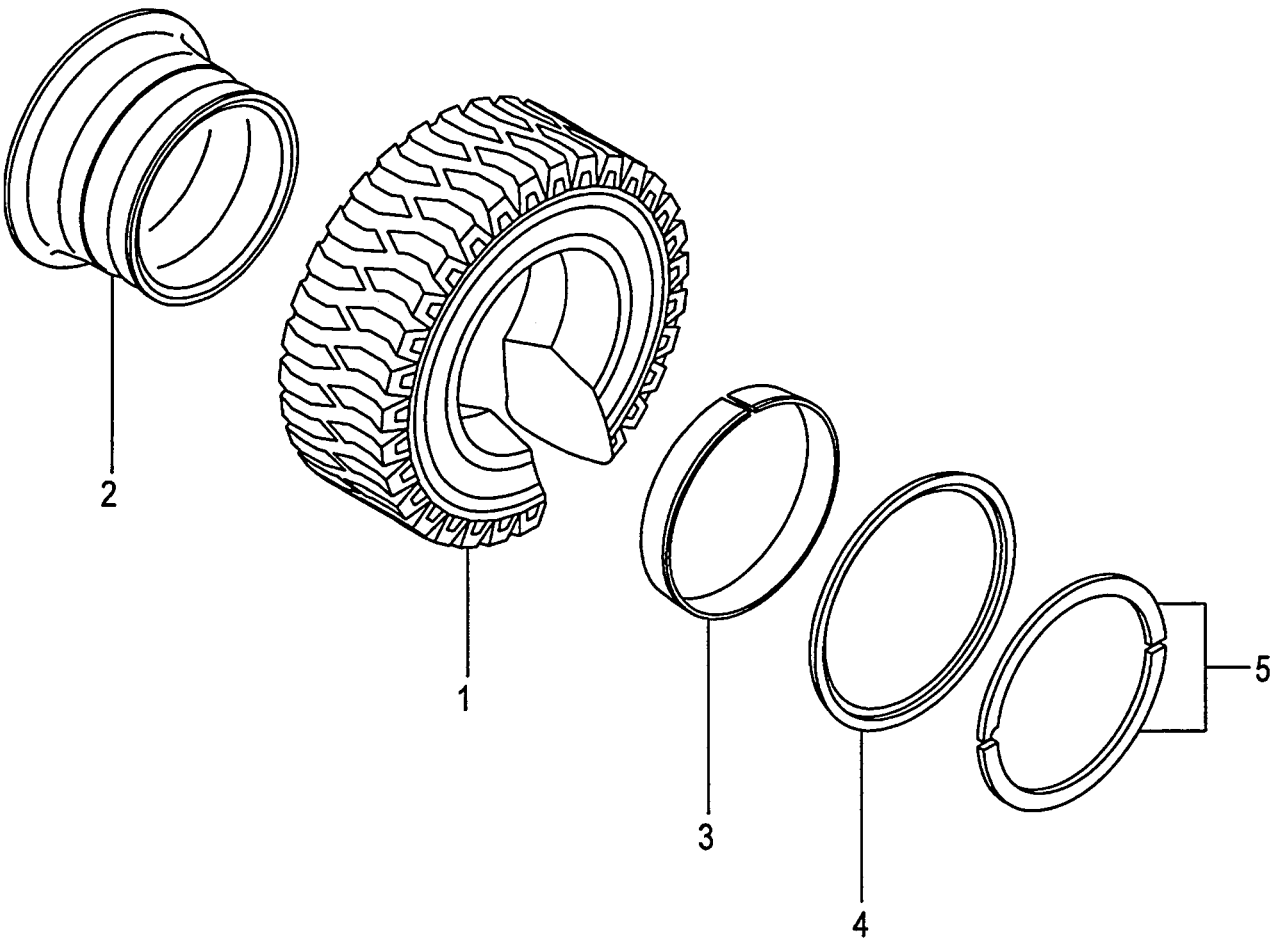

A:FD10C12 FD10T12 FD15C12 FD15T12

Item No	Part No.	Mark	Description		Req'd	Remarks : Serial No.
A1	54236-80121		WHEEL-ASSY,FRONT	ﾌﾛﾝﾄﾎｲｰﾙｱｯｾﾝ	2	[TUJF/DR F] INC.1-5
1	06806-65010		TIRE,UNIQUE,650-10	ﾀｲﾔ	2	[TUJF/DR F]
A2	54236-80181		RIM-ASSY,500F-10	ﾘﾑｱｯｾﾝ	2	[TUJF/DR F] INC.2-5
2	NO PART NO.	#	RIM	ﾘﾑ	2	[TUJF/DR F]
3	54236-83011		BAND	ﾊﾞﾝﾄﾞ	2	[TUJF/DR F]
4	54236-83021		FLANGE,SIDE	ﾌﾗﾝｼﾞ	2	[TUJF/DR F]
5	54236-83031		RING,LOCK	ﾘﾝｸﾞ	2	[TUJF/DR F]

FIG.76 FRONT WHEEL (1.0T,1.5T):[TRAF]

(F60144B0) フロントホイール

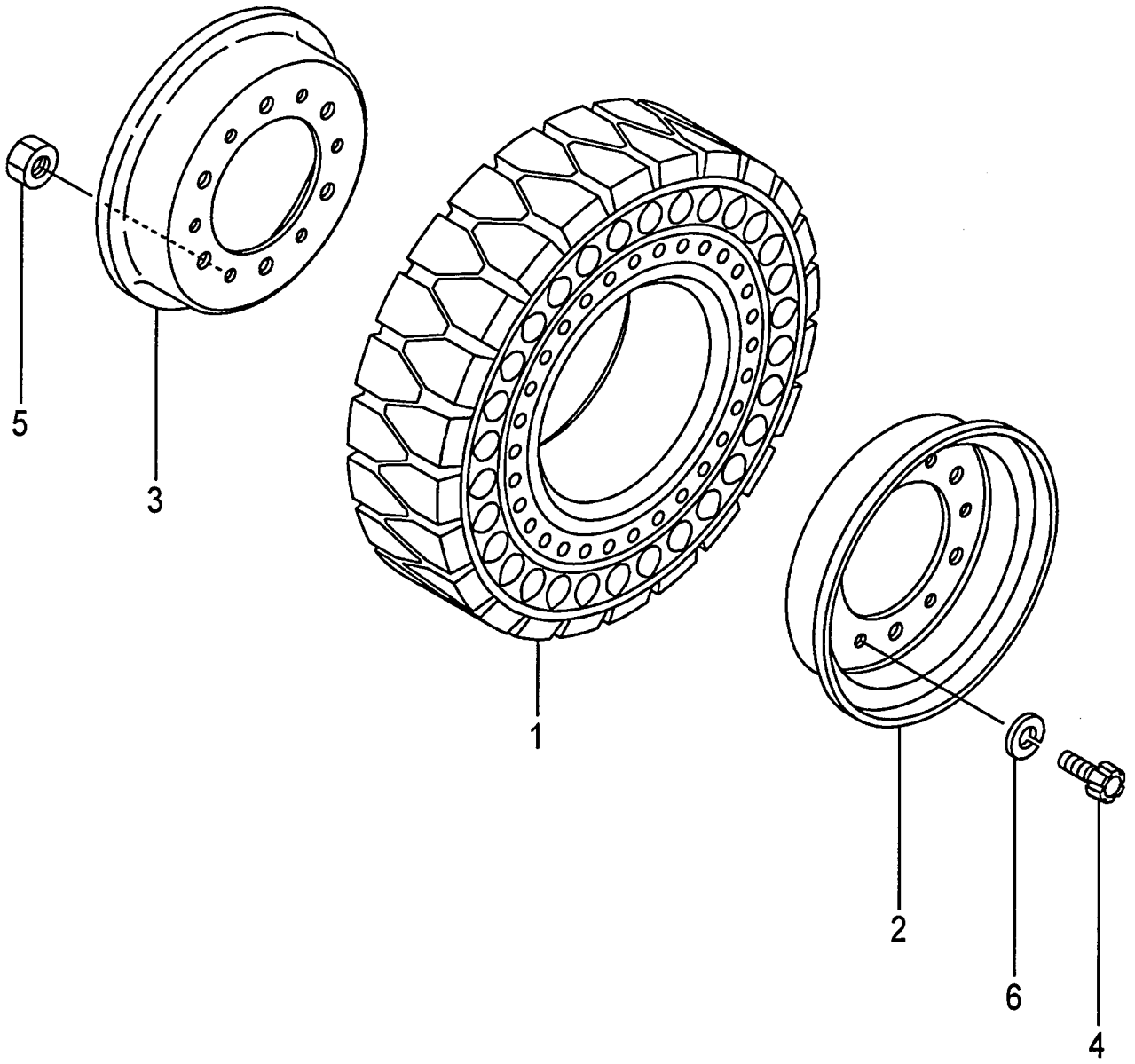

A:FD10C12 FD10T12 FD15C12 FD15T12

Item No	Part No.	Mark	Description		Req'd	Remarks : Serial No.
A1	516G6-80171		WHEEL-ASSY,FRONT	ﾌﾛﾝﾄﾎｲｰﾙｱｯｾﾝ	2	[TRAF] INC.1-6
1	516G6-85011		TIRE,AIR-BOSS,650-10	ﾀｲﾔ	2	[TRAF]
A2	22574-40303		RIM-ASSY,500F-10	ﾘﾑｱｯｾﾝ	2	[TRAF] INC.2-6
2	NO PART NO.	#	RIM,OUTSIDE	ﾘﾑ	2	[TRAF]
3	NO PART NO.	#	RIM,INSIDE	ﾘﾑ	2	[TRAF]
4	510F3-82611		BOLT	ﾎﾞﾙﾄ	12	[TRAF]
5	01402-10012		NUT	ﾅｯﾄ	12	[TRAF]
6	02011-00012		WASHER	ﾜｯｼｬ	12	[TRAF]

FIG.77 FRONT WHEEL (1.8T):[TRAF]

(F60144C0) フロントホイール

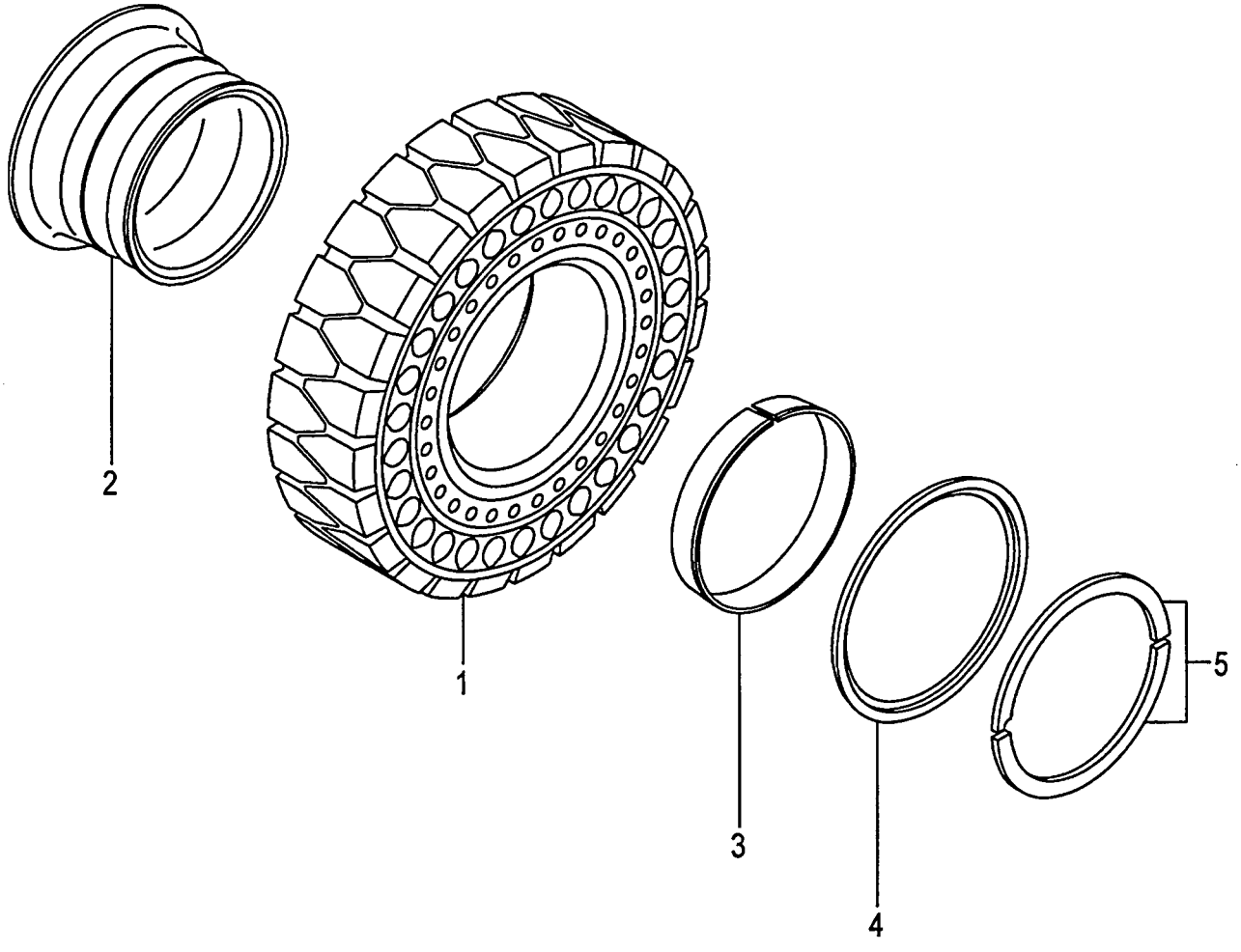

A:FD18C12 FD18T12

Item No	Part No.	Mark	Description		Req'd	Remarks : Serial No.
A1	516K6-80171		WHEEL-ASSY,FRONT	ﾌﾛﾝﾄﾎｲｰﾙｱｯｾﾝ	2	[TRAF] INC.1-5
1	516G6-85011		TIRE,AIR-BOSS,650-10	ﾀｲﾔ	2	[TRAF]
A2	24274-40501		RIM-ASSY,500F-10	ﾘﾑｱｯｾﾝ	2	[TRAF] INC.2-5
2	NO PART NO.	#	RIM	ﾘﾑ	2	[TRAF]
3	54236-83011		BAND	ﾊﾞﾝﾄﾞ	2	[TRAF]
4	54236-83021		FLANGE,SIDE	ﾌﾗﾝｼﾞ	2	[TRAF]
5	54236-83031		RING,LOCK	ﾘﾝｸﾞ	2	[TRAF]

FIG.78 FRONT WHEEL [TJ W][T W][TS W]

(F60144D0) フロントホイール

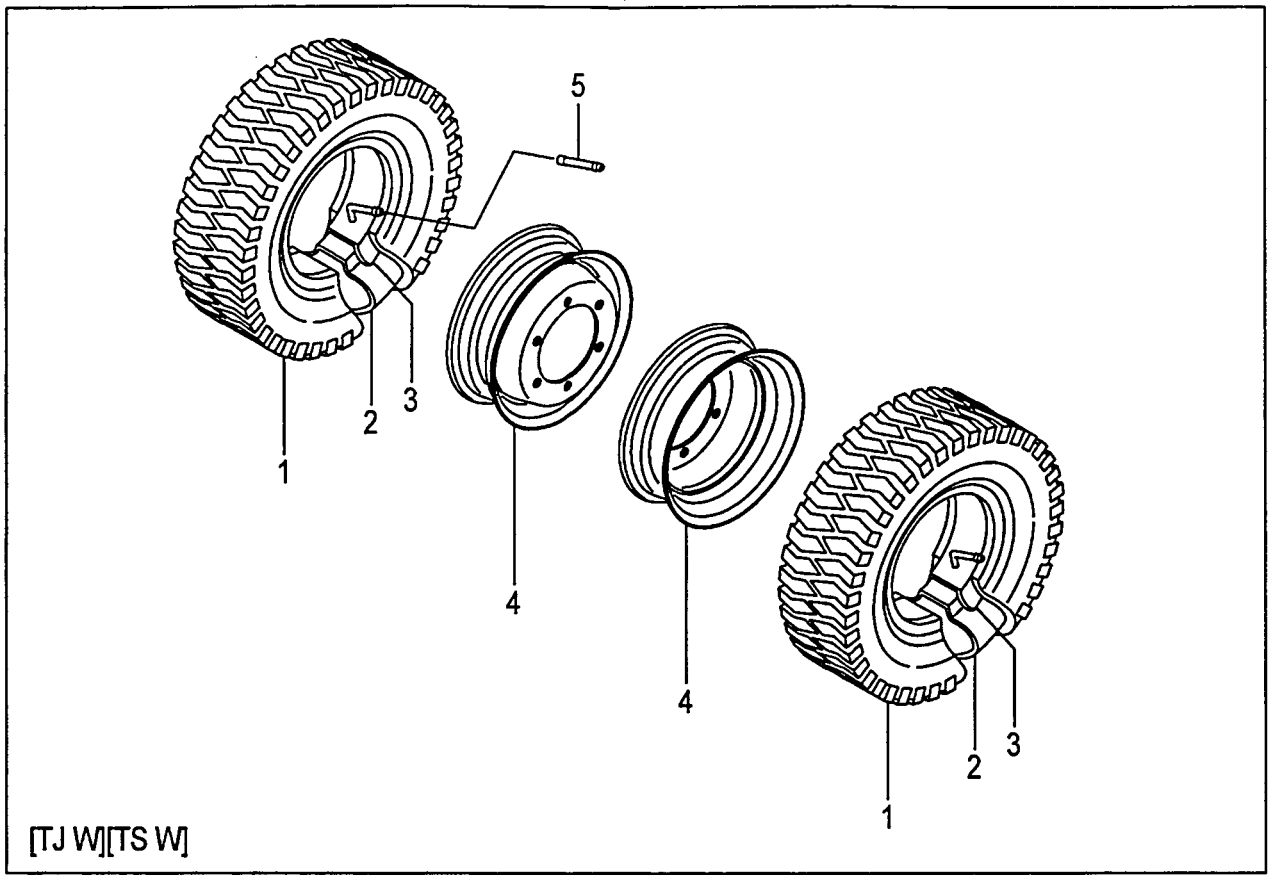

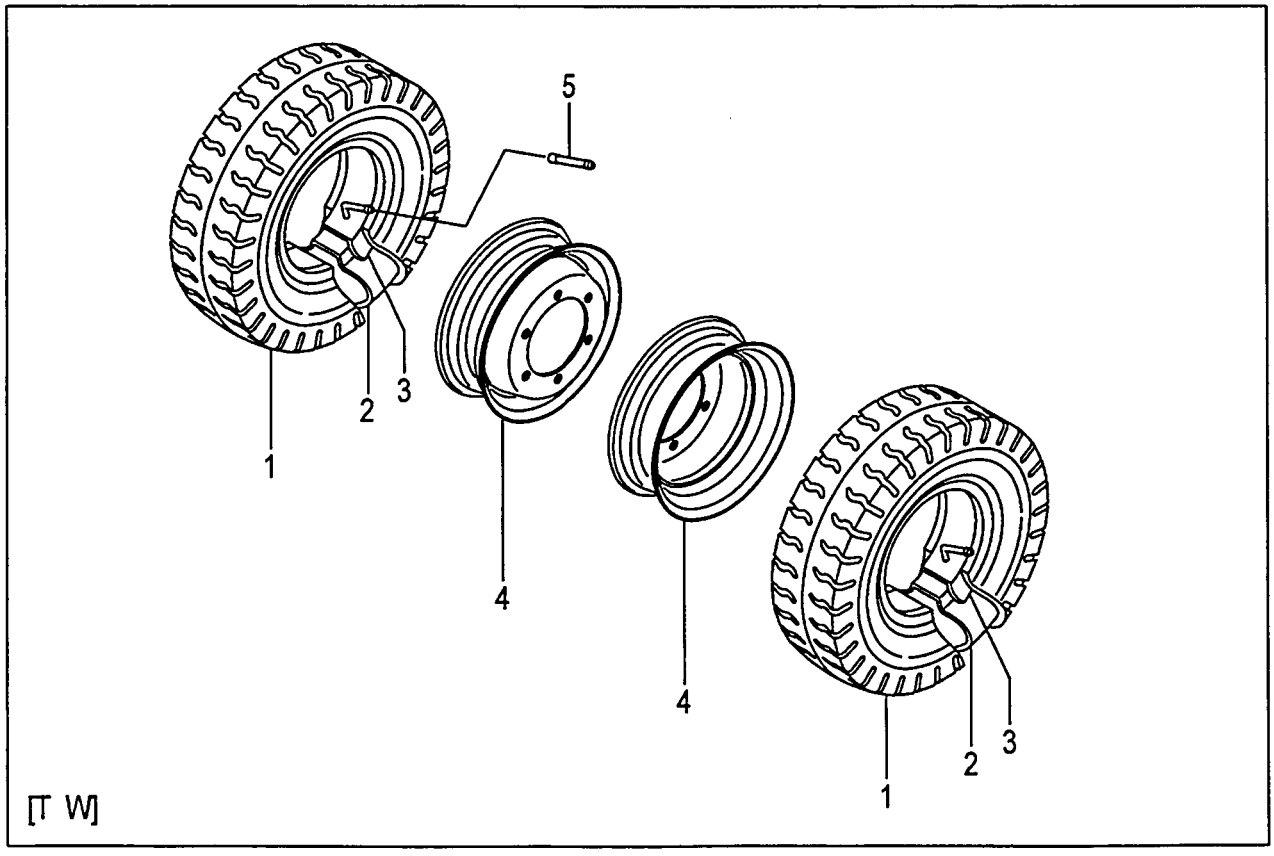

A:FD10C12 FD10T12
B:FD15C12 FD15T12
C:FD18C12 FD18T12

FIG.78
(F60144D0)

Item No	Part No.	Mark	Description		Req'd	Remarks : Serial No.
A1	54236-80251		WHEEL-ASSY,FRONT	ﾌﾛﾝﾄﾎｲｰﾙｱｯｾﾝ	4	[TJ W] INC.1-4
-	52197-40002		WHEEL-ASSY,FRONT	ﾌﾛﾝﾄﾎｲｰﾙｱｯｾﾝ	4	[T W] INC.1-4
-	518G7-40701		WHEEL-ASSY,FRONT	ﾌﾛﾝﾄﾎｲｰﾙｱｯｾﾝ	4	[TS W] INC.1-4
1	06002-45012		TIRE,450-12-8	ﾀｲﾔ	4	[TJ W]
-	06001-45012		TIRE,450-12-8	ﾀｲﾔ	4	[T W]
-	06007-45012		TIRE,450-12-8	ﾀｲﾔ	4	[TS W]
2	06711-45012		TUBE,450-12-8T	ﾁｭｰﾌﾞ	4	[TJ W][T W][TS W]
3	06701-45012		FLAP,450-12-8F	ﾌﾗｯﾌﾟ	4	[TJ W][T W][TS W]
4	52197-42001		RIM,350D-12	ﾘﾑ	4	[TJ W][T W][TS W]
5	06731-00070		VALVE,EXTENSION	ﾊﾞﾙﾌﾞ	2	[TJ W][T W][TS W]

FIG.79 FRONT WHEEL [TUJW][TUSW][TUWW][TUGW]

(F60144E0) フロントホイール

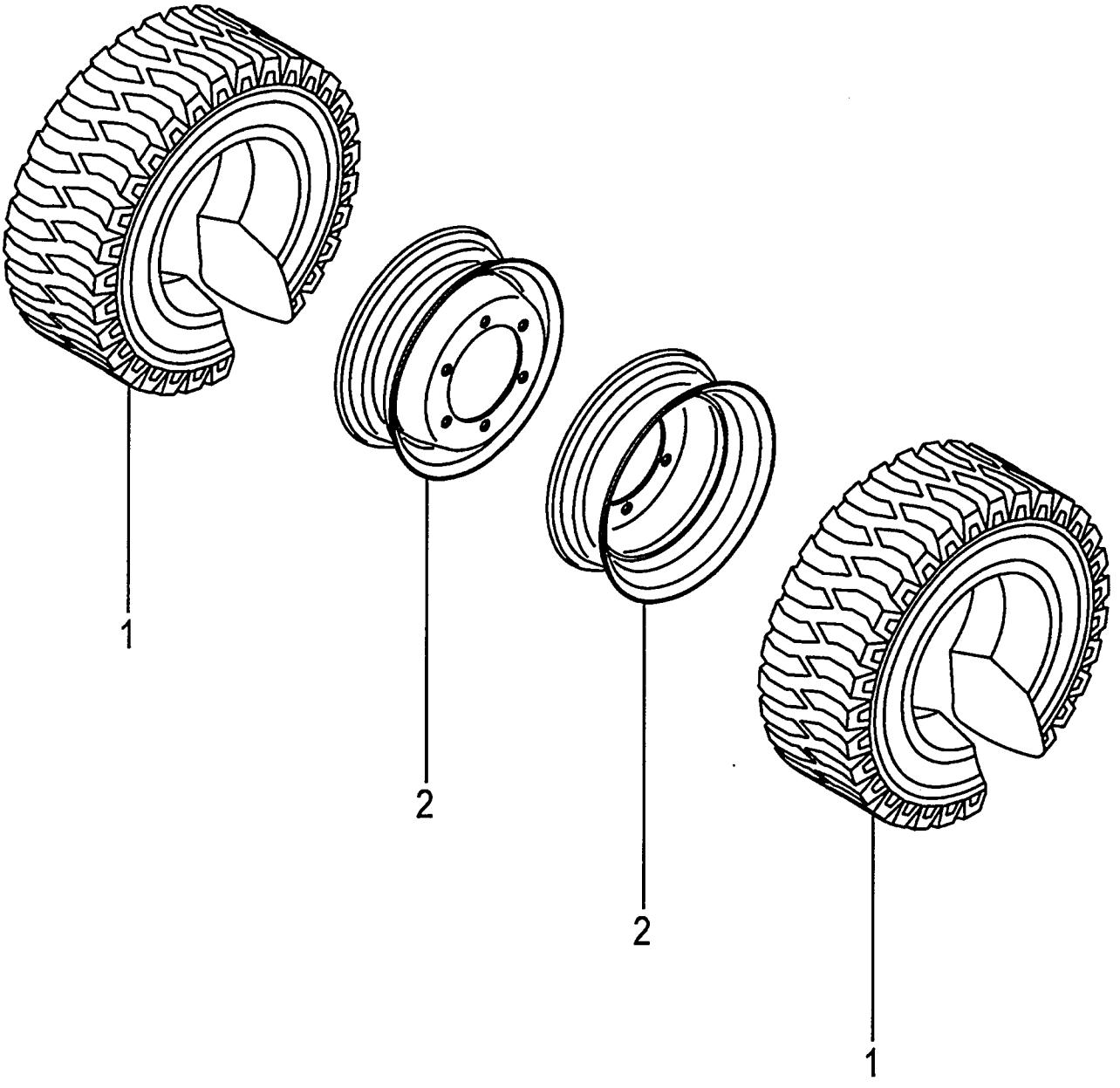

A:FD10C12 FD10T12 FD15C12 FD15T12 FD18C12 FD18T12

Item No	Part No.	Mark	Description		Req'd	Remarks : Serial No.
A1	54236-80201		WHEEL-ASSY,FRONT	フロントホイールアッセン	4	[TUJW] INC.1,2
-	51236-80321		WHEEL-ASSY,FRONT	フロントホイールアッセン	4	[TUSW] INC.1,2
-	51236-80301		WHEEL-ASSY,FRONT	フロントホイールアッセン	4	[TUWW] INC.1,2
-	51236-80311		WHEEL-ASSY,FRONT	フロントホイールアッセン	4	[TUGW] INC.1,2
1	06806-45012		TIRE,UNIQUE,450-12	タイヤ	4	[TUJW]
-	06851-45012		TIRE,SOFTONE,450-12	タイヤ	4	[TUSW]
-	06841-45012		TIRE,WHITE,450-12	タイヤ	4	[TUWW]
-	06843-45012		TIRE,GREEN,450-12	タイヤ	4	[TUGW]
2	52577-52001		RIM,300D-12	リム	4	[TUJW][TUSW][TUWW][TUGW]

FIG.80 FRONT WHEEL [TJ W65][TJSW65][T W65][TS W65]

(F60144F0) フロントホイール

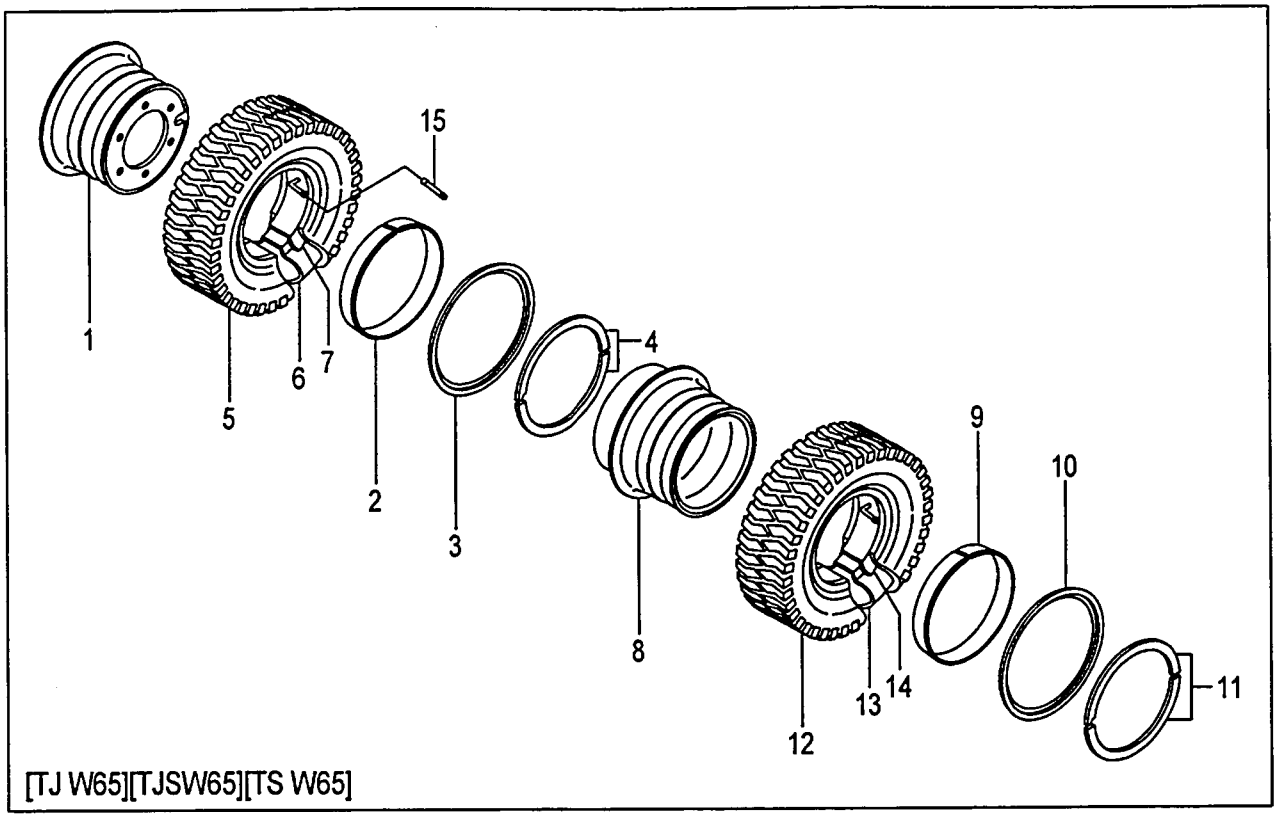

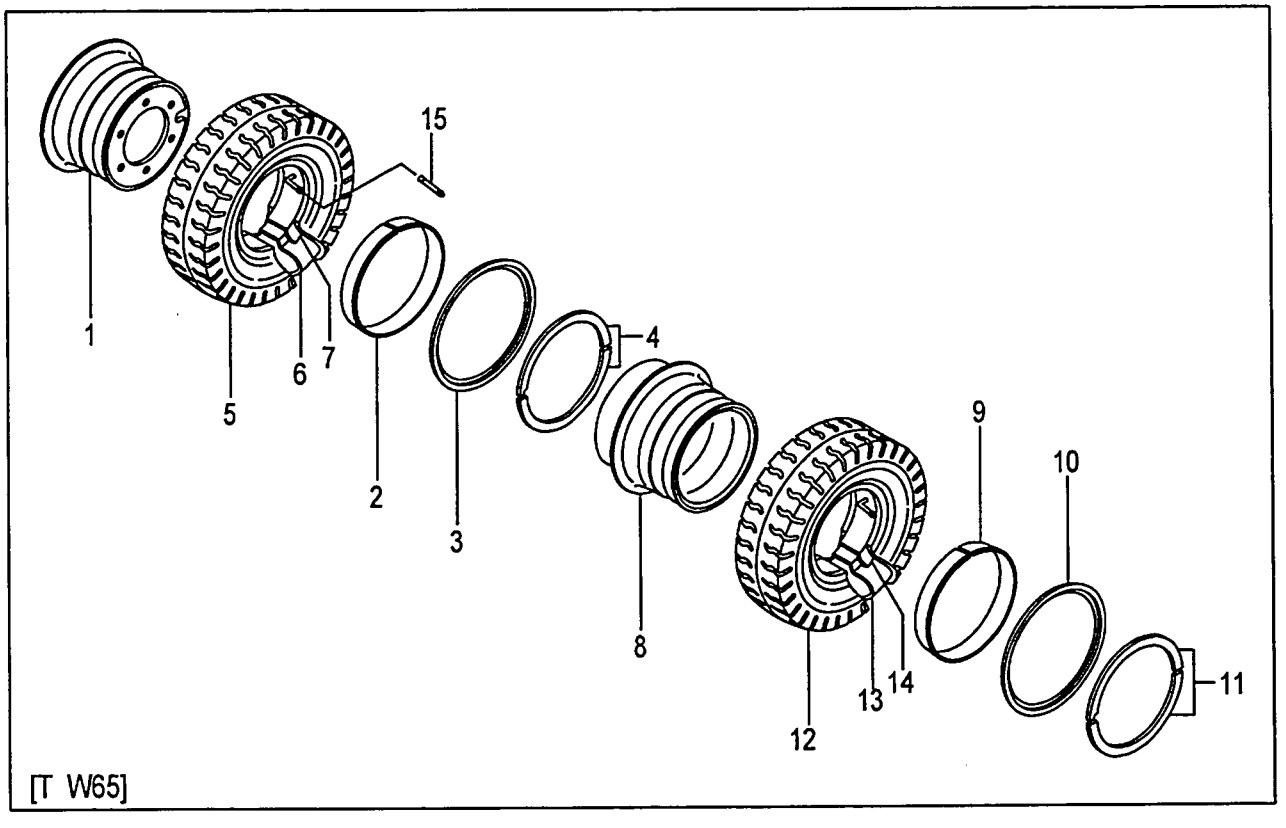

A:FD10C12 FD10T12 FD15C12 FD15T12 FD18C12 FD18T12

Item No	Part No.	Mark	Description		Req'd	Remarks : Serial No.
A1	54236-80701		WHEEL-ASSY,FRONT	ﾌﾛﾝﾄﾎｲｰﾙｱｯｾﾝ	2	[TJ W65] INC.1-7
-	54236-80601		WHEEL-ASSY,FRONT	ﾌﾛﾝﾄﾎｲｰﾙｱｯｾﾝ	2	[TJSW65] INC.1-7
-	54236-80301		WHEEL-ASSY,FRONT	ﾌﾛﾝﾄﾎｲｰﾙｱｯｾﾝ	2	[T W65] INC.1-7
-	54236-80801		WHEEL-ASSY,FRONT	ﾌﾛﾝﾄﾎｲｰﾙｱｯｾﾝ	2	[TS W65] INC.1-7
A2	54236-81001		RIM-ASSY,500F-10	ﾘﾑｱｯｾﾝ	2	[TJ W65][TJSW65][T W65] [TS W65] INC.1-4
1	NO PART NO.	#	RIM	ﾘﾑ	2	[TJ W65][TJSW65][T W65] [TS W65]
2	54236-83011		BAND	ﾊﾞﾝﾄﾞ	2	[TJ W65][TJSW65][T W65] [TS W65]
3	54236-83021		FLANGE,SIDE	ﾌﾗﾝｼﾞ	2	[TJ W65][TJSW65][T W65] [TS W65]
4	54236-83031		RING,LOCK	ﾘﾝｸﾞ	2	[TJ W65][TJSW65][T W65] [TS W65]
5	06006-65010		TIRE,650-10-10	ﾀｲﾔ	2	[TJ W65]
-	06005-65010		TIRE,650-10-10	ﾀｲﾔ	2	[TJSW65]
-	06001-65010		TIRE,650-10-10	ﾀｲﾔ	2	[T W65]
-	06007-65010		TIRE,650-10-10	ﾀｲﾔ	2	[TS W65]
6	06711-65010		TUBE,650-10-10T	ﾁｭｰﾌﾞ	2	[TJ W65][TJSW65][T W65] [TS W65]
7	06701-65010		FLAP,650-10-10F	ﾌﾗｯﾌﾟ	2	[TJ W65][TJSW65][T W65] [TS W65]
A3	54236-80711		WHEEL-ASSY,FRONT	ﾌﾛﾝﾄﾎｲｰﾙｱｯｾﾝ	2	[TJ W65] INC.8-14
-	54236-80611		WHEEL-ASSY,FRONT	ﾌﾛﾝﾄﾎｲｰﾙｱｯｾﾝ	2	[TJSW65] INC.8-14
-	54236-80311		WHEEL-ASSY,FRONT	ﾌﾛﾝﾄﾎｲｰﾙｱｯｾﾝ	2	[T W65] INC.8-14
-	54236-80811		WHEEL-ASSY,FRONT	ﾌﾛﾝﾄﾎｲｰﾙｱｯｾﾝ	2	[TS W65] INC.8-14
A4	54236-81011		RIM-ASSY,500F-10	ﾘﾑｱｯｾﾝ	2	[TJ W65][TJSW65][T W65] [TS W65] INC.8-11
8	NO PART NO.	#	RIM	ﾘﾑ	2	[TJ W65][TJSW65][T W65] [TS W65]
9	54236-83011		BAND	ﾊﾞﾝﾄﾞ	2	[TJ W65][TJSW65][T W65] [TS W65]
10	54236-83021		FLANGE,SIDE	ﾌﾗﾝｼﾞ	2	[TJ W65][TJSW65][T W65] [TS W65]
11	54236-83031		RING,LOCK	ﾘﾝｸﾞ	2	[TJ W65][TJSW65][T W65] [TS W65]
12	06006-65010		TIRE,650-10-10	ﾀｲﾔ	2	[TJ W65]
-	06005-65010		TIRE,650-10-10	ﾀｲﾔ	2	[TJSW65]
-	06001-65010		TIRE,650-10-10	ﾀｲﾔ	2	[T W65]
-	06007-65010		TIRE,650-10-10	ﾀｲﾔ	2	[TS W65]
13	06711-65010		TUBE,650-10-10T	ﾁｭｰﾌﾞ	2	[TJ W65][TJSW65][T W65] [TS W65]
14	06701-65010		FLAP,650-10-10F	ﾌﾗｯﾌﾟ	2	[TJ W65][TJSW65][T W65] [TS W65]
15	06731-00120		TUBE,EXTENSION	ﾁｭｰﾌﾞ	2	[TJ W65][TJSW65][T W65] [TS W65]

FIG.81 FRONT WHEEL [TUJW65][TUSW65][TUWW65][TUGW65]

(F60144G0) フロントホイール

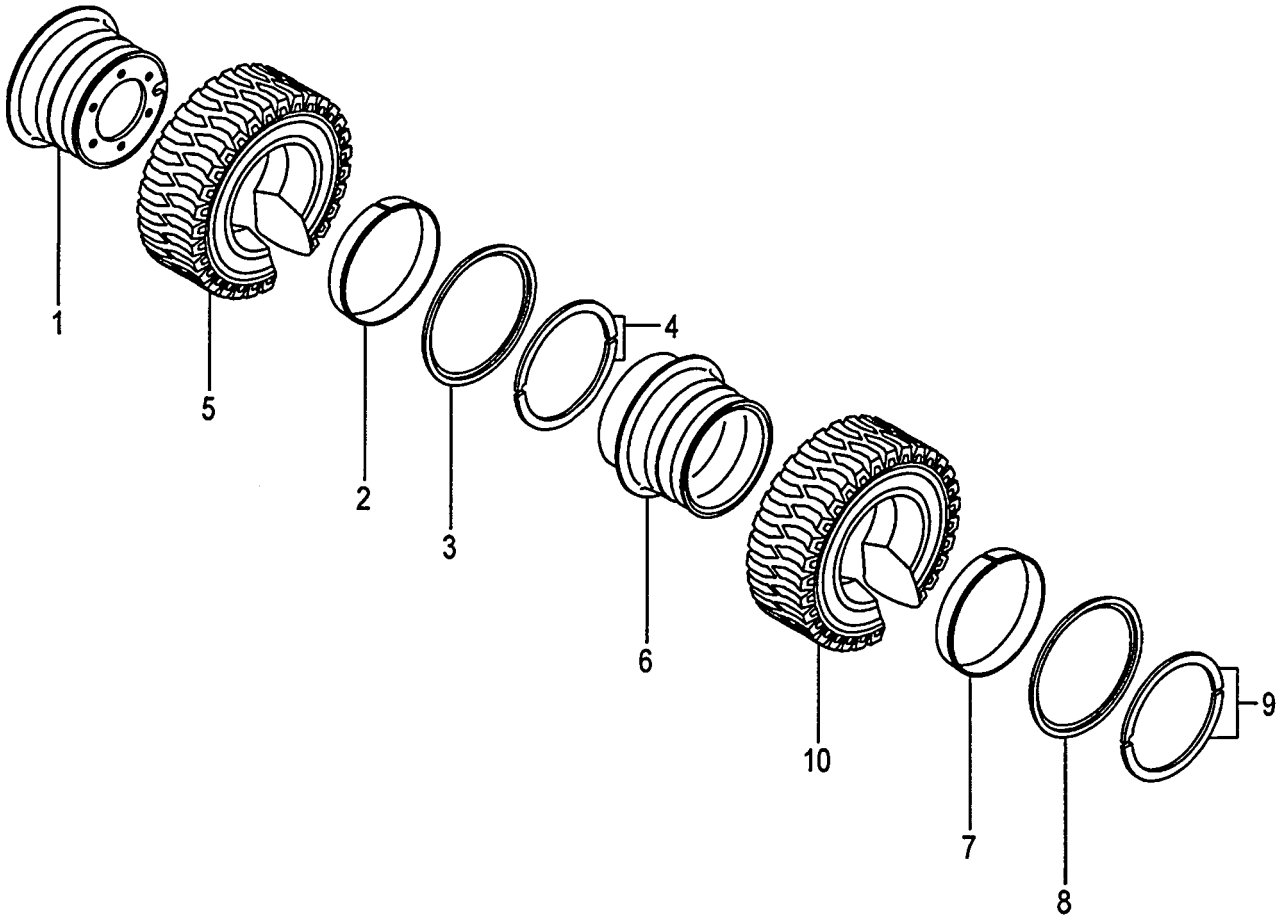

A:FD10C12 FD10T12 FD15C12 FD15T12 FD18C12 FD18T12

Item No	Part No.	Mark	Description		Req'd	Remarks : Serial No.
A1	54236-80501		WHEEL-ASSY,FRONT	ﾌﾛﾝﾄﾎｲｰﾙｱｯｾﾝ	2	[TUJW65] INC.1-5
-	51236-80441		WHEEL-ASSY,FRONT	ﾌﾛﾝﾄﾎｲｰﾙｱｯｾﾝ	2	[TUSW65] INC.1-5
-	51236-80401		WHEEL-ASSY,FRONT	ﾌﾛﾝﾄﾎｲｰﾙｱｯｾﾝ	2	[TUWW65] INC.1-5
-	51236-80421		WHEEL-ASSY,FRONT	ﾌﾛﾝﾄﾎｲｰﾙｱｯｾﾝ	2	[TUGW65] INC.1-5
A2	54236-81001		RIM-ASSY,500F-10	ﾘﾑｱｯｾﾝ	2	[TUJW65][TUSW65][TUWW65] [TUGW65] INC.1-4
1	NO PART NO.	#	RIM	ﾘﾑ	2	[TUJW65][TUSW65][TUWW65] [TUGW65]
2	54236-83011		BAND	ﾊﾞﾝﾄﾞ	2	[TUJW65][TUSW65][TUWW65] [TUGW65]
3	54236-83021		FLANGE,SIDE	ﾌﾗﾝｼﾞ	2	[TUJW65][TUSW65][TUWW65] [TUGW65]
4	54236-83031		RING,LOCK	ﾘﾝｸﾞ	2	[TUJW65][TUSW65][TUWW65] [TUGW65]
5	06805-65010		TIRE,UNIQUE,650-10	ﾀｲﾔ	2	[TUJW65](DUN)
-	06806-65010		TIRE,UNIQUE,650-10	ﾀｲﾔ	2	[TUJW65](AIC)
-	06853-65010		TIRE,SOFTONE,650-10	ﾀｲﾔ	2	[TUSW65]
-	06841-65010		TIRE,WHITE,650-10	ﾀｲﾔ	2	[TUWW65]
-	06843-65010		TIRE,GREEN,650-10	ﾀｲﾔ	2	[TUGW65]
A3	54236-80511		WHEEL-ASSY,FRONT	ﾌﾛﾝﾄﾎｲｰﾙｱｯｾﾝ	2	[TUJW65] INC.6-10
-	51236-80451		WHEEL-ASSY,FRONT	ﾌﾛﾝﾄﾎｲｰﾙｱｯｾﾝ	2	[TUSW65] INC.6-10
-	51236-80411		WHEEL-ASSY,FRONT	ﾌﾛﾝﾄﾎｲｰﾙｱｯｾﾝ	2	[TUWW65] INC.6-10
-	51236-80431		WHEEL-ASSY,FRONT	ﾌﾛﾝﾄﾎｲｰﾙｱｯｾﾝ	2	[TUGW65] INC.6-10
A4	54236-81011		RIM-ASSY,500F-10	ﾘﾑｱｯｾﾝ	2	[TUJW65][TUSW65][TUWW65] [TUGW65] INC.6-9
6	NO PART NO.	#	RIM	ﾘﾑ	2	[TUJW65][TUSW65][TUWW65] [TUGW65]
7	54236-83011		BAND	ﾊﾞﾝﾄﾞ	2	[TUJW65][TUSW65][TUWW65] [TUGW65]
8	54236-83021		FLANGE,SIDE	ﾌﾗﾝｼﾞ	2	[TUJW65][TUSW65][TUWW65] [TUGW65]
9	54236-83031		RING,LOCK	ﾘﾝｸﾞ	2	[TUJW65][TUSW65][TUWW65] [TUGW65]
10	06805-65010		TIRE,UNIQUE,650-10	ﾀｲﾔ	2	[TUJW65](DUN)
-	06806-65010		TIRE,UNIQUE,650-10	ﾀｲﾔ	2	[TUJW65](AIC)
-	06853-65010		TIRE,SOFTONE,650-10	ﾀｲﾔ	2	[TUSW65]
-	06841-65010		TIRE,WHITE,650-10	ﾀｲﾔ	2	[TUWW65]
-	06843-65010		TIRE,GREEN,650-10	ﾀｲﾔ	2	[TUGW65]

FIG.82 REAR WHEEL
(F60144H0) リヤーホイール

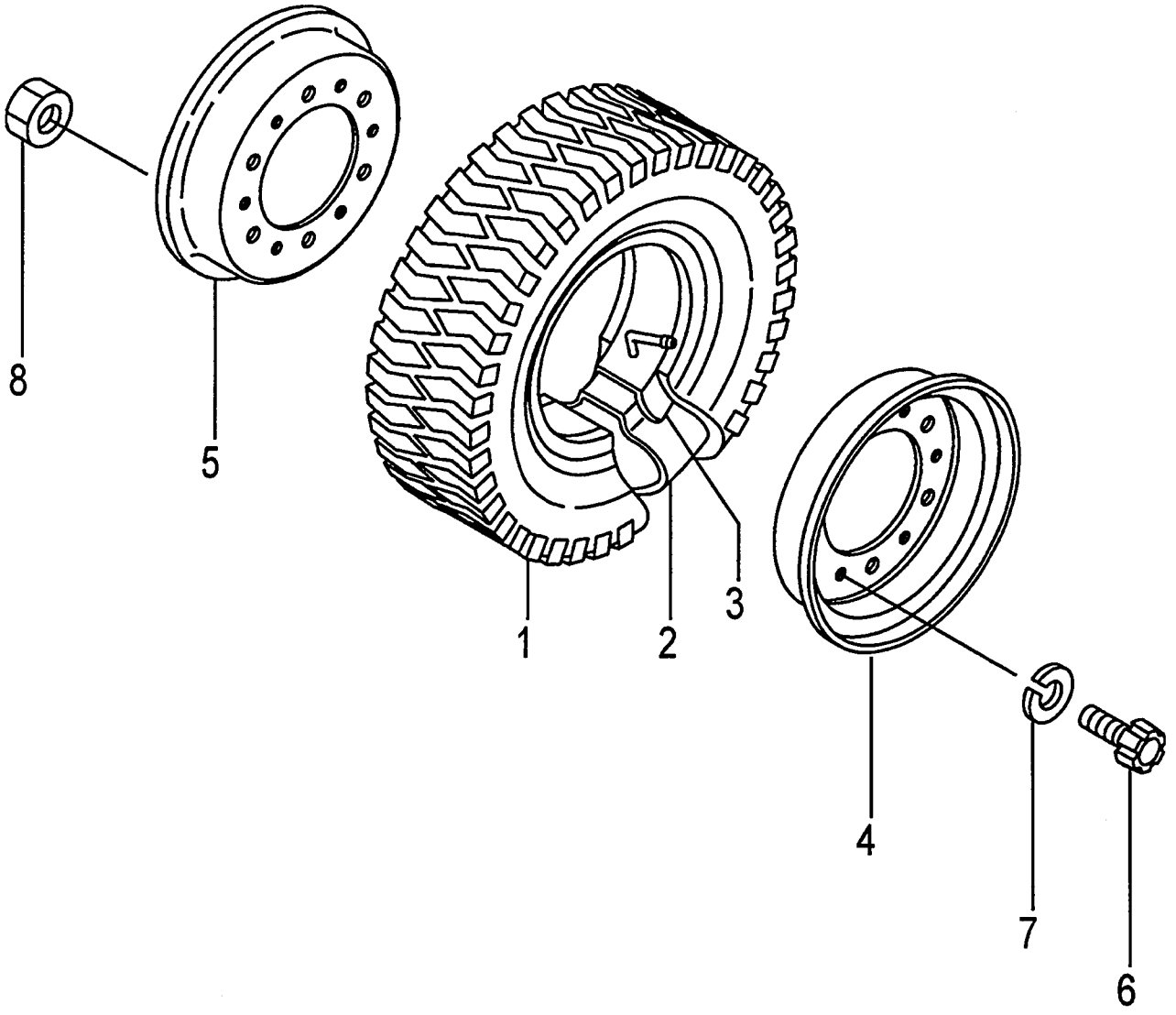

A:FD10C12 FD10T12
B:FD15C12 FD15T12
C:FD18C12 FD18T12

FIG.82
(F60144H0)

Item No	Part No.	Mark	Description		Req'd	Remarks : Serial No.
A1	54236-81201		WHEEL-ASSY,REAR	ﾘｱﾎｲｰﾙｱｯｾﾝ	2	INC.1-8
1	06006-50008		TIRE,500-8-8	ﾀｲﾔ	2	
2	06711-50008		TUBE,500-8-8T	ﾁｭｰﾌﾞ	2	
3	06701-50008		FLAP,500-8-8F	ﾌﾗｯﾌﾟ	2	
A2	52516-80302		RIM-ASSY,300D-8	ﾘﾑｱｯｾﾝ	2	INC.4-8
4	NO PART NO.	#	RIM,OUTSIDE	ﾘﾑ	2	
5	NO PART NO.	#	RIM,INSIDE	ﾘﾑ	2	
6	514A3-82611		BOLT	ﾎﾞﾙﾄ	12	
7	02011-00012		WASHER	ﾜｯｼｬ	12	
8	01400-10012		NUT	ﾅｯﾄ	12	

FIG.83 REAR WHEEL [DR R]

(F60144J0) リヤーホイール

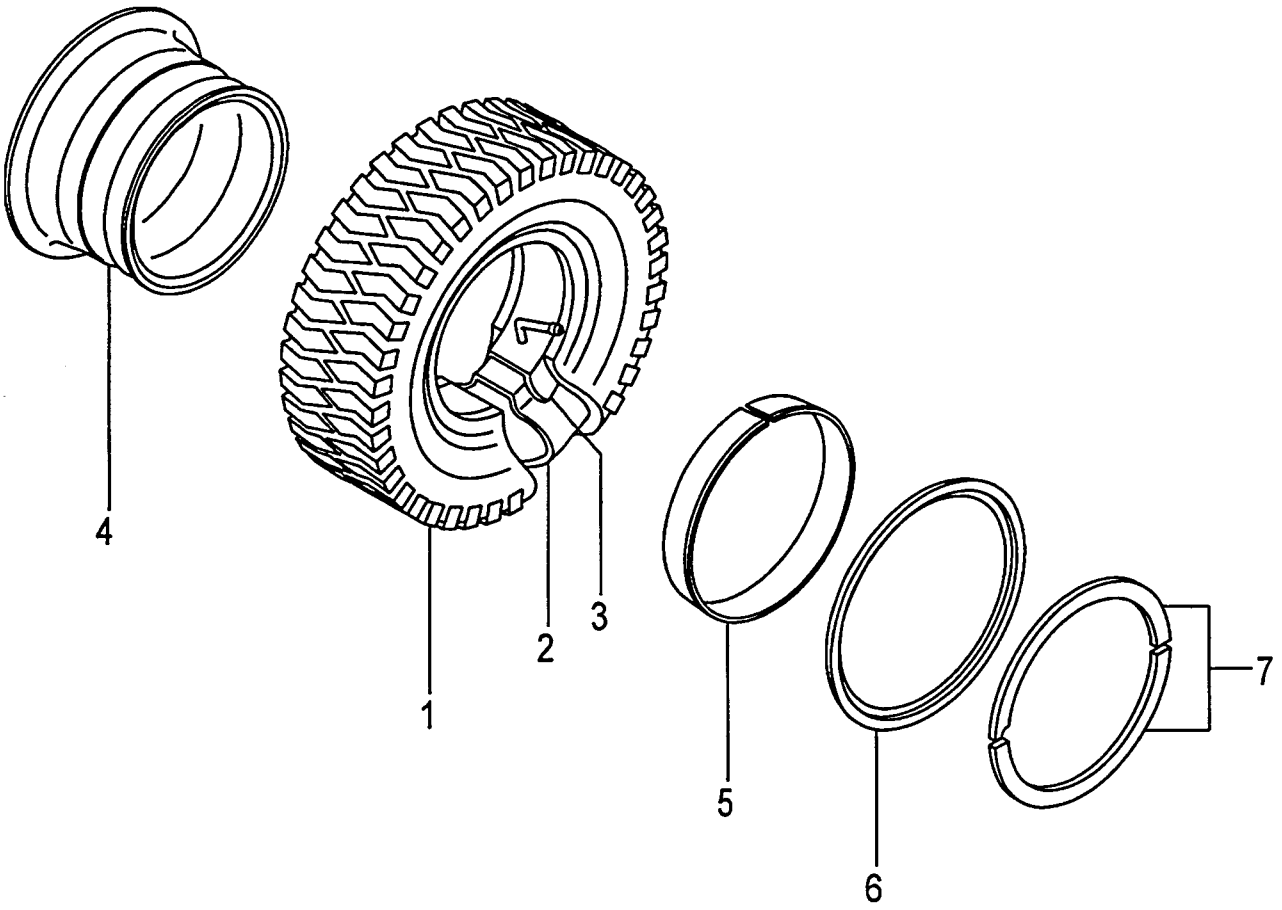

A:FD10C12 FD10T12
B:FD15C12 FD15T12
C:FD18C12 FD18T12

FIG.83
(F60144J0)

Item No	Part No.	Mark	Description		Req'd	Remarks : Serial No.
A1	54236-81541		WHEEL-ASSY,REAR	ﾘｱﾎｲｰﾙｱｯｾﾝ	2	[DR R] INC.1-7
1	06006-50008		TIRE,500-8-8	ﾀｲﾔ	2	[DR R]
2	06711-50008		TUBE,500-8-8T	ﾁｭｰﾌﾞ	2	[DR R]
3	06701-50008		FLAP,500-8-8F	ﾌﾗｯﾌﾟ	2	[DR R]
A2	54236-81601		RIM-ASSY,300D-8	ﾘﾑｱｯｾﾝ	2	[DR R] INC.4-7
4	NO PART NO.	#	RIM	ﾘﾑ	2	[DR R]
5	54236-83081		FLANGE,SIDE	ﾌﾗﾝｼﾞ	2	[DR R]
6	54236-83091		RING,LOCK	ﾘﾝｸﾞ	2	[DR R]
7	54236-83101		BAND	ﾊﾞﾝﾄﾞ	2	[DR R]

FIG.84 REAR WHEEL [TJ R][TJSR][T R][TS R]

(F60144K0) リヤーホイール

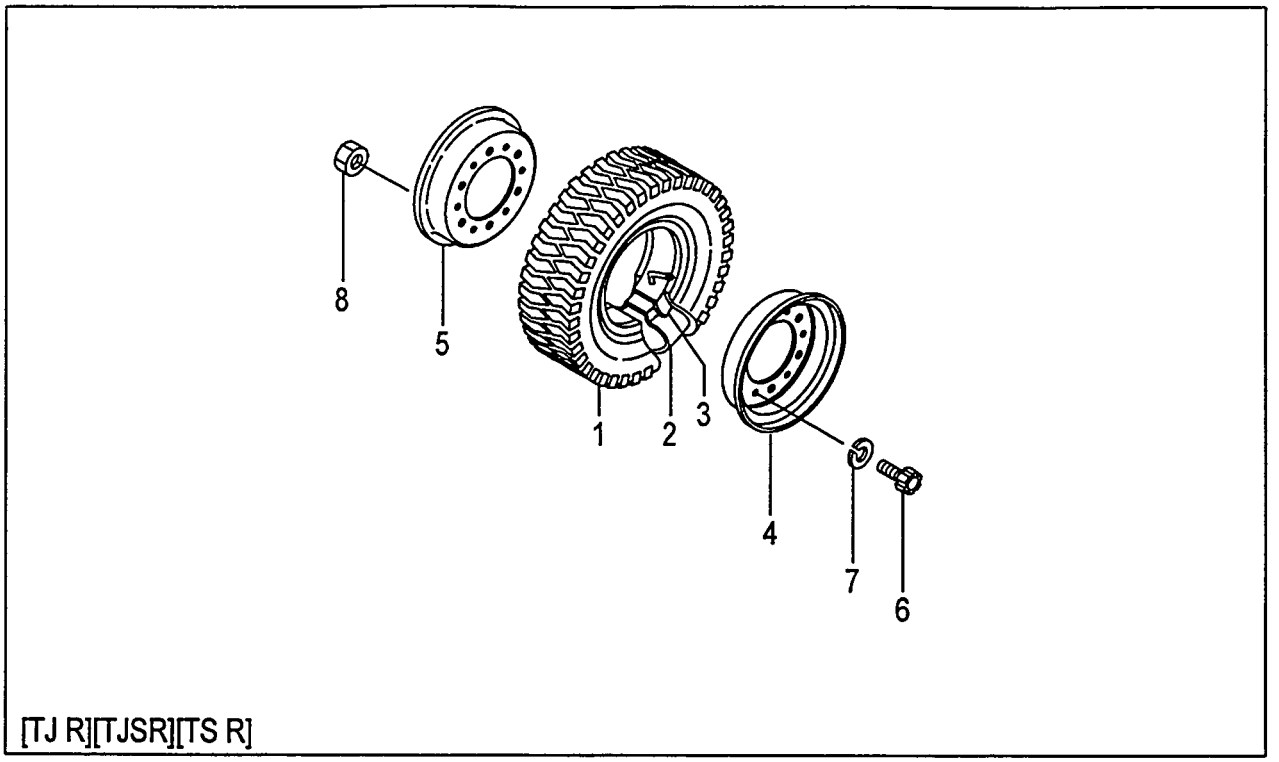

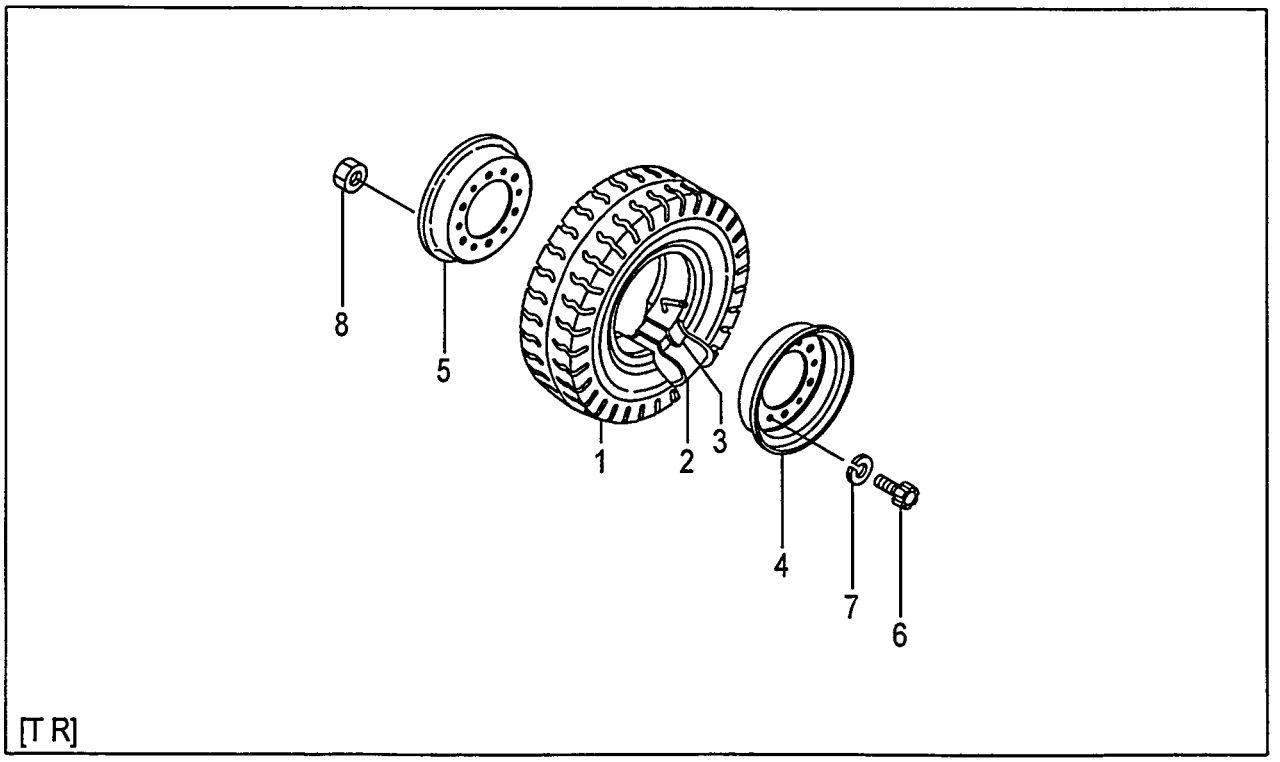

A:FD10C12 FD10T12
B:FD15C12 FD15T12
C:FD18C12 FD18T12

FIG.84
(F60144K0)

Item No	Part No.	Mark	Description		Req'd	Remarks : Serial No.
A1	54236-81201		WHEEL-ASSY,REAR	ﾘｱﾎｲｰﾙｱｯｾﾝ	2	[TJ R] INC.1-8
-	54236-81101		WHEEL-ASSY,REAR	ﾘｱﾎｲｰﾙｱｯｾﾝ	2	[TJSR] INC.1-8
-	24234-40201		WHEEL-ASSY,REAR	ﾘｱﾎｲｰﾙｱｯｾﾝ	2	[T R] INC.1-8
-	54236-81301		WHEEL-ASSY,REAR	ﾘｱﾎｲｰﾙｱｯｾﾝ	2	[TS R] INC.1-8
1	06006-50008		TIRE,500-8-8	ﾀｲﾔ	2	[TJ R]
-	06005-50008		TIRE,500-8-8	ﾀｲﾔ	2	[TJSR]
-	06001-50008		TIRE,500-8-8	ﾀｲﾔ	2	[T R]
-	06007-50008		TIRE,500-8-8	ﾀｲﾔ	2	[TS R]
2	06711-50008		TUBE,500-8-8T	ﾁｭｰﾌﾞ	2	[TJ R][TJSR][T R][TS R]
3	06701-50008		FLAP,500-8-8F	ﾌﾗｯﾌﾟ	2	[TJ R][TJSR][T R][TS R]
A2	52516-80302		RIM-ASSY,300D-8	ﾘﾑｱｯｾﾝ	2	[TJ R][TJSR][T R][TS R] INC.4-8
4	NO PART NO.	#	RIM,OUTSIDE	ﾘﾑ	2	[TJ R][TJSR][T R][TS R]
5	NO PART NO.	#	RIM,INSIDE	ﾘﾑ	2	[TJ R][TJSR][T R][TS R]
6	514A3-82611		BOLT	ﾎﾞﾙﾄ	12	[TJ R][TJSR][T R][TS R]
7	02011-00012		WASHER	ﾜｯｼｬ	12	[TJ R][TJSR][T R][TS R]
8	01400-10012		NUT	ﾅｯﾄ	12	[TJ R][TJSR][T R][TS R]

FIG.85 REAR WHEEL [(TJ R,TJSR,T R,TS R)/DR R]

(F60144L0) リヤーホイール

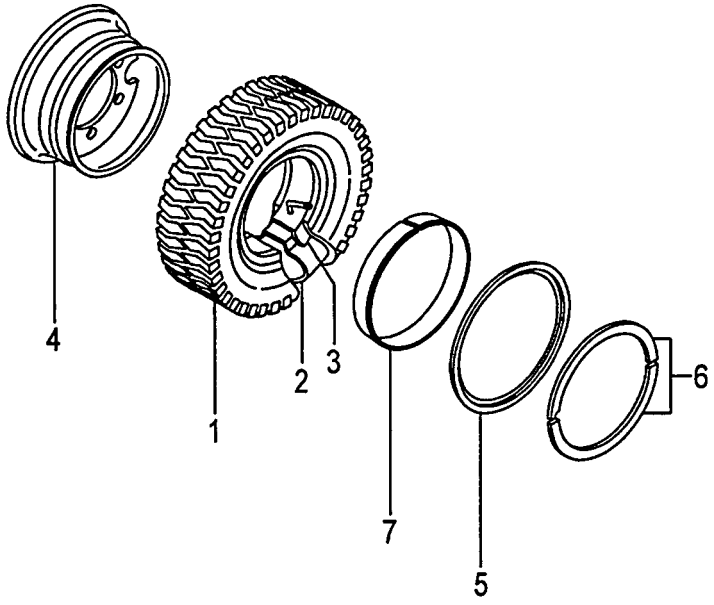

[TJ R/DR R][TJSR/DR R][TS R/DR R]

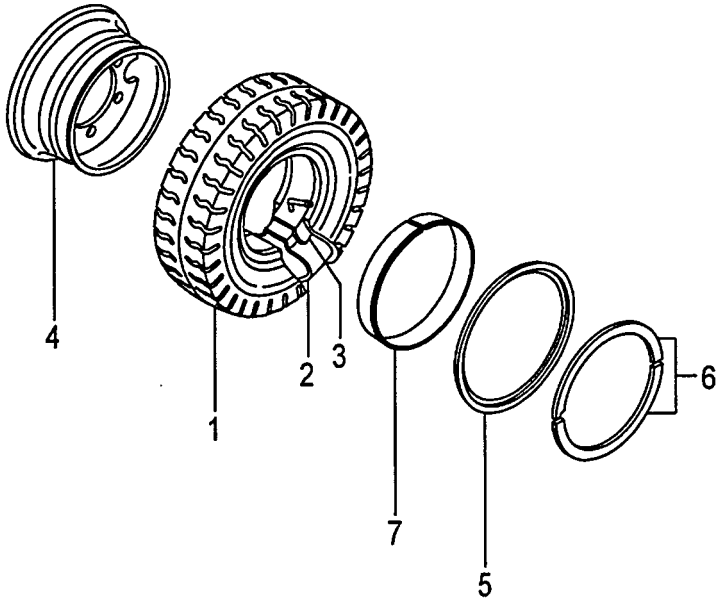

[T R/DR R]

A:FD10C12 FD10T12
B:FD15C12 FD15T12
C:FD18C12 FD18T12

FIG.85
(F60144L0)

Item No	Part No.	Mark	Description		Req'd	Remarks : Serial No.
A1	54236-81541		WHEEL-ASSY,REAR	ﾘｱﾎｲｰﾙｱｯｾﾝ	2	[TJ R/DR R] INC.1-7
-	54236-81531		WHEEL-ASSY,REAR	ﾘｱﾎｲｰﾙｱｯｾﾝ	2	[TJSR/DR R] INC.1-7
-	54236-81501		WHEEL-ASSY,REAR	ﾘｱﾎｲｰﾙｱｯｾﾝ	2	[T R/DR R] INC.1-7
-	54236-81551		WHEEL-ASSY,REAR	ﾘｱﾎｲｰﾙｱｯｾﾝ	2	[TS R/DR R] INC.1-7
1	06006-50008		TIRE,500-8-8	ﾀｲﾔ	2	[TJ R/DR R]
-	06005-50008		TIRE,500-8-8	ﾀｲﾔ	2	[TJSR/DR R]
-	06001-50008		TIRE,500-8-8	ﾀｲﾔ	2	[T R/DR R]
-	06007-50008		TIRE,500-8-8	ﾀｲﾔ	2	[TS R/DR R]
2	06711-50008		TUBE,500-8-8T	ﾁｭｰﾌﾞ	2	[TJ R/DR R][TJSR/DR R]
						[T R/DR R][TS R/DR R]
3	06701-50008		FLAP,500-8-8F	ﾌﾗｯﾌﾟ	2	[TJ R/DR R][TJSR/DR R]
						[T R/DR R][TS R/DR R]
A2	54236-81601		RIM-ASSY,300D-8	ﾘﾑｱｯｾﾝ	2	[TJ R/DR R][TJSR/DR R] INC.4-7
-	54236-81601		RIM-ASSY,300D-8	ﾘﾑｱｯｾﾝ	2	[T R/DR R][TS R/DR R] INC.4-7
4	NO PART NO.	#	RIM	ﾘﾑ	2	[TJ R/DR R][TJSR/DR R]
						[T R/DR R][TS R/DR R]
5	54236-83081		FLANGE,SIDE	ﾌﾗﾝｼﾞ	2	[TJ R/DR R][TJSR/DR R]
						[T R/DR R][TS R/DR R]
6	54236-83091		RING,LOCK	ﾘﾝｸﾞ	2	[TJ R/DR R][TJSR/DR R]
						[T R/DR R][TS R/DR R]
7	54236-83101		BAND	ﾊﾞﾝﾄﾞ	2	[TJ R/DR R][TJSR/DR R]
						[T R/DR R][TS R/DR R]

FIG.86 REAR WHEEL [TUJR][TUSR][TUWR][TUGR]

(F60144M0) リヤーホイール

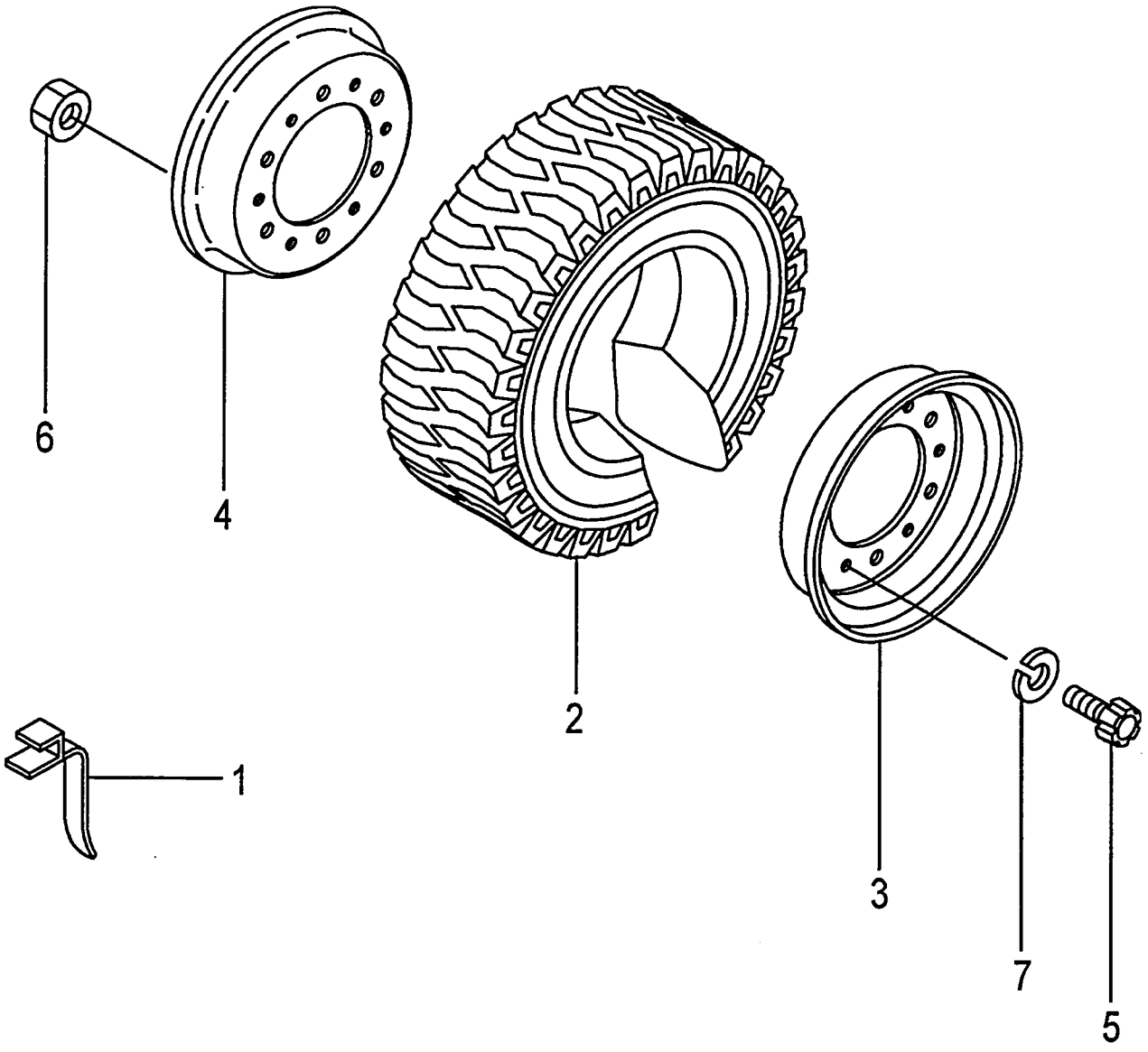

A:FD10C12 FD10T12
B:FD15C12 FD15T12
C:FD18C12 FD18T12

FIG.86
(F60144M0)

Item No	Part No.	Mark	Description		Req'd	Remarks : Serial No.
1	571A6-82081		BELT,EARTH	ﾍﾞﾙﾄ	1	[TUWR][TUGR]
A1	51233-80451		WHEEL-ASSY,REAR	ﾘｱﾎｲｰﾙｱｯｾﾝ	2	[TUJR] INC.2-7
-	51236-80521		WHEEL-ASSY,REAR	ﾘｱﾎｲｰﾙｱｯｾﾝ	2	[TUSR] INC.2-7
-	51236-80501		WHEEL-ASSY,REAR	ﾘｱﾎｲｰﾙｱｯｾﾝ	2	[TUWR] INC.2-7
-	51236-80511		WHEEL-ASSY,REAR	ﾘｱﾎｲｰﾙｱｯｾﾝ	2	[TUGR] INC.2-7
2	06802-50008		TIRE,UNIQUE,500-8	ﾀｲﾔ	2	A,B [TUJR](DUN)
-	06806-50008		TIRE,UNIQUE,500-8	ﾀｲﾔ	2	A,B [TUJR](AIC)
-	06806-50008		TIRE,UNIQUE,500-8	ﾀｲﾔ	2	C [TUJR]
-	06802-50008		TIRE,UNIQUE,500-8	ﾀｲﾔ	2	C [TUJR]
-	06806-50008		TIRE,UNIQUE,500-8	ﾀｲﾔ	2	A,B [TUJR/EX]
-	06802-50008		TIRE,UNIQUE,500-8	ﾀｲﾔ	2	A,B [TUJR/EX]
-	06851-50008		TIRE,SOFTONE,500-8	ﾀｲﾔ	2	[TUSR]
-	06841-50008		TIRE,WHITE,500-8	ﾀｲﾔ	2	[TUWR]
-	06843-50008		TIRE,GREEN,500-8	ﾀｲﾔ	2	[TUGR]
A2	52516-80302		RIM-ASSY,300D-8	ﾘﾑｱｯｾﾝ	2	[TUJR][TUSR][TUWR][TUGR] INC.3-7
3	NO PART NO.	#	RIM,OUTSIDE	ﾘﾑ	2	[TUJR][TUSR][TUWR][TUGR]
4	NO PART NO.	#	RIM,INSIDE	ﾘﾑ	2	[TUJR][TUSR][TUWR][TUGR]
5	514A3-82611		BOLT	ﾎﾞﾙﾄ	12	[TUJR][TUSR][TUWR][TUGR]
6	01400-10012		NUT	ﾅｯﾄ	12	[TUJR][TUSR][TUWR][TUGR]
7	02011-00012		WASHER	ﾜｯｼｬ	12	[TUJR][TUSR][TUWR][TUGR]

FIG.87 REAR WHEEL [TUJR/DR R]

(F60144N0) リヤーホイール

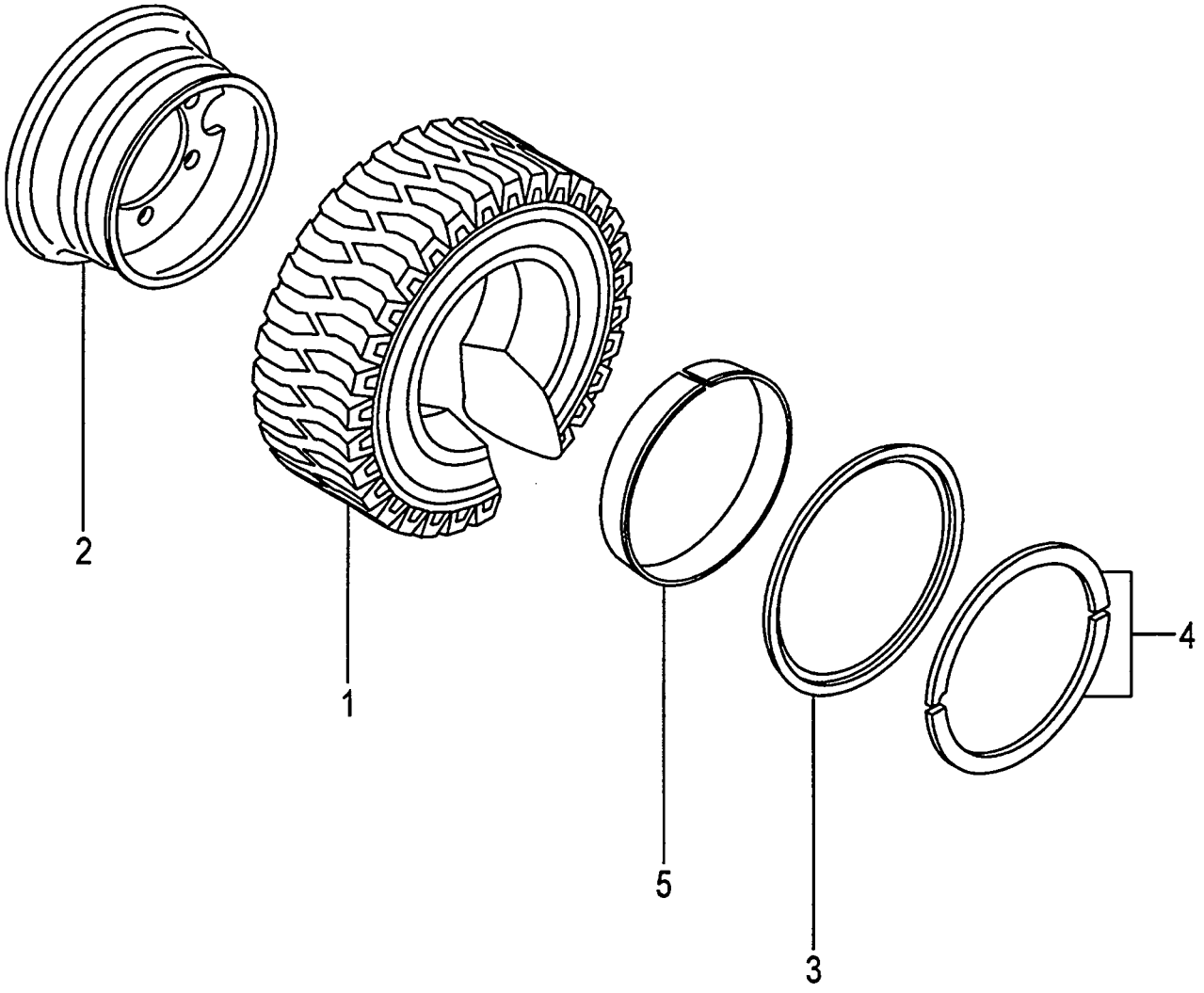

A:FD10C12 FD10T12
B:FD15C12 FD15T12
C:FD18C12 FD18T12

FIG.87
(F60144N0)

Item No	Part No.	Mark	Description		Req'd	Remarks : Serial No.
A1	54236-81521		WHEEL-ASSY,REAR	ﾘｱﾎｲｰﾙｱｯｾﾝ	2	[TUJR/DR R] INC.1-5
1	06805-50008		TIRE,UNIQUE,500-8	ﾀｲﾔ	2	A,B [TUJR/DR R](DUN)
-	06806-50008		TIRE,UNIQUE,500-8	ﾀｲﾔ	2	A,B [TUJR/DR R](AIC)
-	06806-50008		TIRE,UNIQUE,500-8	ﾀｲﾔ	2	C [TUJR/DR R]
-	06805-50008		TIRE,UNIQUE,500-8	ﾀｲﾔ	2	C [TUJR/DR R]
A2	54236-81601		RIM-ASSY,300D-8	ﾘﾑｱｯｾﾝ	2	[TUJR/DR R] INC.2-5
2	NO PART NO.	#	RIM	ﾘﾑ	2	[TUJR/DR R]
3	54236-83081		FLANGE,SIDE	ﾌﾗﾝｼﾞ	2	[TUJR/DR R]
4	54236-83091		RING,LOCK	ﾘﾝｸﾞ	2	[TUJR/DR R]
5	54236-83101		BAND	ﾊﾞﾝﾄﾞ	2	[TUJR/DR R]

FIG.88 REAR WHEEL [TRAR]

(F60144P0) リヤーホイール

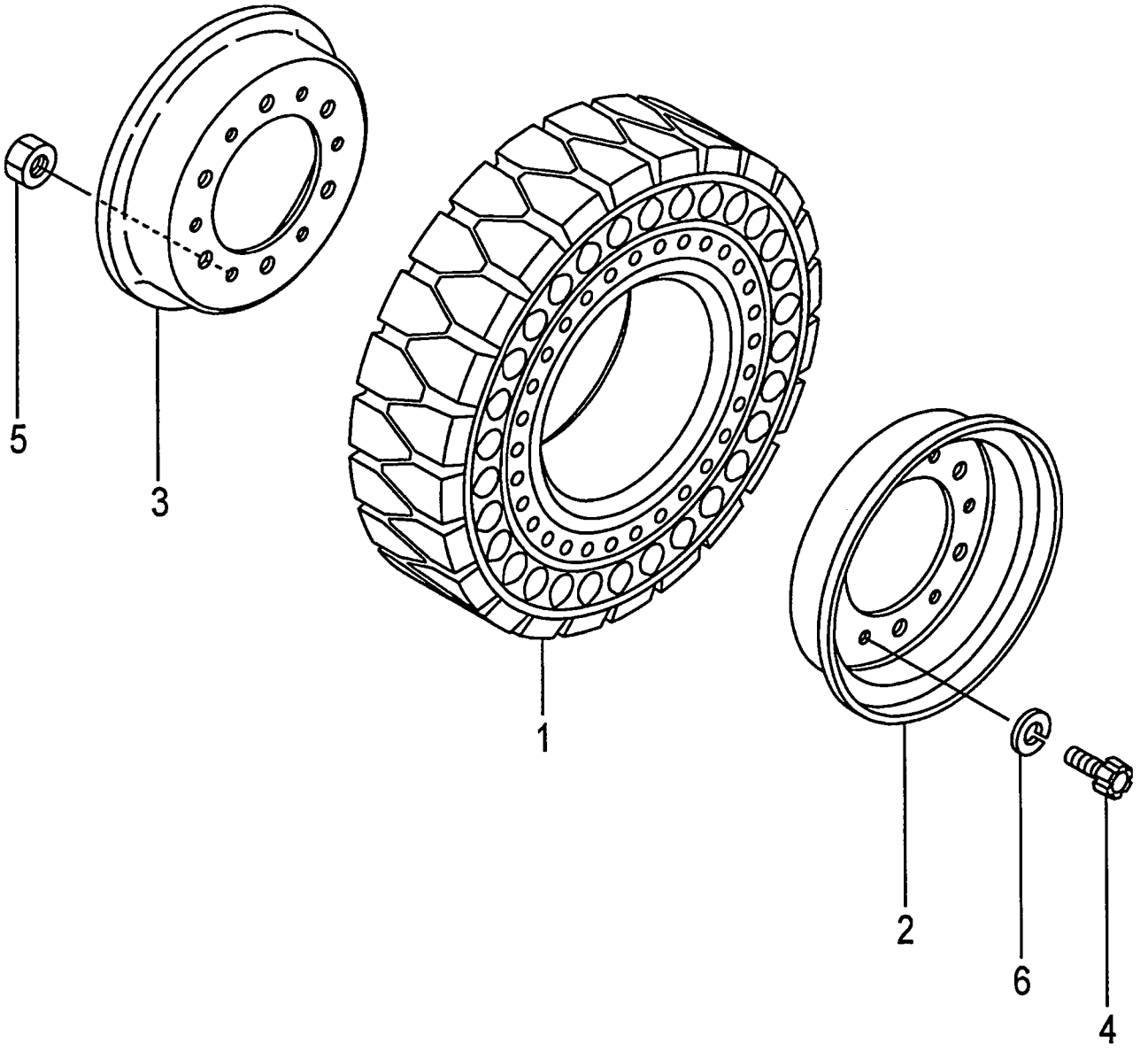

A:FD10C12 FD10T12 FD15C12 FD15T12 FD18C12 FD18T12

Item No	Part No.	Mark	Description		Req'd	Remarks : Serial No.
A1	516G6-80271		WHEEL-ASSY,REAR	リアホイールアッセン	2	[TRAR] INC.1-6
1	516G6-85001		TIRE,AIR-BOSS,500-8	タイヤ	2	[TRAR]
A2	52516-80302		RIM-ASSY,300D-8	リムアッセン	2	[TRAR] INC.2-6
2	NO PART NO.	#	RIM,OUTSIDE	リム	2	[TRAR]
3	NO PART NO.	#	RIM,INSIDE	リム	2	[TRAR]
4	514A3-82611		BOLT	ボルト	12	[TRAR]
5	01400-10012		NUT	ナット	12	[TRAR]
6	02011-00012		WASHER	ワッシャ	12	[TRAR]

FIG.89 FENDER [DD][SDD]

(F60144Q0) ﾌｪﾝﾀﾞ

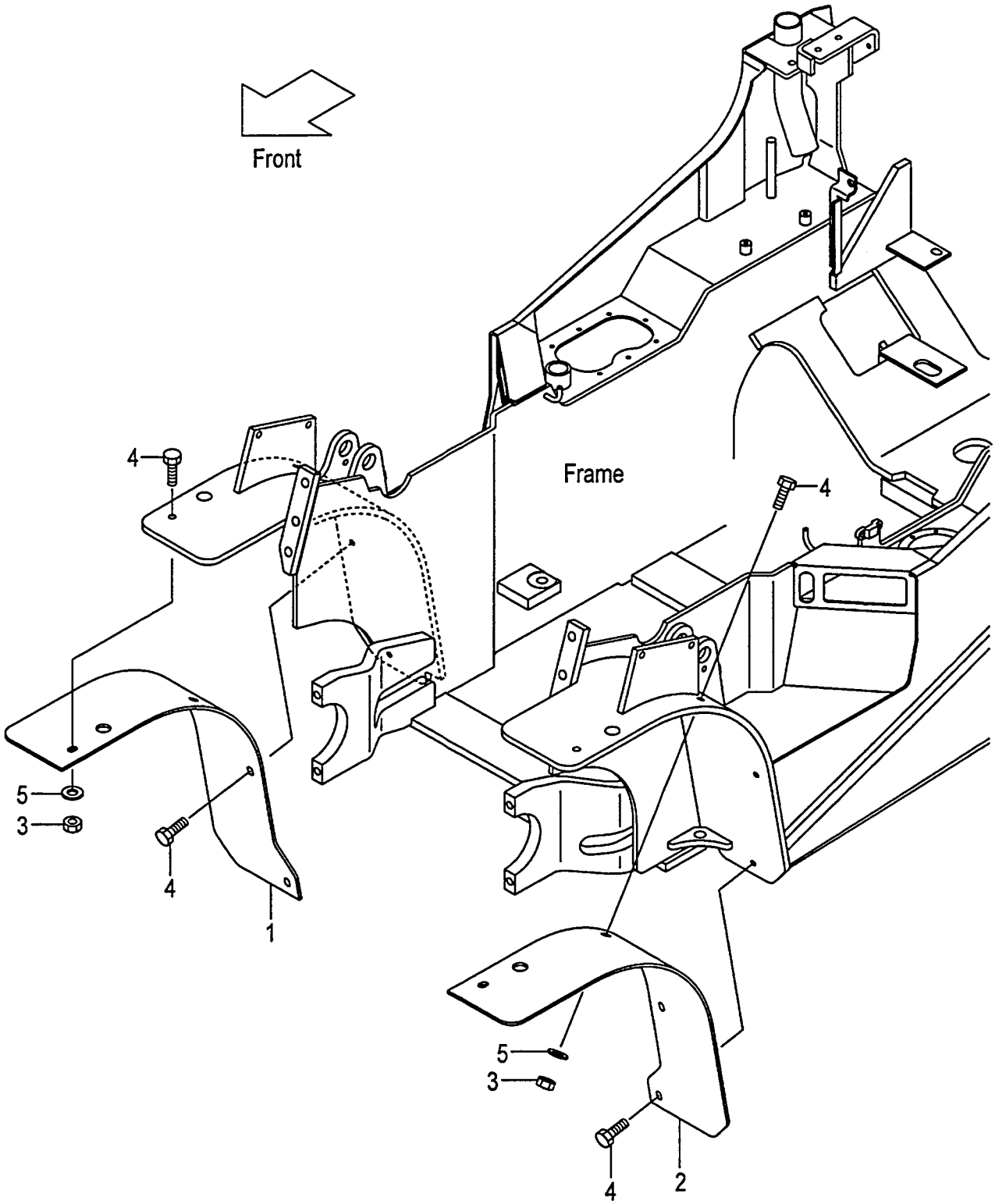

A:FD10C12 FD10T12 FD15C12 FD15T12 FD18C12 FD18T12

Item No	Part No.	Mark	Description		Req'd	Remarks : Serial No.
1	518G7-42001		FENDER,FRONT,RH	ﾌｪﾝﾀﾞ	1	[DD]
-	518G7-42021		FENDER,FRONT,RH	ﾌｪﾝﾀﾞ	1	[SDD]
2	518G7-42011		FENDER,FRONT,LH	ﾌｪﾝﾀﾞ	1	[DD]
-	518G7-42031		FENDER,FRONT,LH	ﾌｪﾝﾀﾞ	1	[SDD]
3	01400-00010		NUT	ﾅｯﾄ	4	[DD][SDD]
4	01186-10030		BOLT	ﾎﾞﾙﾄ	8	[DD][SDD]
5	02000-00010		WASHER	ﾜｯｼｬ	4	[DD][SDD]

FIG.90 POWER CYLINDER

(F6014510) ﾊﾟﾜｰｼﾘﾝﾀﾞ

KIT
K1 901

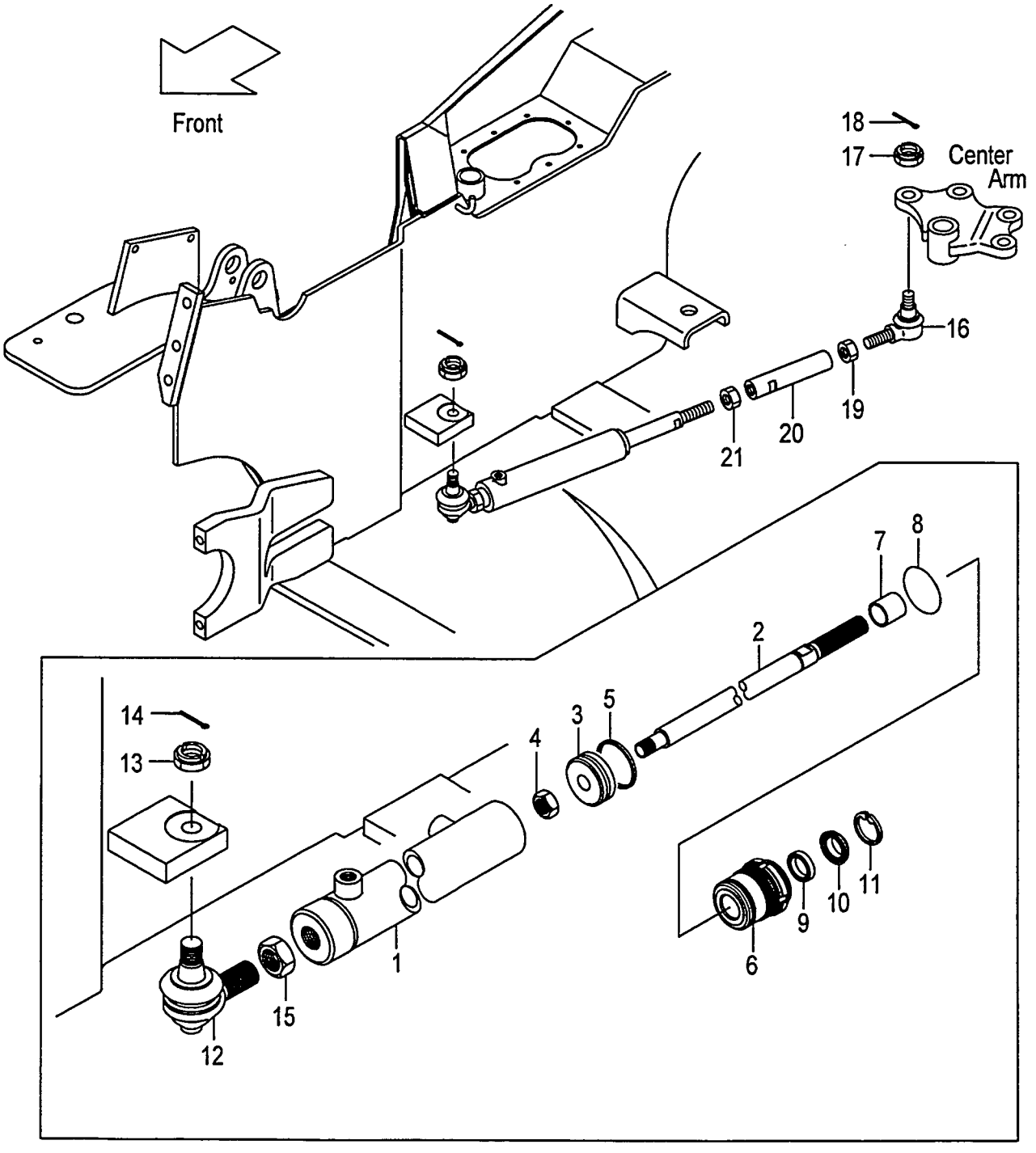

A:FD10C12 FD10T12 FD15C12 FD15T12 FD18C12 FD18T12

Item No	Part No.	Mark	Description		Req'd	Remarks : Serial No.
A1	216G4-50401		CYL-ASSY,PS	ﾊﾟﾜｽﾃｼﾘﾝﾀﾞｱｯｾﾝ	1	INC.1-15
901	25594-59802	K1	KIT,REPAIR	ﾘﾍﾟｱｷｯﾄ	1	INC.5,8-11
1	216G4-52101		TUBE,CYL	ﾁｭｰﾌﾞ	1	
2	25594-52271		ROD,PISTON	ﾛｯﾄﾞ	1	
3	25594-52281		PISTON	ﾋﾟｽﾄﾝ	1	
4	01402-10016		NUT	ﾅｯﾄ	1	
5	25594-52362	*	SEAL,SLIPPER	ｼｰﾙ	1	
6	25594-52401		CAP,CYL	ｷｬｯﾌﾟ	1	
7	25594-52411		BUSHING	ﾌﾞｯｼﾝｸﾞ	1	
8	03350-00450	*	O-RING	Oﾘﾝｸﾞ	1	
9	25594-52371	*	PACKING	ﾊﾟｯｷﾝｸﾞ	1	
10	25594-52381	*	SEAL,DUST	ｼｰﾙ	1	
11	25594-52391	*	RING,SNAP	ｽﾅｯﾌﾟﾘﾝｸﾞ	1	
A3	24234-30551		END-ASSY,ROD,RH	ｴﾝﾄﾞｱｯｾﾝ	1	INC.12-14
12	NO PART NO.	#	END,ROD,RH	ｴﾝﾄﾞ	1	
13	01412-10016		NUT,CASTLE	ﾅｯﾄ	1	
14	02200-32032		PIN,COTTER	ﾋﾟﾝ	1	
15	01402-00022		NUT	ﾅｯﾄ	1	
A4	24234-30561		END-ASSY,ROD,LH	ｴﾝﾄﾞｱｯｾﾝ	1	INC.16-18
16	NO PART NO.	#	END,ROD,LH	ｴﾝﾄﾞ	1	
17	01412-10016		NUT,CASTLE	ﾅｯﾄ	1	
18	02200-32032		PIN,COTTER	ﾋﾟﾝ	1	
19	01407-00022		NUT,LH	ﾅｯﾄ	1	
20	216G4-52071		JOINT	ｼﾞｮｲﾝﾄ	1	
21	01402-00020		NUT	ﾅｯﾄ	1	

POWER CYLINDER

FIG.91 [EXC][EXE][EXK][EXN][OBT][EXB/OBT]

(F6014520) ﾊﾟﾜｰｼﾘﾝﾀﾞ

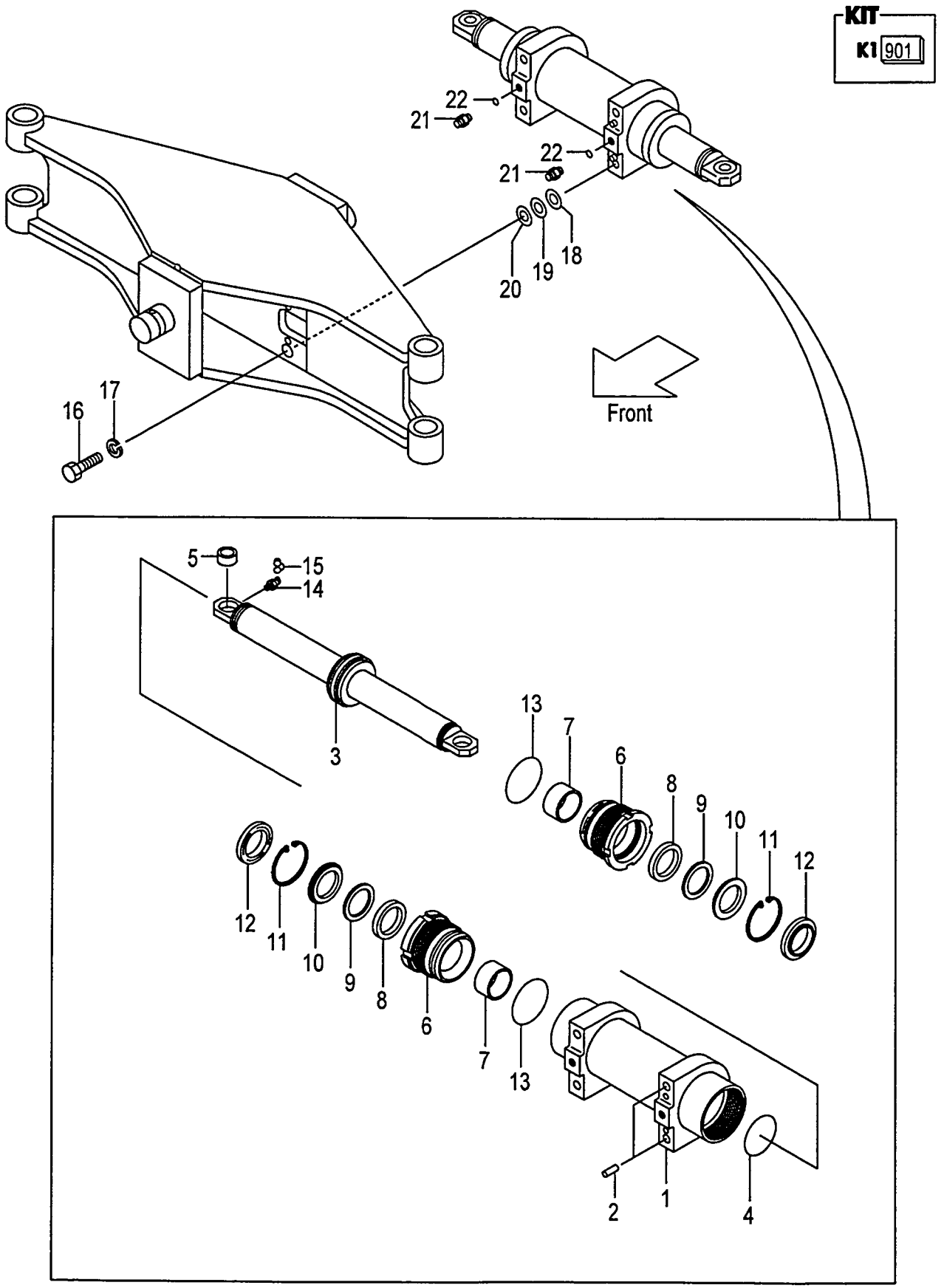

A:FD10C12 FD10T12 FD15C12 FD15T12 FD18C12 FD18T12

Item No	Part No.	Mark	Description		Req'd	Remarks : Serial No.
A1	510F2-40403		CYL-ASSY,PS	ﾊﾟﾜｽﾃｼﾘﾝﾀﾞｱｯｾﾝ	1	[EXC][EXE][EXK][EXN][OBT] [EXB/OBT] INC.1-15
901	25594-59802	K1	KIT,REPAIR	ﾘﾍﾟｱｷｯﾄ	1	[EXC][EXE][EXK][EXN][OBT] [EXB/OBT] INC.4,8,9,11-13
1	510F2-40413		TUBE,CYL	ﾁｭｰﾌﾞ	1	[EXC][EXE][EXK][EXN][OBT] [EXB/OBT]
2	02212-10020		PIN,PARALLEL	ﾋﾟﾝ	2	[EXC][EXE][EXK][EXN][OBT] [EXB/OBT]
3	510F2-40421		ROD,PISTON	ﾛｯﾄﾞ	1	[EXC][EXE][EXK][EXN][OBT] [EXB/OBT]
4	25784-52342	*	SEAL	ｼｰﾙ	1	[EXC][EXE][EXK][EXN][OBT] [EXB/OBT]
5	510F2-42211		JOINT,SPHERE-FACE	ｼﾞｮｲﾝﾄ	2	[EXC][EXE][EXK][EXN][OBT] [EXB/OBT]
6	215B4-52122		CAP,CYL	ｷｬｯﾌﾟ	2	[EXC][EXE][EXK][EXN][OBT] [EXB/OBT]
7	59595-55301		BUSHING	ﾌﾞｯｼﾝｸﾞ	2	[EXC][EXE][EXK][EXN][OBT] [EXB/OBT]
8	25958-52201	*	PACKING	ﾊﾟｯｷﾝｸﾞ	2	[EXC][EXE][EXK][EXN][OBT] [EXB/OBT]
9	25958-52211	*	RING,BACK-UP	ﾘﾝｸﾞ	2	[EXC][EXE][EXK][EXN][OBT] [EXB/OBT]
10	25958-52221		RETAINER	ﾘﾃｰﾅ	2	[EXC][EXE][EXK][EXN][OBT] [EXB/OBT]
11	02110-00062	*	RING,SNAP	ｽﾅｯﾌﾟﾘﾝｸﾞ	2	[EXC][EXE][EXK][EXN][OBT] [EXB/OBT]
12	24469-42701	*	SEAL,DUST	ｼｰﾙ	2	[EXC][EXE][EXK][EXN][OBT] [EXB/OBT]
13	214A8-52221	*	O-RING	Oﾘﾝｸﾞ	2	[EXC][EXE][EXK][EXN][OBT] [EXB/OBT]
14	81160-00025		FITTING	ﾌｨｯﾃｨﾝｸﾞ	2	[EXC][EXE][EXK][EXN][OBT] [EXB/OBT]
15	22199-12401		CAP,NIPPLE	ｷｬｯﾌﾟ	2	[EXC][EXE][EXK][EXN][OBT] [EXB/OBT]
16	01100-14030		BOLT	ﾎﾞﾙﾄ	4	[EXC][EXE][EXK][EXN][OBT] [EXB/OBT]
17	02010-00014		WASHER	ﾜｯｼｬ	4	[EXC][EXE][EXK][EXN][OBT] [EXB/OBT]
18	23460-73121		SHIM,T-0.5	ｼﾑ	4	[EXC][EXE][EXK][EXN][OBT] [EXB/OBT]
19	15583-82681		SHIM,T-0.2	ｼﾑ	4	[EXC][EXE][EXK][EXN][OBT] [EXB/OBT]
20	15583-82691		SHIM,T-0.1	ｼﾑ	4	[EXC][EXE][EXK][EXN][OBT] [EXB/OBT]
A3	224W7-62701		NIPPLE-ASSY	ﾆｯﾌﾟﾙｱｯｾﾝ	2	[EXC][EXE][EXK][EXN][OBT] [EXB/OBT] INC.21,22
21	NO PART NO.	#	NIPPLE	ﾆｯﾌﾟﾙ	2	[EXC][EXE][EXK][EXN][OBT] [EXB/OBT]

POWER CYLINDER

FIG.91 [EXC][EXE][EXK][EXN][OBT][EXB/OBT]

(F6014520) ﾊﾟﾜｰｼﾘﾝﾀﾞ

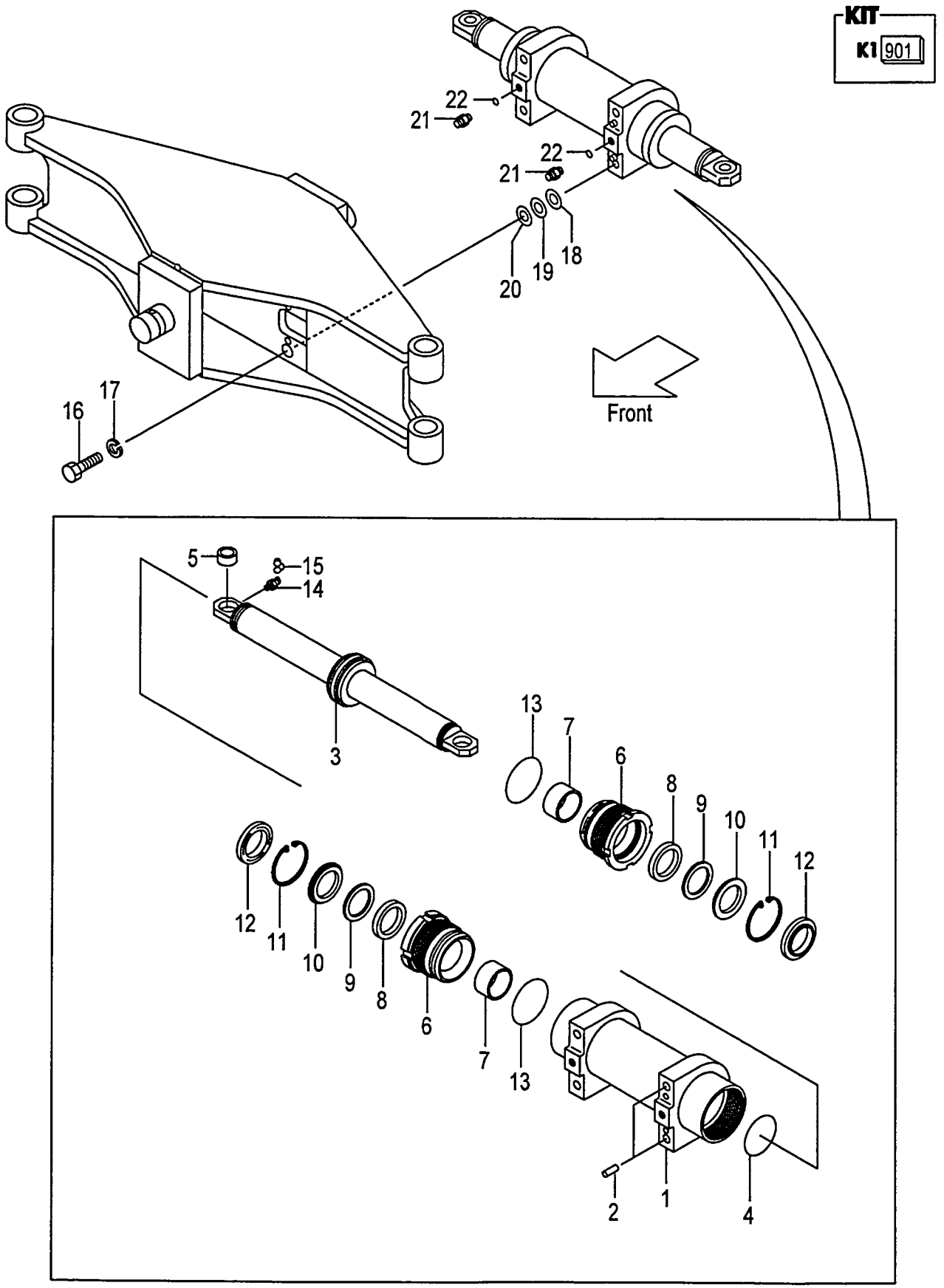

FIG.91
(F6014520)

A:FD10C12 FD10T12 FD15C12 FD15T12 FD18C12 FD18T12

Item No	Part No.	Mark	Description	Req'd	Remarks : Serial No.
22	03320-00110		O-RING Oﾘﾝｸﾞ	2	[EXC][EXE][EXK][EXN][OBT] [EXB/OBT]

FIG.92 POWER CYLINDER [(EXC,EXE,EXK,EXN)/PSS]

(F6014530) ﾊﾟﾜｰｼﾘﾝﾀﾞ

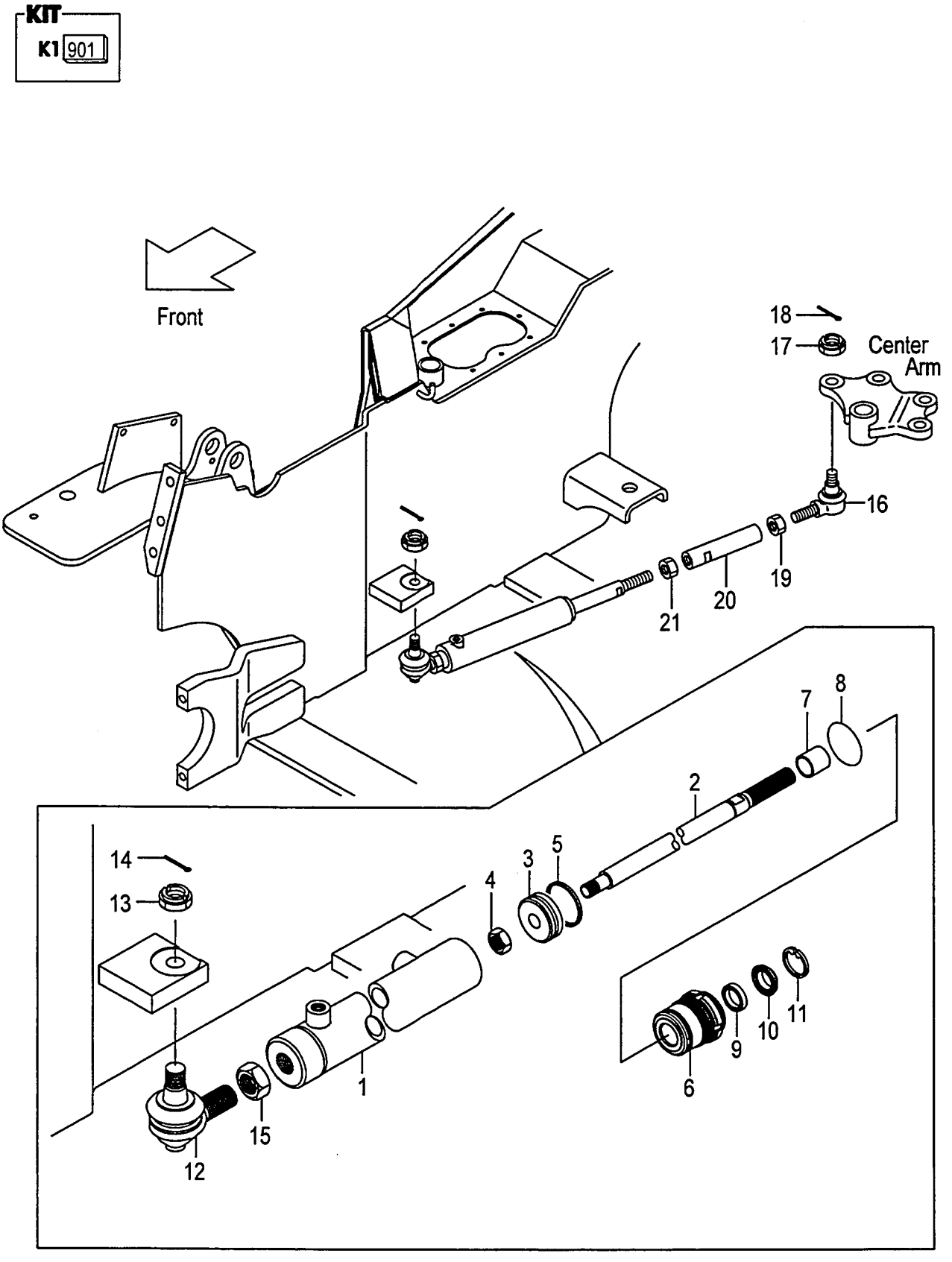

A:FD10C12 FD10T12 FD15C12 FD15T12 FD18C12 FD18T12

Item No	Part No.	Mark	Description		Req'd	Remarks : Serial No.
A1	216G4-50401		CYL-ASSY,PS	ﾊﾟﾜｽﾃｼﾘﾝﾀﾞｱｯｾﾝ	1	[EXC/PSS][EXE/PSS][EXK/PSS] [EXN/PSS] INC.1-15
901	25594-59802	K1	KIT,REPAIR	ﾘﾍﾟｱｷｯﾄ	1	[EXC/PSS][EXE/PSS][EXK/PSS] [EXN/PSS] INC.5,8-11
1	216G4-52101		TUBE,CYL	ﾁｭｰﾌﾞ	1	[EXC/PSS][EXE/PSS][EXK/PSS] [EXN/PSS]
2	25594-52271		ROD,PISTON	ﾛｯﾄﾞ	1	[EXC/PSS][EXE/PSS][EXK/PSS] [EXN/PSS]
3	25594-52281		PISTON	ﾋﾟｽﾄﾝ	1	[EXC/PSS][EXE/PSS][EXK/PSS] [EXN/PSS]
4	01402-10016		NUT	ﾅｯﾄ	1	[EXC/PSS][EXE/PSS][EXK/PSS] [EXN/PSS]
5	25594-52362	*	SEAL,SLIPPER	ｼｰﾙ	1	[EXC/PSS][EXE/PSS][EXK/PSS] [EXN/PSS]
6	25594-52401		CAP,CYL	ｷｬｯﾌﾟ	1	[EXC/PSS][EXE/PSS][EXK/PSS] [EXN/PSS]
7	25594-52411		BUSHING	ﾌﾞｯｼﾝｸﾞ	1	[EXC/PSS][EXE/PSS][EXK/PSS] [EXN/PSS]
8	03350-00450	*	O-RING	Oﾘﾝｸﾞ	1	[EXC/PSS][EXE/PSS][EXK/PSS] [EXN/PSS]
9	25594-52371	*	PACKING	ﾊﾟｯｷﾝｸﾞ	1	[EXC/PSS][EXE/PSS][EXK/PSS] [EXN/PSS]
10	25594-52381	*	SEAL,DUST	ｼｰﾙ	1	[EXC/PSS][EXE/PSS][EXK/PSS] [EXN/PSS]
11	25594-52391	*	RING,SNAP	ｽﾅｯﾌﾟﾘﾝｸﾞ	1	[EXC/PSS][EXE/PSS][EXK/PSS] [EXN/PSS]
A3	24234-30551		END-ASSY,ROD,RH	ｴﾝﾄﾞｱｯｾﾝ	1	[EXC/PSS][EXE/PSS][EXK/PSS] [EXN/PSS] INC.12-14
12	NO PART NO.	#	END,ROD,RH	ｴﾝﾄﾞ	1	[EXC/PSS][EXE/PSS][EXK/PSS] [EXN/PSS]
13	01412-10016		NUT,CASTLE	ﾅｯﾄ	1	[EXC/PSS][EXE/PSS][EXK/PSS] [EXN/PSS]
14	02200-32032		PIN,COTTER	ﾋﾟﾝ	1	[EXC/PSS][EXE/PSS][EXK/PSS] [EXN/PSS]
15	01402-00022		NUT	ﾅｯﾄ	1	[EXC/PSS][EXE/PSS][EXK/PSS] [EXN/PSS]
A4	24234-30561		END-ASSY,ROD,LH	ｴﾝﾄﾞｱｯｾﾝ	1	[EXC/PSS][EXE/PSS][EXK/PSS] [EXN/PSS] INC.16-18
16	NO PART NO.	#	END,ROD,LH	ｴﾝﾄﾞ	1	[EXC/PSS][EXE/PSS][EXK/PSS] [EXN/PSS]
17	01412-10016		NUT,CASTLE	ﾅｯﾄ	1	[EXC/PSS][EXE/PSS][EXK/PSS] [EXN/PSS]
18	02200-32032		PIN,COTTER	ﾋﾟﾝ	1	[EXC/PSS][EXE/PSS][EXK/PSS] [EXN/PSS]
19	01407-00022		NUT,LH	ﾅｯﾄ	1	[EXC/PSS][EXE/PSS][EXK/PSS] [EXN/PSS]
20	216G4-52071		JOINT	ｼﾞｮｲﾝﾄ	1	[EXC/PSS][EXE/PSS][EXK/PSS] [EXN/PSS]

FIG.92 POWER CYLINDER [(EXC,EXE,EXK,EXN)/PSS]

(F6014530) ﾊﾟﾜｰｼﾘﾝﾀﾞ

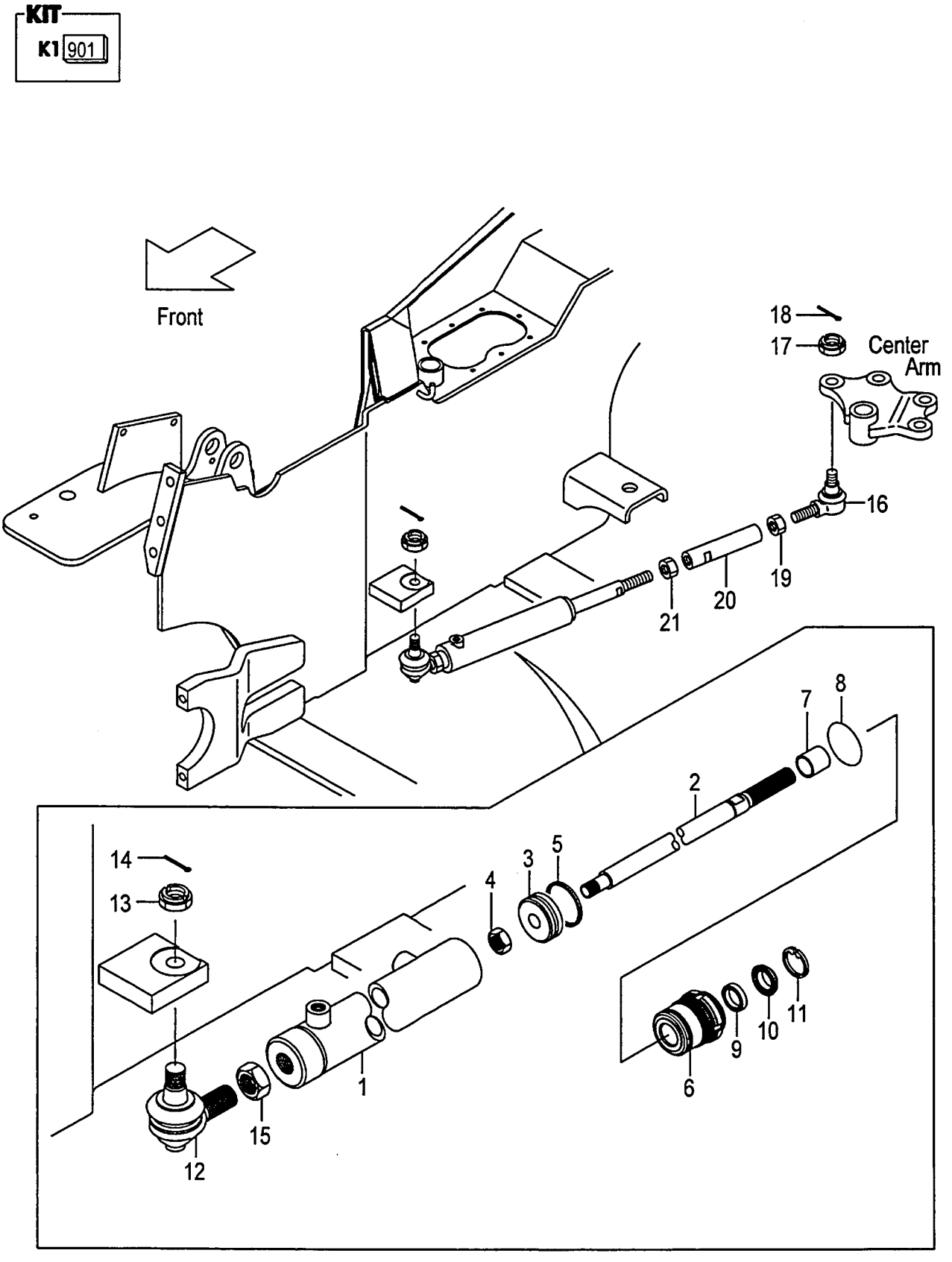

FIG.92
(F6014530)

A:FD10C12 FD10T12 FD15C12 FD15T12 FD18C12 FD18T12

Item No	Part No.	Mark	Description	Req'd	Remarks : Serial No.
21	01402-00020		NUT ﾅｯﾄ	1	[EXC/PSS][EXE/PSS][EXK/PSS] [EXN/PSS]

FIG.93 POWER CYLINDER BOOT [PSB][FC][RINFC]

(F6014540) ﾊﾟﾜｰｼﾘﾝﾀﾞﾌﾞｰﾂ

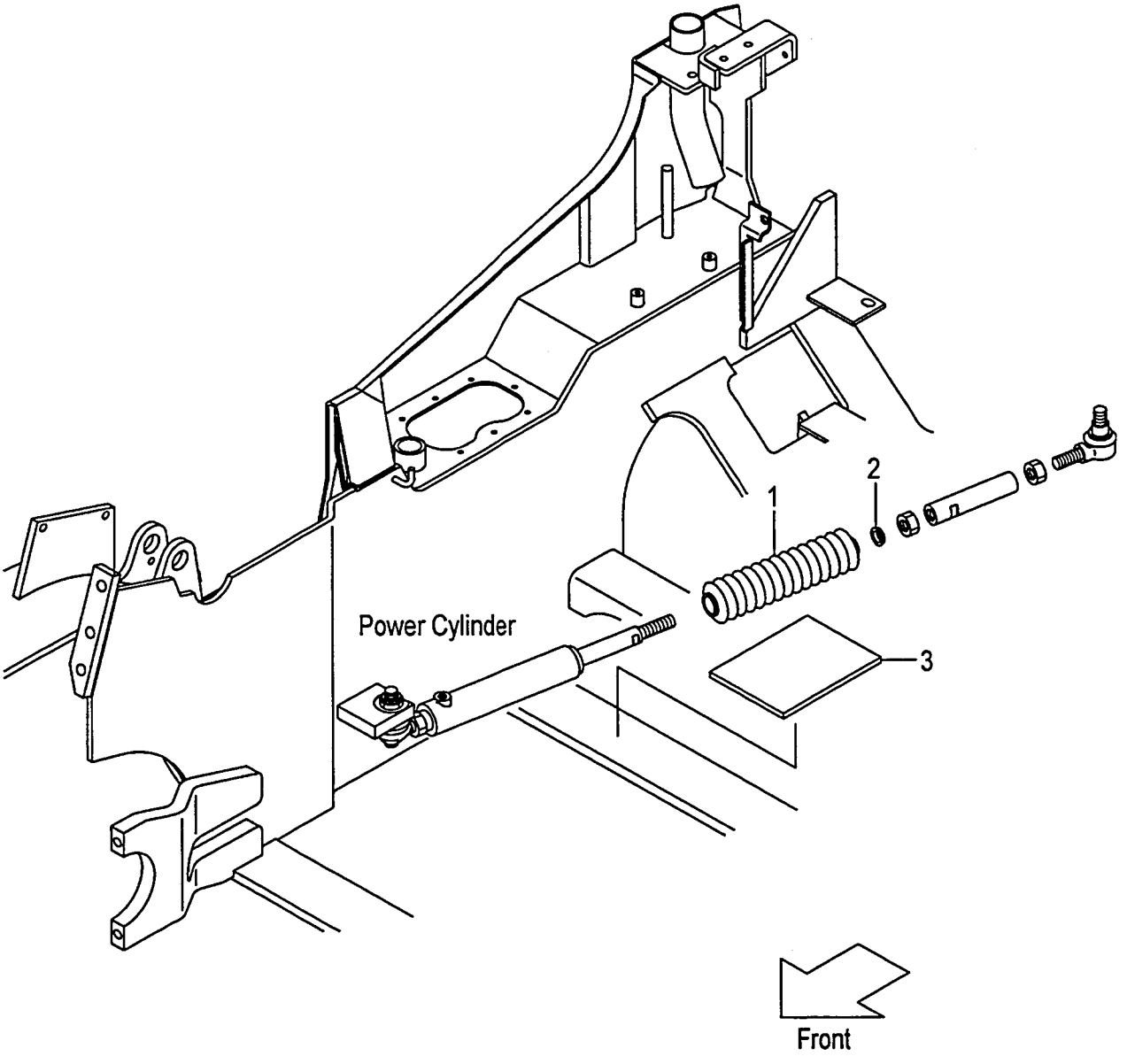

FIG.93
(F6014540)

A:FD10C12 FD10T12 FD15C12 FD15T12 FD18C12 FD18T12

Item No	Part No.	Mark	Description	Req'd	Remarks : Serial No.
1	25594-52431		BOOT,POWER-CYL ﾌﾞｰﾂ	1	[PSB][FC][RINFC]
2	216G4-52041		HANGER,BOOT ﾊﾝｶﾞ	1	[PSB][FC][RINFC]
3	216G4-52051		RUBBER ﾗﾊﾞｰ	1	[PSB][FC][RINFC]

FIG.94 OVERHEAD GUARD

(F6015110) オーバヘッドガード

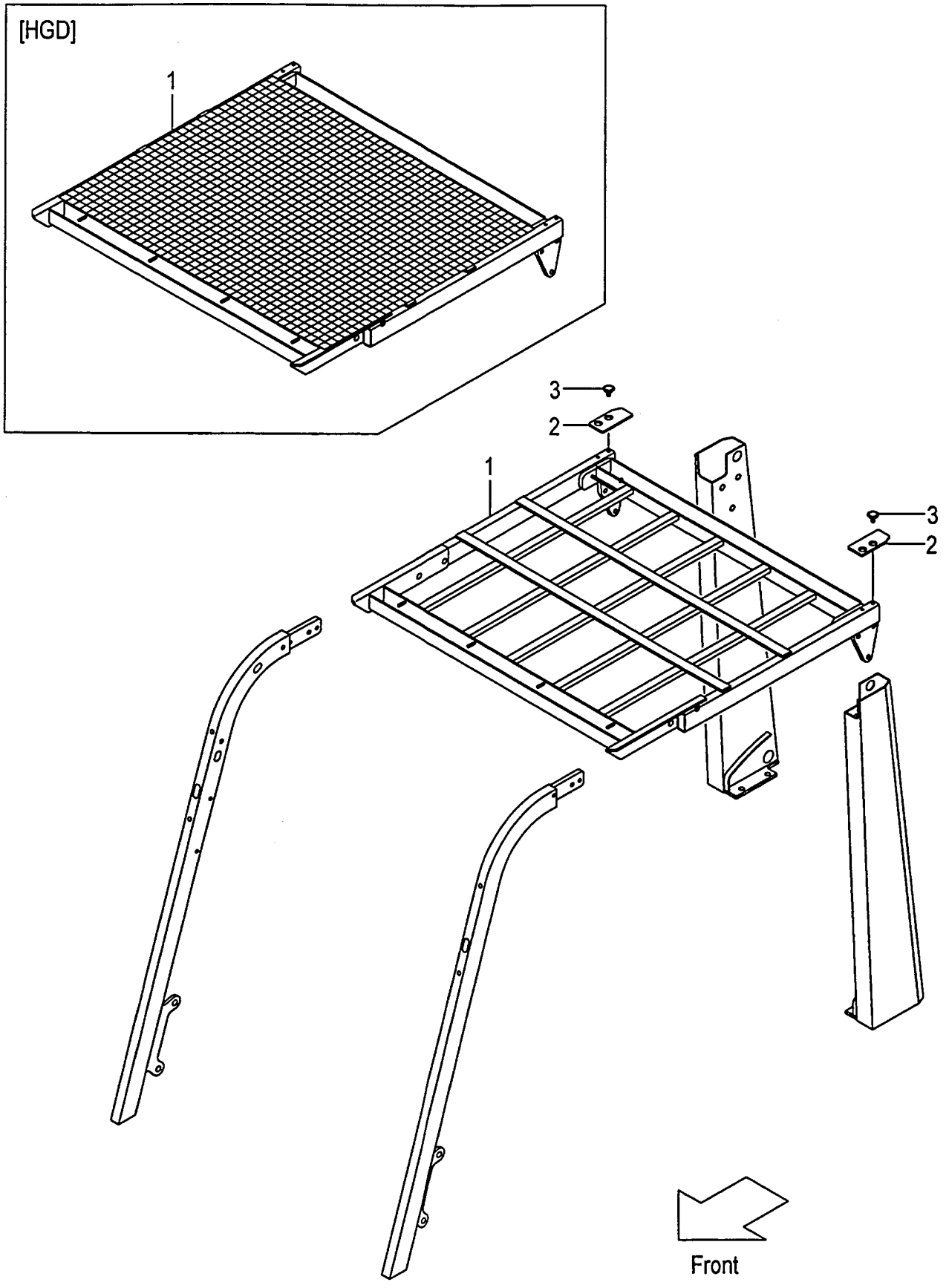

A:FD10C12 FD10T12 FD15C12 FD15T12 FD18C12 FD18T12

Item No	Part No.	Mark	Description		Req'd	Remarks : Serial No.
1	218M5-10401		GUARD,HEAD	ｶﾞｰﾄﾞ	1	(WITHOUT SCB001,SCBCR)
-	539A2-90201		GUARD,HEAD	ｶﾞｰﾄﾞ	1	[HGD]
-	539A5-00401		GUARD,HEAD	ｶﾞｰﾄﾞ	1	[HGH060]
-	539A5-00701		GUARD,HEAD	ｶﾞｰﾄﾞ	1	[HGH100]
-	539A5-00601		GUARD,HEAD	ｶﾞｰﾄﾞ	1	[HGH200]
2	218M5-12501		COVER	ｶﾊﾞｰ	2	(WITHOUT SCB001,SCBCR)
3	216G6-42541		CLIP	ｸﾘｯﾌﾟ	4	(WITHOUT SCB001,SCBCR)

FIG.95 OVERHEAD GUARD [EXB][EXC][EXE][EXK][EXN]

(F6015180) オーバヘッドガード

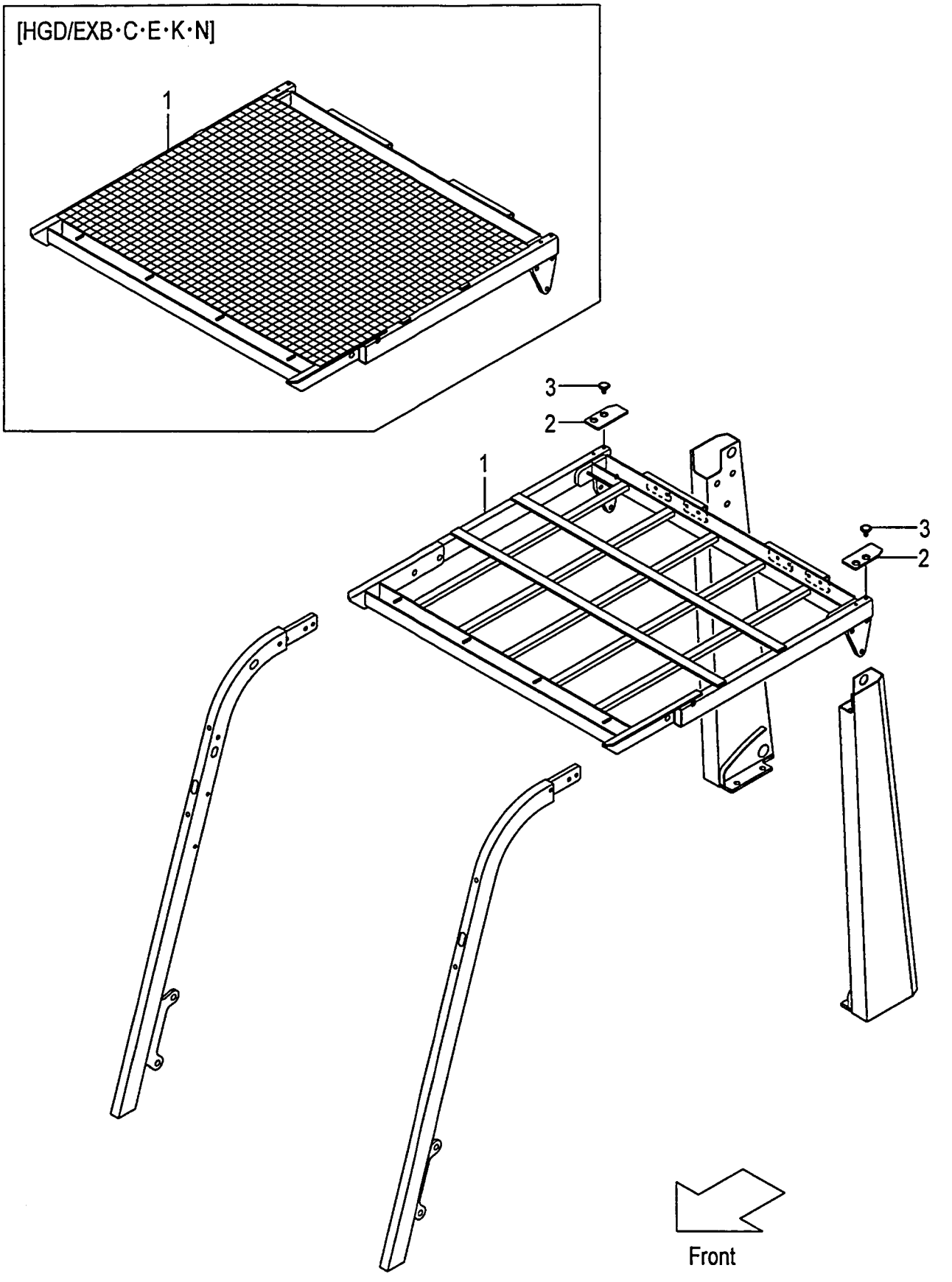

A:FD10C12 FD10T12 FD15C12 FD15T12 FD18C12 FD18T12

Item No	Part No.	Mark	Description		Req'd	Remarks : Serial No.
1	518G2-80231		GUARD,HEAD	ｶﾞｰﾄﾞ	1	[EXB][EXC][EXE][EXK]
-	539A2-60231		GUARD,HEAD	ｶﾞｰﾄﾞ	1	[EXN]
-	539A2-90301		GUARD,HEAD	ｶﾞｰﾄﾞ	1	[HGD/EXB&C&E&K]
-	539A2-90401		GUARD,HEAD	ｶﾞｰﾄﾞ	1	[HGD/EXN]
-	539A2-80301		GUARD,HEAD	ｶﾞｰﾄﾞ	1	[HGH100/EXB&C&E&N&K]
-	539A2-80501		GUARD,HEAD	ｶﾞｰﾄﾞ	1	[HGH200/EXB&C&E&N&K]
2	218M5-12501		COVER	ｶﾊﾞｰ	2	[EXB][EXC][EXE][EXK][EXN]
3	216G6-42541		CLIP	ｸﾘｯﾌﾟ	4	[EXB][EXC][EXE][EXK][EXN]

FIG.96 FRONT PIPE

(F6015120) フロントパイプ

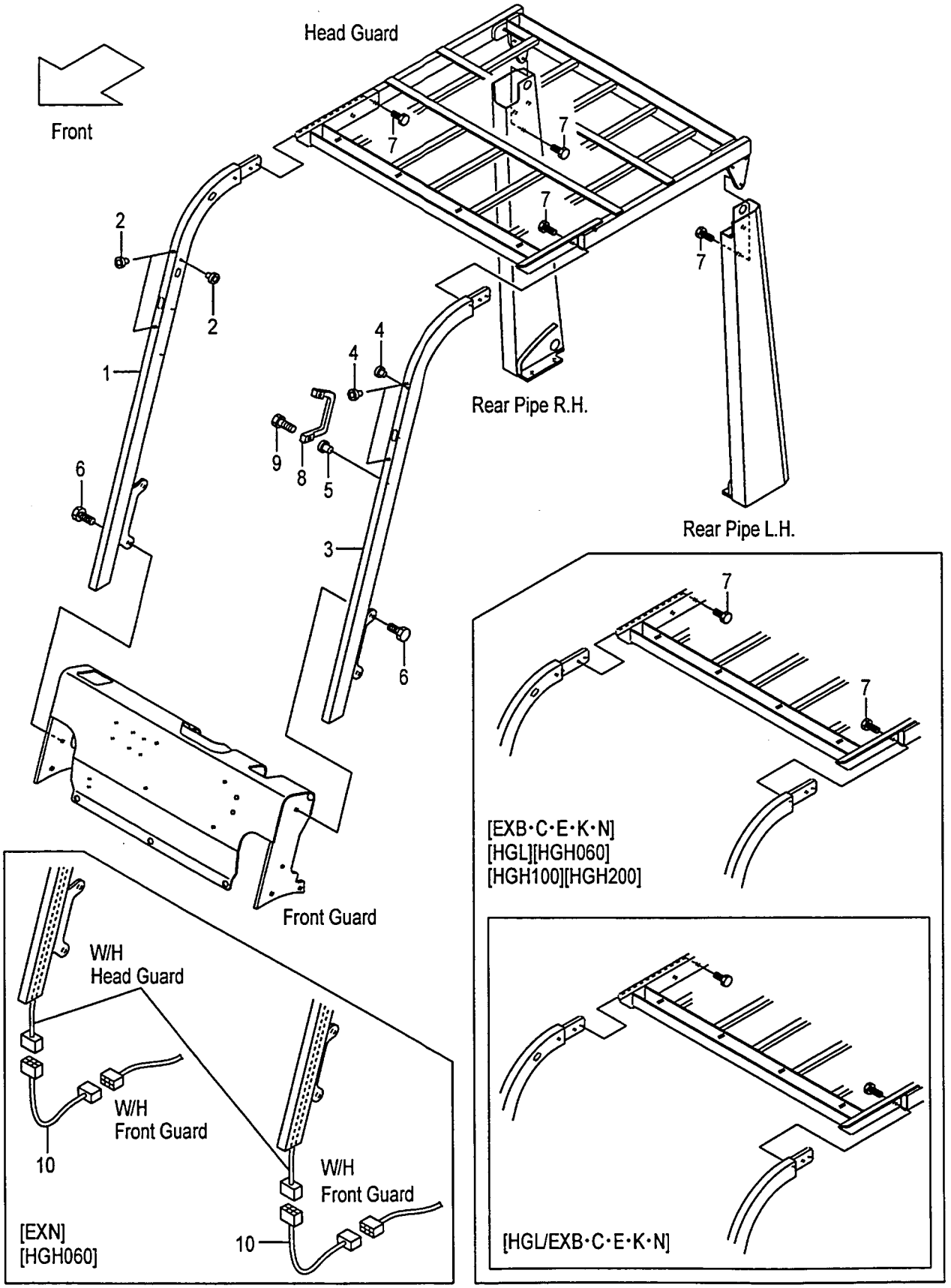

A:FD10C12 FD10T12 FD15C12 FD15T12 FD18C12 FD18T12

Item No	Part No.	Mark	Description		Req'd	Remarks : Serial No.
A1	218G5-10341		PIPE-ASSY,FRONT,RH	ﾌﾛﾝﾄﾊﾟｲﾌﾟｱｯｾﾝ	1	(WITHOUT SCB001,SCBCR) INC.1,2
-	218M5-10341		PIPE-ASSY,FRONT,RH	ﾌﾛﾝﾄﾊﾟｲﾌﾟｱｯｾﾝ	1	[EXB][EXC][EXE][EXK][HGH] INC.1,2
-	518G2-60201		PIPE-ASSY,FRONT,RH	ﾌﾛﾝﾄﾊﾟｲﾌﾟｱｯｾﾝ	1	[EXN][HGH060] INC.1,2
-	218G5-10341		PIPE-ASSY,FRONT,RH	ﾌﾛﾝﾄﾊﾟｲﾌﾟｱｯｾﾝ	1	[HGL/EXB&C&E&K&N] INC.1,2
-	518G2-80151		PIPE-ASSY,FRONT,RH	ﾌﾛﾝﾄﾊﾟｲﾌﾟｱｯｾﾝ	1	[HGH100][HGH100/EXB&C&E&N&K] INC.1,2
-	518G2-80171		PIPE-ASSY,FRONT,RH	ﾌﾛﾝﾄﾊﾟｲﾌﾟｱｯｾﾝ	1	[HGH200][HGH200/EXB&C&E&N&K] INC.1,2
1	NO PART NO.	#	PIPE,FRONT,RH	ﾊﾟｲﾌﾟ	1	(WITHOUT SCB001,SCBCR)
-	NO PART NO.	#	PIPE,FRONT,RH	ﾊﾟｲﾌﾟ	1	[EXB][EXC][EXE][EXK][HGH]
-	NO PART NO.	#	PIPE,FRONT,RH	ﾊﾟｲﾌﾟ	1	[EXN][HGH060]
-	NO PART NO.	#	PIPE,FRONT,RH	ﾊﾟｲﾌﾟ	1	[HGL/EXB&C&E&K&N]
-	NO PART NO.	#	PIPE,FRONT,RH	ﾊﾟｲﾌﾟ	1	[HGH100][HGH100/EXB&C&E&N&K]
-	NO PART NO.	#	PIPE,FRONT,RH	ﾊﾟｲﾌﾟ	1	[HGH200][HGH200/EXB&C&E&N&K]
2	514A5-12011		RIVET,POP	ﾘﾍﾞｯﾄ	3	(WITHOUT SCB001,SCBCR)
A2	218G5-10351		PIPE-ASSY,FRONT,LH	ﾌﾛﾝﾄﾊﾟｲﾌﾟｱｯｾﾝ	1	(WITHOUT SCB001,SCBCR) INC.3-5
-	218M5-10351		PIPE-ASSY,FRONT,LH	ﾌﾛﾝﾄﾊﾟｲﾌﾟｱｯｾﾝ	1	[EXB][EXC][EXE][EXK][HGH] INC.3-5
-	518G2-60211		PIPE-ASSY,FRONT,LH	ﾌﾛﾝﾄﾊﾟｲﾌﾟｱｯｾﾝ	1	[EXN][HGH060] INC.3-5
-	218G5-10351		PIPE-ASSY,FRONT,LH	ﾌﾛﾝﾄﾊﾟｲﾌﾟｱｯｾﾝ	1	[HGL/EXB&C&E&K&N] INC.3-5
-	518G2-80161		PIPE-ASSY,FRONT,LH	ﾌﾛﾝﾄﾊﾟｲﾌﾟｱｯｾﾝ	1	[HGH100][HGH100/EXB&C&E&N&K] INC.3-5
-	518G2-80181		PIPE-ASSY,FRONT,LH	ﾌﾛﾝﾄﾊﾟｲﾌﾟｱｯｾﾝ	1	[HGH200][HGH200/EXB&C&E&N&K] INC.3-5
3	NO PART NO.	#	PIPE,FRONT,LH	ﾊﾟｲﾌﾟ	1	(WITHOUT SCB001,SCBCR)
-	NO PART NO.	#	PIPE,FRONT,LH	ﾊﾟｲﾌﾟ	1	[EXB][EXC][EXE][EXK][HGH]
-	NO PART NO.	#	PIPE,FRONT,LH	ﾊﾟｲﾌﾟ	1	[EXN][HGH060]
-	NO PART NO.	#	PIPE,FRONT,LH	ﾊﾟｲﾌﾟ	1	[HGL/EXB&C&E&K&N]
-	NO PART NO.	#	PIPE,FRONT,LH	ﾊﾟｲﾌﾟ	1	[HGH100][HGH100/EXB&C&E&N&K]
-	NO PART NO.	#	PIPE,FRONT,LH	ﾊﾟｲﾌﾟ	1	[HGH200][HGH200/EXB&C&E&N&K]
4	514A5-12011		RIVET,POP	ﾘﾍﾞｯﾄ	3	(WITHOUT SCB001,SCBCR)
5	516G5-13151		RIVET,POP	ﾘﾍﾞｯﾄ	2	(WITHOUT SCB001,SCBCR)
6	01186-12025		BOLT	ﾎﾞﾙﾄ	4	(WITHOUT SCB001,SCBCR)
7	01186-12035		BOLT	ﾎﾞﾙﾄ	10	(WITHOUT SCB001,SCBCR)
8	516G5-13051		GRIP	ｸﾞﾘｯﾌﾟ	1	(WITHOUT SCB001,SCBCR)
9	01171-06025		BOLT	ﾎﾞﾙﾄ	2	(WITHOUT SCB001,SCBCR)
10	229F2-42141		WIRE-HARNESS,R-COMBINATION	ﾜｲﾔﾊｰﾈｽ	2	[EXN][HGH060]

FIG.97 REAR PIPE

(F6015130) ﾘﾔｰﾊﾟｲﾌﾟ

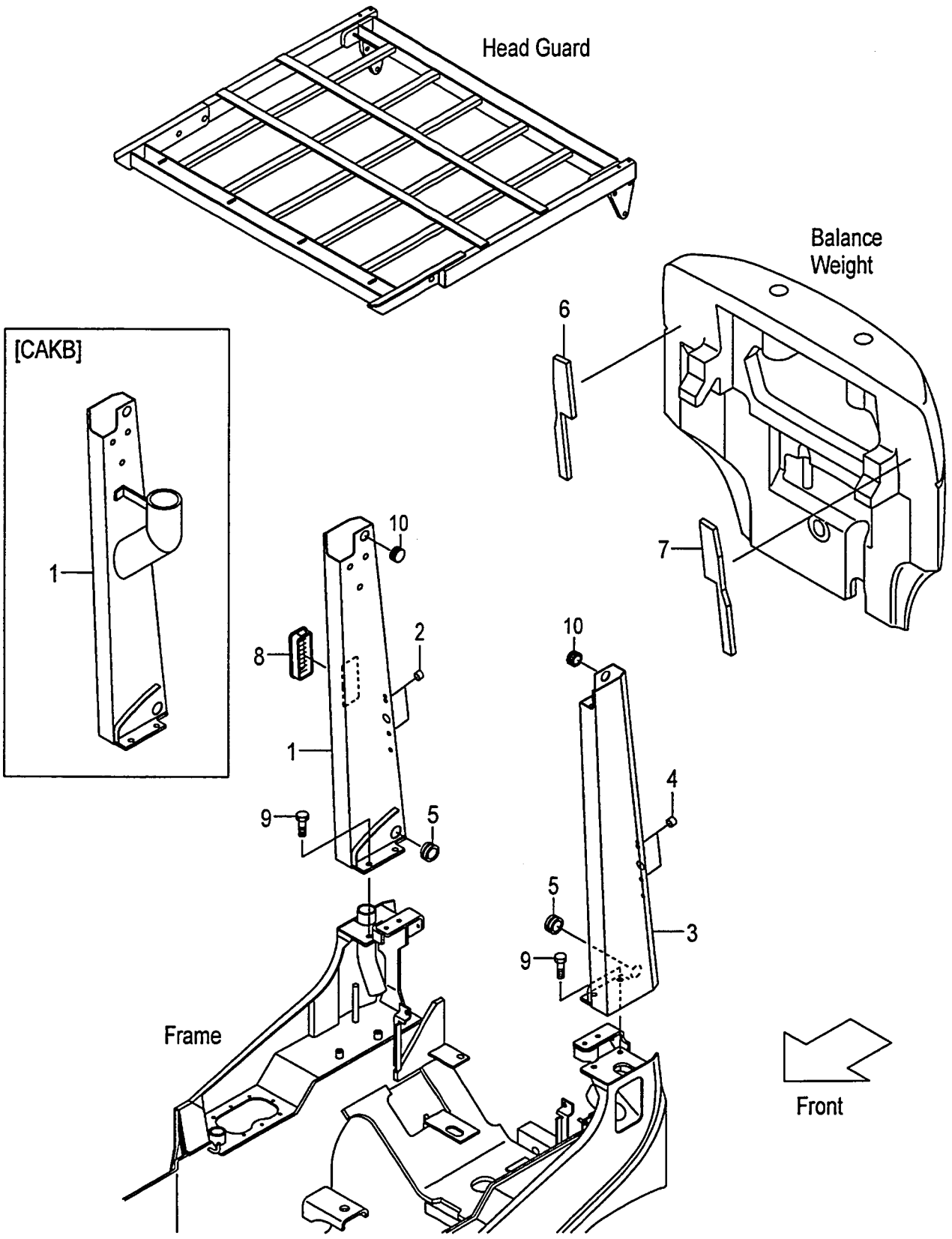

A:FD10C12 FD10T12 FD15C12 FD15T12 FD18C12 FD18T12

Item No	Part No.	Mark	Description		Req'd	Remarks : Serial No.
A1	218G5-10111		PIPE-ASSY,REAR,RH	ﾘﾔｰﾊﾟｲﾌﾟｱｯｾﾝ	1	(WITHOUT SCB001,SCBCR) INC.1,2
-	239A5-10111		PIPE-ASSY,REAR,RH	ﾘﾔｰﾊﾟｲﾌﾟｱｯｾﾝ	1	[HGH] INC.1,2
-	539A5-00111		PIPE-ASSY,REAR,RH	ﾘﾔｰﾊﾟｲﾌﾟｱｯｾﾝ	1	[HGH060] INC.1,2
-	539A5-00351		PIPE-ASSY,REAR,RH	ﾘﾔｰﾊﾟｲﾌﾟｱｯｾﾝ	1	[HGH100] INC.1,2
-	539A5-00371		PIPE-ASSY,REAR,RH	ﾘﾔｰﾊﾟｲﾌﾟｱｯｾﾝ	1	[HGH200] INC.1,2
-	518G0-90111		PIPE-ASSY,REAR,RH	ﾘﾔｰﾊﾟｲﾌﾟｱｯｾﾝ	1	[CAKB] INC.1,2
1	NO PART NO.	#	PIPE,REAR,RH	ﾊﾟｲﾌﾟ	1	(WITHOUT SCB001,SCBCR)
-	NO PART NO.	#	PIPE,REAR,RH	ﾊﾟｲﾌﾟ	1	[HGH]
-	NO PART NO.	#	PIPE,REAR,RH	ﾊﾟｲﾌﾟ	1	[HGH060]
-	NO PART NO.	#	PIPE,REAR,RH	ﾊﾟｲﾌﾟ	1	[HGH100]
-	NO PART NO.	#	PIPE,REAR,RH	ﾊﾟｲﾌﾟ	1	[HGH200]
-	NO PART NO.	#	PIPE,REAR,RH	ﾊﾟｲﾌﾟ	1	[CAKB]
2	514A5-12011		RIVET,POP	ﾘﾍﾞｯﾄ	2	(WITHOUT SCB001,SCBCR)
A2	218G5-10121		PIPE-ASSY,REAR,LH	ﾘﾔｰﾊﾟｲﾌﾟｱｯｾﾝ	1	(WITHOUT SCB001,SCBCR) INC.3,4
-	239A5-10121		PIPE-ASSY,REAR,LH	ﾘﾔｰﾊﾟｲﾌﾟｱｯｾﾝ	1	[HGH] INC.3,4
-	539A5-00361		PIPE-ASSY,REAR,LH	ﾘﾔｰﾊﾟｲﾌﾟｱｯｾﾝ	1	[HGH060] INC.3,4
-	539A5-00381		PIPE-ASSY,REAR,LH	ﾘﾔｰﾊﾟｲﾌﾟｱｯｾﾝ	1	[HGH100]
-	539A5-00121		PIPE-ASSY,REAR,LH	ﾘﾔｰﾊﾟｲﾌﾟｱｯｾﾝ	1	[HGH200]
3	NO PART NO.	#	PIPE,REAR,LH	ﾊﾟｲﾌﾟ	1	(WITHOUT SCB001,SCBCR)
-	NO PART NO.	#	PIPE,REAR,LH	ﾊﾟｲﾌﾟ	1	[HGH]
-	NO PART NO.	#	PIPE,REAR,LH	ﾊﾟｲﾌﾟ	1	[HGH060]
-	NO PART NO.	#	PIPE,REAR,LH	ﾊﾟｲﾌﾟ	1	[HGH100]
-	NO PART NO.	#	PIPE,REAR,LH	ﾊﾟｲﾌﾟ	1	[HGH200]
4	514A5-12011		RIVET,POP	ﾘﾍﾞｯﾄ	2	(WITHOUT SCB001,SCBCR)
5	524W5-12091		GROMMET	ｸﾞﾛﾒｯﾄ	2	(WITHOUT SCB001,SCBCR)
6	239A5-12401		RUBBER,WEIGHT,RH	ﾗﾊﾞｰ	1	(WITHOUT SCB001,SCBCR)
7	239A5-12411		RUBBER,WEIGHT,LH	ﾗﾊﾞｰ	1	(WITHOUT SCB001,SCBCR)
8	230C1-02041		COVER,AIR-INTAKE	ｶﾊﾞｰ	1	(WITHOUT CAKB,SCB001,SCBCR)
9	01186-12025		BOLT	ﾎﾞﾙﾄ	4	(WITHOUT SCB001,SCBCR)
10	27662-62721		GROMMET	ｸﾞﾛﾒｯﾄ	2	(WITHOUT SCB001,SCBCR)

FIG.98 REAR PIPE [EXB][EXC][EXE][EXK][EXN]

(F6015140) リヤーパイプ

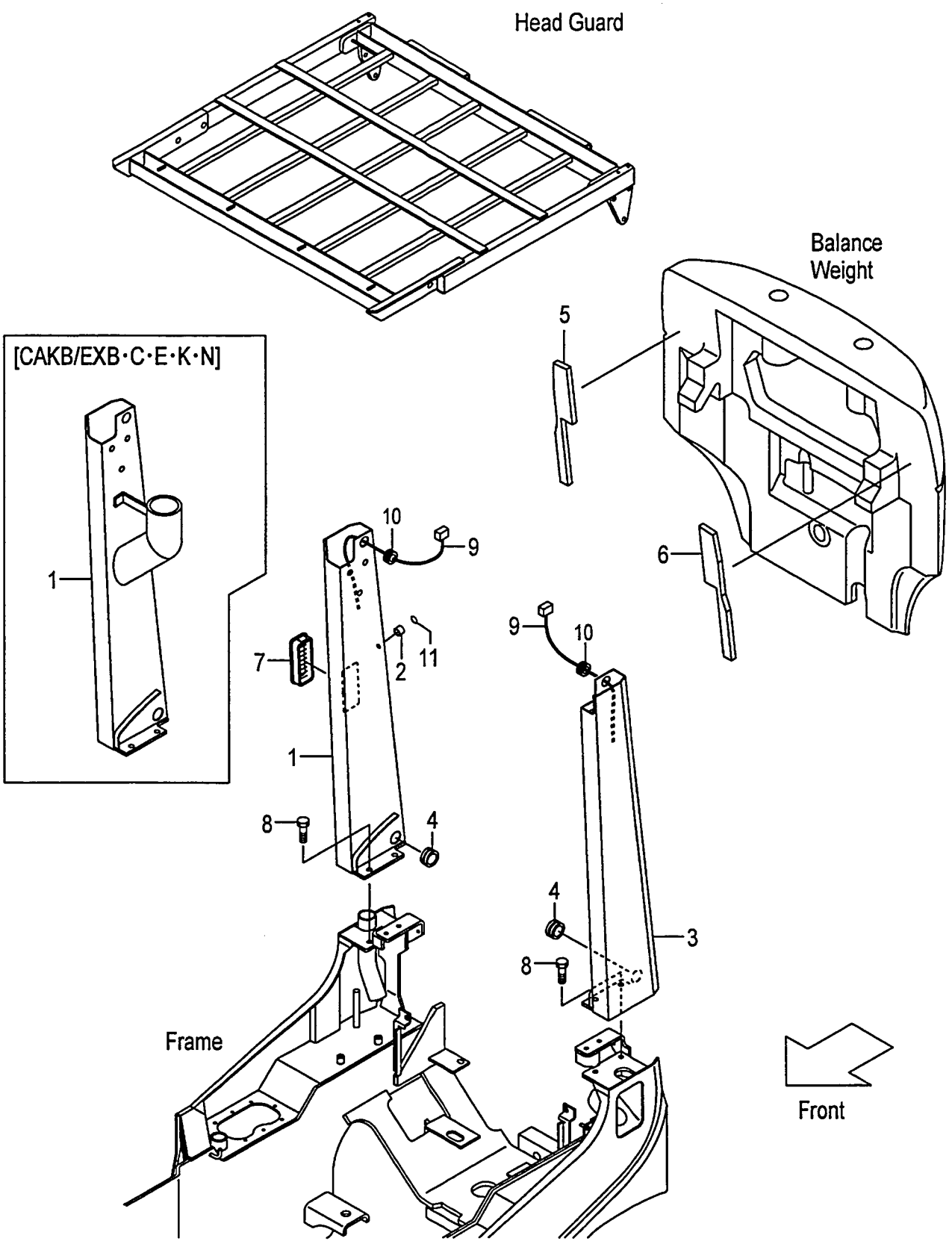

A:FD10C12 FD10T12 FD15C12 FD15T12 FD18C12 FD18T12

Item No	Part No.	Mark	Description		Req'd	Remarks : Serial No.
A1	539A2-80111		PIPE-ASSY,REAR,RH	ﾘﾔｰﾊﾟｲﾌﾟｱｯｾﾝ	1	[EXB][EXC][EXE][EXK] INC.1,2
-	539A2-60111		PIPE-ASSY,REAR,RH	ﾘﾔｰﾊﾟｲﾌﾟｱｯｾﾝ	1	[EXN] INC.1,2
-	518G2-80101		PIPE-ASSY,REAR,RH	ﾘﾔｰﾊﾟｲﾌﾟｱｯｾﾝ	1	[HGL/EXB&C&E&K&N] INC.1,2
-	539A2-80151		PIPE-ASSY,REAR,RH	ﾘﾔｰﾊﾟｲﾌﾟｱｯｾﾝ	1	[HGH100/EXB&C&E&K&N] INC.1,2
-	539A2-80161		PIPE-ASSY,REAR,RH	ﾘﾔｰﾊﾟｲﾌﾟｱｯｾﾝ	1	[HGH200/EXB&C&E&K&N] INC.1,2
-	539C0-90051		PIPE-ASSY,REAR,RH	ﾘﾔｰﾊﾟｲﾌﾟｱｯｾﾝ	1	[CAKB/EXB&C&E&K] INC.1,2
-	539C0-90061		PIPE-ASSY,REAR,RH	ﾘﾔｰﾊﾟｲﾌﾟｱｯｾﾝ	1	[CAKB/EXN] INC.1,2
-	518G0-90211		PIPE-ASSY,REAR,RH	ﾘﾔｰﾊﾟｲﾌﾟｱｯｾﾝ	1	[CAKB/HGL/EXB&C&E&K&N] INC.1,2
1	NO PART NO.	#	PIPE,REAR,RH	ﾊﾟｲﾌﾟ	1	[EXB][EXC][EXE][EXK]
-	NO PART NO.	#	PIPE,REAR,RH	ﾊﾟｲﾌﾟ	1	[EXN]
-	NO PART NO.	#	PIPE,REAR,RH	ﾊﾟｲﾌﾟ	1	[HGL/EXB&C&E&K&N]
-	NO PART NO.	#	PIPE,REAR,RH	ﾊﾟｲﾌﾟ	1	[HGH100/EXB&C&E&K&N]
-	NO PART NO.	#	PIPE,REAR,RH	ﾊﾟｲﾌﾟ	1	[HGH200/EXB&C&E&K&N]
-	NO PART NO.	#	PIPE,REAR,RH	ﾊﾟｲﾌﾟ	1	[CAKB/EXB&C&E&K]
-	NO PART NO.	#	PIPE,REAR,RH	ﾊﾟｲﾌﾟ	1	[CAKB/EXN]
-	NO PART NO.	#	PIPE,REAR,RH	ﾊﾟｲﾌﾟ	1	[CAKB/HGL/EXB&C&E&K&N]
2	514A5-12011		RIVET,POP	ﾘﾍﾞｯﾄ	1	[EXB][EXC][EXE][EXK][EXN]
3	539A2-80221		PIPE,REAR,LH	ﾊﾟｲﾌﾟ	1	[EXB][EXC][EXE][EXK]
-	539A2-60221		PIPE,REAR,LH	ﾊﾟｲﾌﾟ	1	[EXN]
-	518G2-80121		PIPE,REAR,LH	ﾊﾟｲﾌﾟ	1	[HGL/EXB&C&E&K&N]
-	539A2-80371		PIPE,REAR,LH	ﾊﾟｲﾌﾟ	1	[HGH100/EXB&C&E&K&N]
-	539A2-80571		PIPE,REAR,LH	ﾊﾟｲﾌﾟ	1	[HGH200/EXB&C&E&K&N]
-	518G2-80121		PIPE,REAR,LH	ﾊﾟｲﾌﾟ	1	[CAKB/HGL/EXB&C&E&K&N]
4	524W5-12091		GROMMET	ｸﾞﾛﾒｯﾄ	2	[EXB][EXC][EXE][EXK][EXN]
5	239A5-12401		RUBBER,WEIGHT,RH	ﾗﾊﾞｰ	1	[EXB][EXC][EXE][EXK][EXN]
6	239A5-12411		RUBBER,WEIGHT,LH	ﾗﾊﾞｰ	1	[EXB][EXC][EXE][EXK][EXN]
7	230C1-02041		COVER,AIR-INTAKE	ｶﾊﾞｰ	1	[EXB][EXC][EXE][EXK][EXN] (WITHOUT CAKB/EX)
8	01186-12025		BOLT	ﾎﾞﾙﾄ	4	[EXB][EXC][EXE][EXK][EXN]
9	514T2-72061		WIRE-HARNESS,R-COMBINATION	ﾜｲﾔﾊｰﾈｽ	2	[EXB][EXC][EXE][EXK][EXN]
10	22679-47301		GROMMET	ｸﾞﾛﾒｯﾄ	2	[EXB][EXC][EXE][EXK][EXN]
11	539A2-82251		SEAL,COVER	ｼｰﾙ	1	[EXB][EXC][EXE][EXK][EXN]

FIG.99 FRONT LAMP BRACKET

(F6015150) フロントランプブラケット

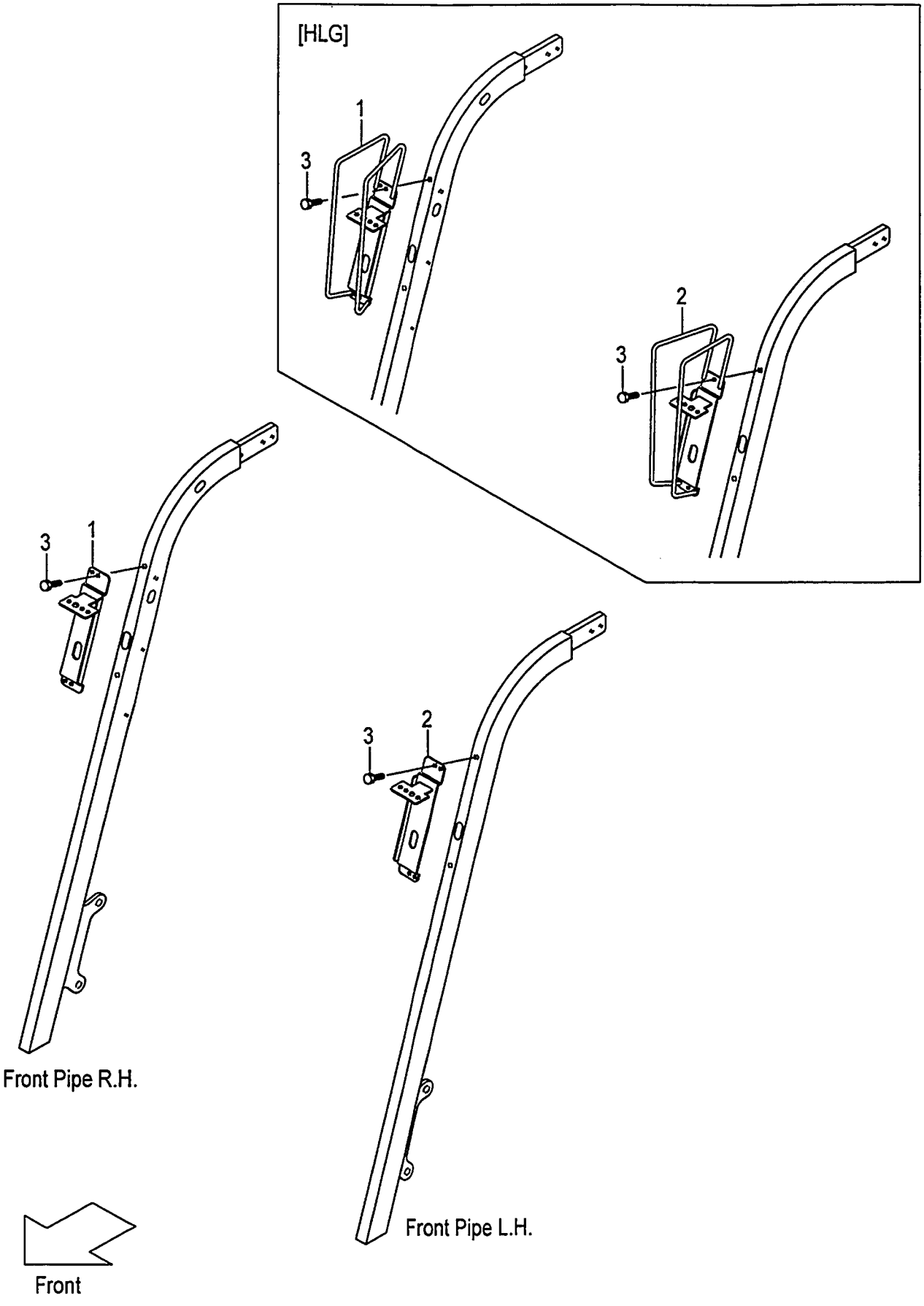

FIG.99
(F6015150)

A:FD10C12 FD10T12 FD15C12 FD15T12 FD18C12 FD18T12

Item No	Part No.	Mark	Description	Req'd	Remarks : Serial No.
1	239A5-12501		BRACKET,HEAD-LAMP,RH ﾌﾞﾗｹｯﾄ	1	
-	539A5-12041		BRACKET,HEAD-LAMP,RH ﾌﾞﾗｹｯﾄ	1	[HLG]
2	239A5-12521		BRACKET,HEAD-LAMP,LH ﾌﾞﾗｹｯﾄ	1	
-	539A5-12011		BRACKET,HEAD-LAMP,LH ﾌﾞﾗｹｯﾄ	1	[HLG]
3	01183-08016		BOLT ﾎﾞﾙﾄ	4	

FIG.100 FRONT LAMP BRACKET [HL][HL/HLG][BKH]

(F6015190) フロントランプブラケット

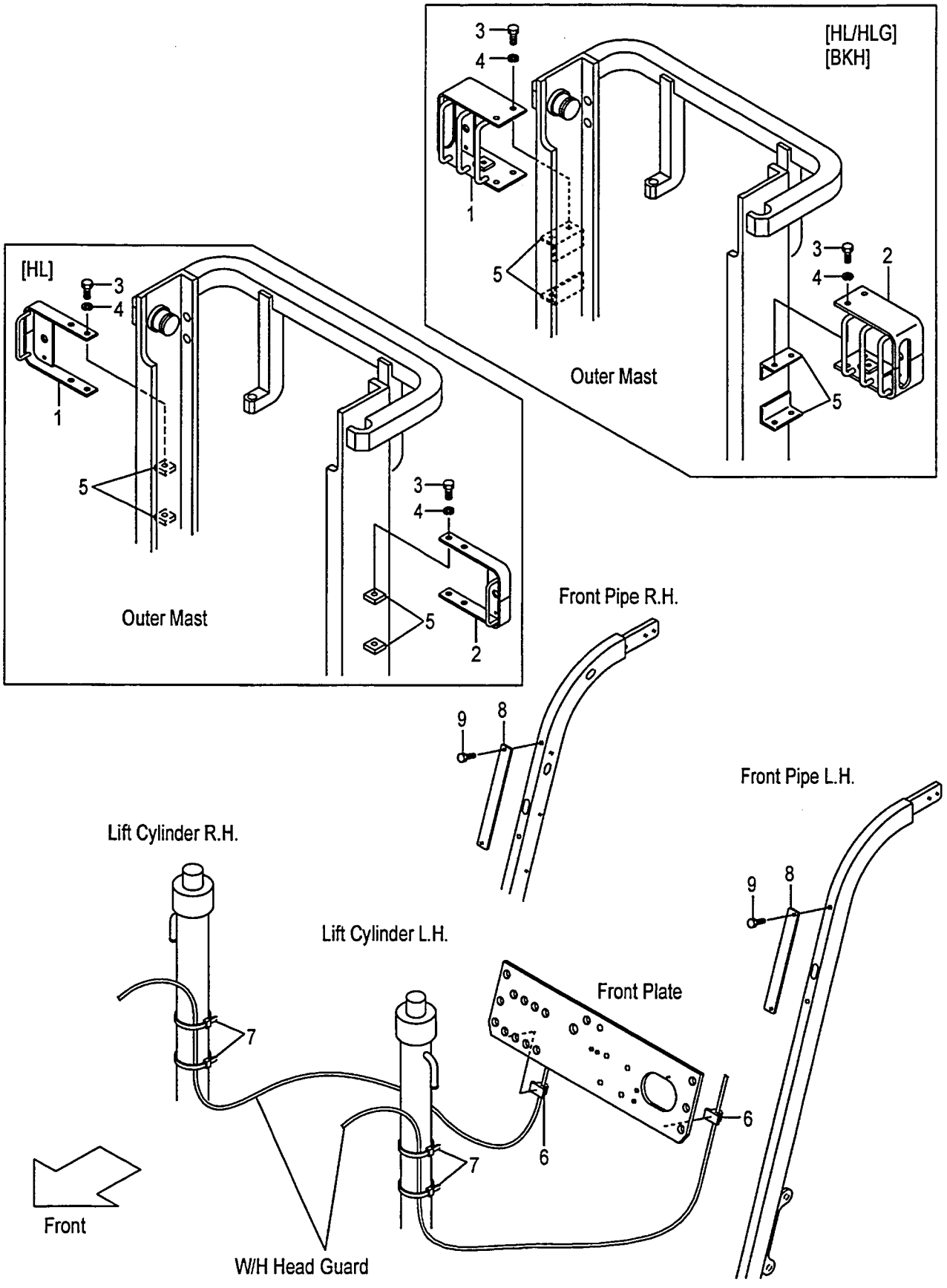

A:FD10C12 FD10T12 FD15C12 FD15T12 FD18C12 FD18T12

Item No	Part No.	Mark	Description	Req'd	Remarks : Serial No.
1	534A9-22001		BRACKET,HEAD-LAMP,RH ﾌﾞﾗｹｯﾄ	1	[HL]
-	534A4-22001		BRACKET,HEAD-LAMP,RH ﾌﾞﾗｹｯﾄ	1	[HL/HLG][BKH]
2	534A9-22011		BRACKET,HEAD-LAMP,LH ﾌﾞﾗｹｯﾄ	1	[HL]
-	534A4-22011		BRACKET,HEAD-LAMP,LH ﾌﾞﾗｹｯﾄ	1	[HL/HLG][BKH]
3	01100-12020		BOLT ﾎﾞﾙﾄ	4	[HL][HL/HLG][BKH]
4	02010-00012		WASHER ﾜｯｼｬ	4	[HL][HL/HLG][BKH]
5	534A9-22101		PLATE,TAPPED ﾌﾟﾚｰﾄ	4	[HL]
-	534A4-22101		BRACKET ﾌﾞﾗｹｯﾄ	4	[HL/HLG][BKH]
6	27732-42221		CLAMP,HARNESS ｸﾗﾝﾌﾟ	2	[HL][HL/HLG][BKH]
7	04913-11380		BAND,INSHULOCK ﾊﾞﾝﾄﾞ	4	[HL][HL/HLG][BKH]
8	534A9-22301		PLATE ﾌﾟﾚｰﾄ	2	[HL][HL/HLG][BKH]
9	01183-08016		BOLT ﾎﾞﾙﾄ	4	[HL][HL/HLG][BKH]

FIG.101 REAR LAMP BRACKET

(F6015160) リヤーランプブラケット

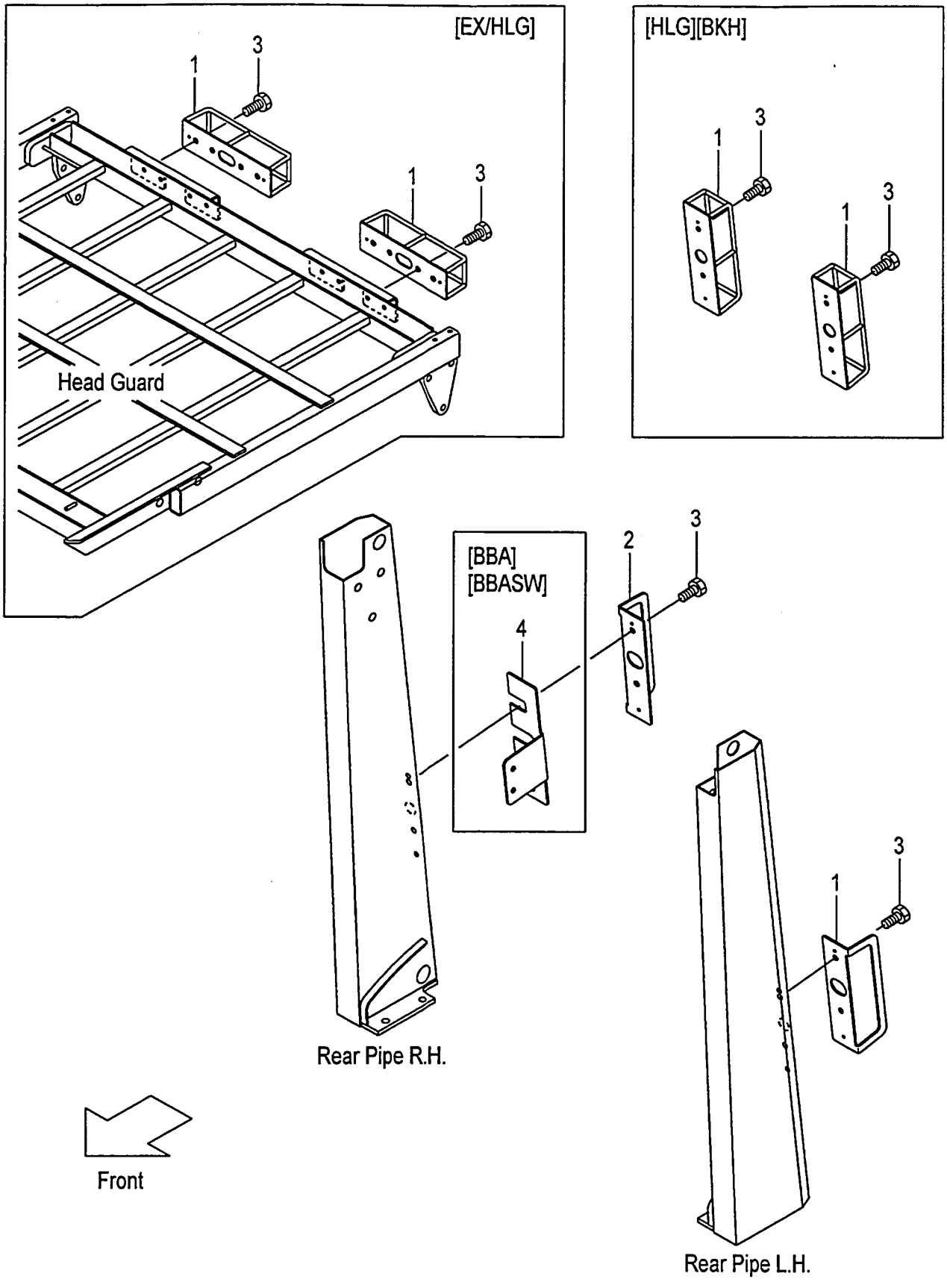

A:FD10C12 FD10T12 FD15C12 FD15T12 FD18C12 FD18T12

Item No	Part No.	Mark	Description		Req'd	Remarks : Serial No.
1	534A5-12321		GUARD,REAR-LAMP,LH	ｶﾞｰﾄﾞ	1	(WITHOUT EX)
-	524W5-13351		GUARD,REAR-LAMP	ｶﾞｰﾄﾞ	2	[HLG][BKH]
-	539A5-12101		GUARD,REAR-LAMP	ｶﾞｰﾄﾞ	2	[EX/HLG]
2	534A5-12331		GUARD,REAR-LAMP,RH	ｶﾞｰﾄﾞ	1	(WITHOUT EX,HLG,BKH)
3	01183-08016		BOLT	ﾎﾞﾙﾄ	4	(WITHOUT EX)
-	01183-08016		BOLT	ﾎﾞﾙﾄ	8	[EX/HLG]
4	539A1-32001		BRACKET	ﾌﾞﾗｹｯﾄ	1	[BBA][BBASW]

FIG.102 HEAD GUARD PARTS

(F6015170) ﾍｯﾄﾞｶﾞｰﾄﾞﾊﾟｰﾂ

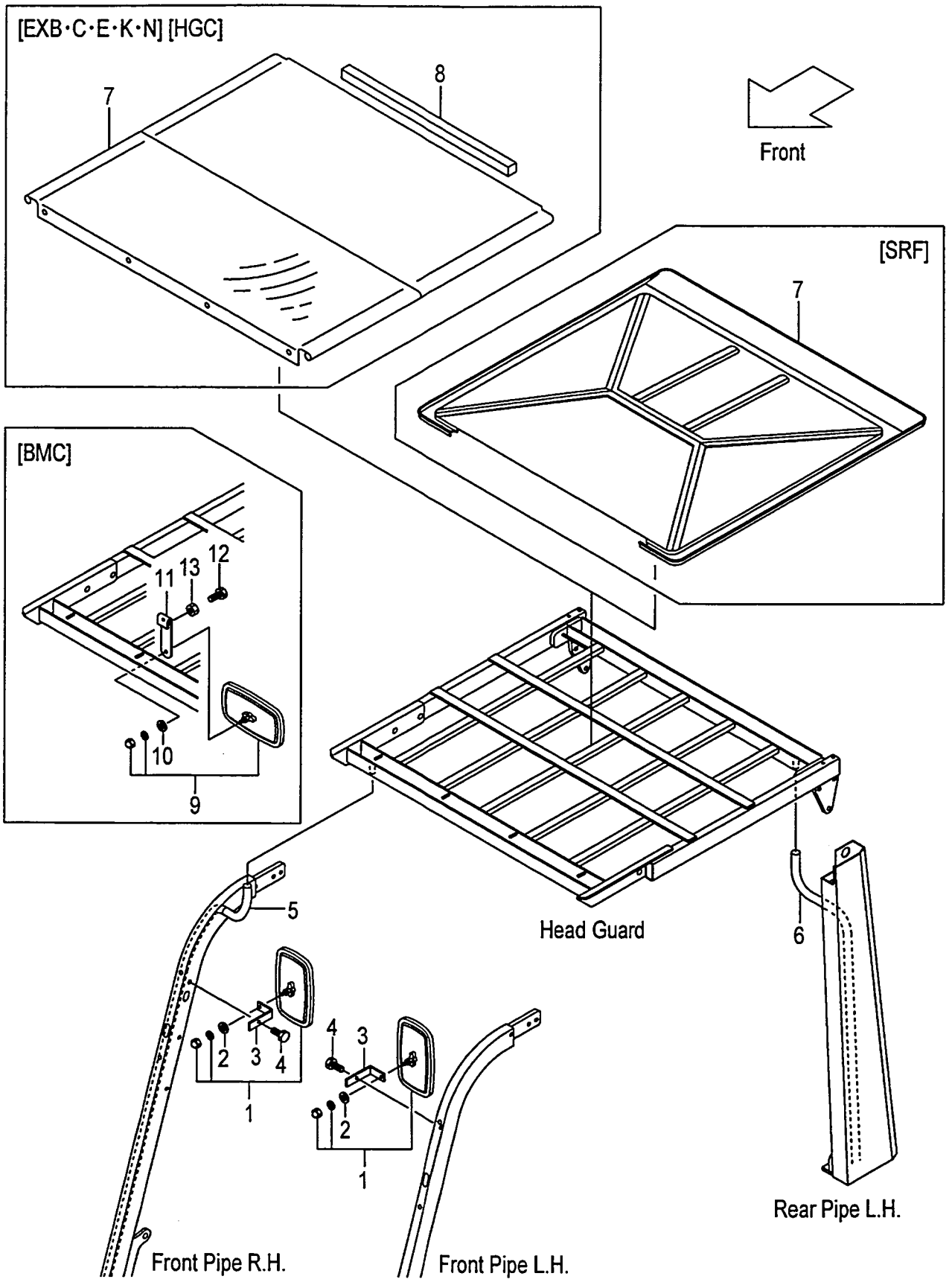

A:FD10C12 FD10T12 FD15C12 FD15T12 FD18C12 FD18T12

Item No	Part No.	Mark	Description		Req'd	Remarks : Serial No.
1	239A9-92001		MIRROR	ミラー	2	
2	222A9-32011		WASHER	ワッシャ	2	
3	534A5-12571		BRACKET,BACK-MIRROR	ブラケット	2	
4	514A5-12021		BOLT	ボルト	2	
5	516M5-12301		HOSE,VINYL	ホース	1	
-	516M5-12311		HOSE,VINYL	ホース	1	[EXB][EXC][EXE][EXK][HGH]
-	534A5-00411		HOSE,VINYL	ホース	1	[EXN][HGH060]
-	516M5-12301		HOSE,VINYL	ホース	1	[HGL/EXB&C&E&K&N]
-	534A5-00411		HOSE,VINYL	ホース	1	[HGH100][HGH100/EXB&C&E&N&K]
-	577H5-13051		HOSE,VINYL	ホース	1	[HGH200][HGH200/EXB&C&E&N&K]
6	516G5-12511		HOSE,VINYL	ホース	1	
-	534A5-00401		HOSE,VINYL	ホース	1	[EXB][EXC][EXE][EXK][HGH]
-	516M5-12311		HOSE,VINYL	ホース	1	[EXN][HGH060]
-	516G5-12511		HOSE,VINYL	ホース	1	[HGL/EXB&C&E&K&N]
-	516M5-12311		HOSE,VINYL	ホース	1	[HGH100][HGH100/EXB&C&E&N&K]
-	577H5-13051		HOSE,VINYL	ホース	1	[HGH200][HGH200/EXB&C&E&N&K]
7	539A5-12001		CANVAS	キャンバス	1	[EXB][EXC][EXE][EXK][EXN] (WITHOUT HGCZZZ/EX)
-	539A5-10501		ROOF,SUN	ルーフ	1	[SRF]
-	539A5-12001		CANVAS	キャンバス	1	[HGC]
8	516G5-13511		SUPPORTER	サポータ	1	[EXB][EXC][EXE][EXK][EXN] (WITHOUT HGCZZZ/EX)
-	516G5-13511		SUPPORTER	サポータ	1	[HGC]
9	239A9-92001		MIRROR	ミラー	1	[BMC]
10	222A9-32011		WASHER	ワッシャ	1	[BMC]
11	539A9-32001		BRACKET,BACK-MIRROR	ブラケット	1	[BMC]
12	01100-08025		BOLT	ボルト	2	[BMC]
13	01402-00008		NUT	ナット	2	[BMC]

FIG.103 ACCEL PEDAL

(F6015220) アクセルペダル

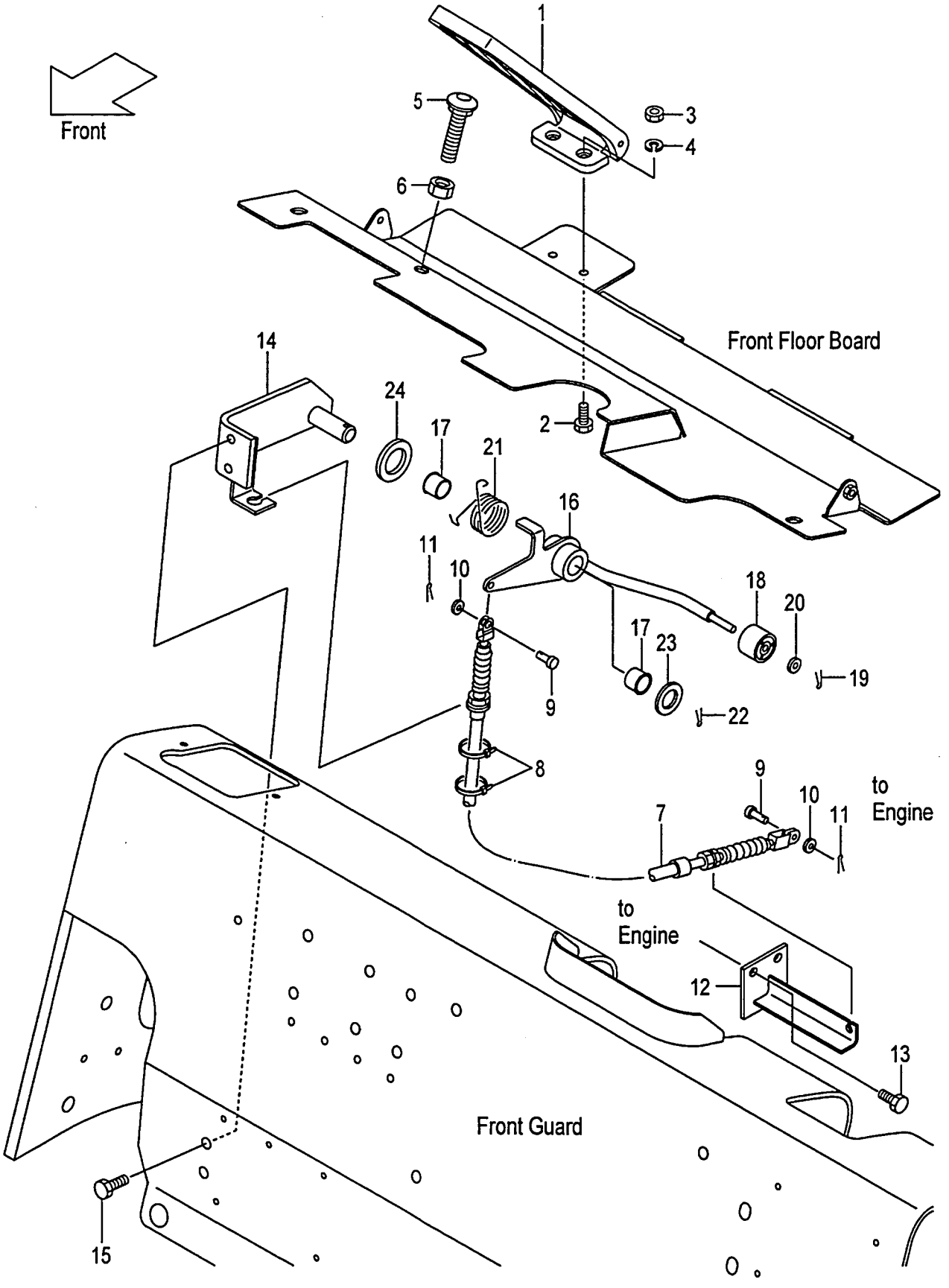

A:FD10C12 FD10T12 FD15C12 FD15T12 FD18C12 FD18T12

Item No	Part No.	Mark	Description		Req'd	Remarks : Serial No.
1	214A5-22051		PEDAL,ACCEL	ﾍﾟﾀﾞﾙ	1	
2	01100-06012		BOLT	ﾎﾞﾙﾄ	2	
3	01400-00006		NUT	ﾅｯﾄ	2	
4	02010-00006		WASHER	ﾜｯｼｬ	2	
5	216G5-22101		BOLT,CAP-SQUARE-NECK	ﾎﾞﾙﾄ	1	
6	01400-00012		NUT	ﾅｯﾄ	1	
7	239A5-22101		WIRE,ACCEL	ﾜｲﾔ	1	
8	27042-42312		BAND,CABLE	ﾊﾞﾝﾄﾞ	2	
9	02262-06015		PIN,CLEVIS	ﾋﾟﾝ	2	
10	02000-00006		WASHER	ﾜｯｼｬ	2	
11	02200-06015		PIN,COTTER	ﾋﾟﾝ	2	
12	241G5-22001		BRACKET,ACCEL-CABLE	ﾌﾞﾗｹｯﾄ	1	
13	01186-08020		BOLT	ﾎﾞﾙﾄ	2	
14	239A5-20402		BRACKET,ACCEL-LINK	ﾌﾞﾗｹｯﾄ	1	
15	01183-08016		BOLT	ﾎﾞﾙﾄ	2	
A1	239A5-20302		LINK-ASSY,ACCEL	ｱｸｾﾙﾘﾝｸｱｯｾﾝ	1	INC.16-20
16	NO PART NO.	#	LINK,ACCEL	ﾘﾝｸ	1	
17	214A7-42071		BUSHING	ﾌﾞｯｼﾝｸﾞ	2	
18	214A5-22001		ROLLER	ﾛｰﾗ	1	
19	02200-16010		PIN,COTTER	ﾋﾟﾝ	1	
20	02000-00006		WASHER	ﾜｯｼｬ	1	
21	239A5-22253		SPRING	ｽﾌﾟﾘﾝｸﾞ	1	
22	02200-04025		PIN,COTTER	ﾋﾟﾝ	1	
23	02000-00016		WASHER	ﾜｯｼｬ	1	
24	239A5-22151		WASHER	ﾜｯｼｬ	1	

FIG.104 FOOT PEDAL (CLUTCH)

(F6015410) フットペダル

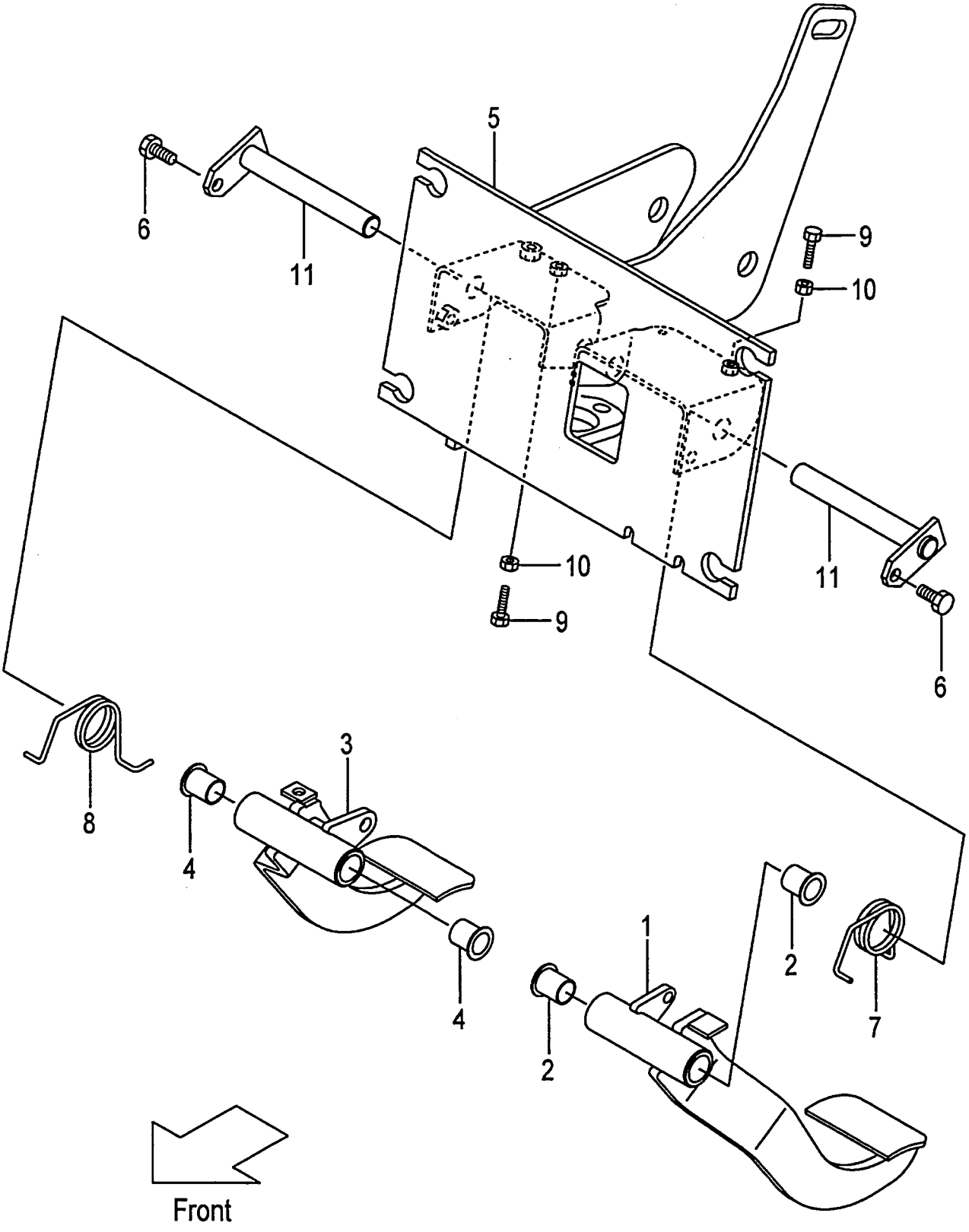

A:FD10C12 FD15C12 FD18C12

Item No	Part No.	Mark	Description		Req'd	Remarks : Serial No.
A1	238F5-40071		PEDAL-ASSY,CLUTCH	ｸﾗｯﾁﾍﾟﾀﾞﾙｱｯｾﾝ	1	INC.1,2
1	NO PART NO.	#	PEDAL,CLUTCH	ﾍﾟﾀﾞﾙ	1	
2	239B5-42221		BUSHING	ﾌﾞｯｼﾝｸﾞ	2	
A2	238F5-40061		PEDAL-ASSY,BRAKE	ﾌﾞﾚｰｷﾍﾟﾀﾞﾙｱｯｾﾝ	1	INC.3,4
3	NO PART NO.	#	PEDAL,BRAKE	ﾍﾟﾀﾞﾙ	1	
4	239B5-42221		BUSHING	ﾌﾞｯｼﾝｸﾞ	2	
5	238F5-40202		BRACKET,PEDAL	ﾌﾞﾗｹｯﾄ	1	
6	01186-08016		BOLT	ﾎﾞﾙﾄ	2	
7	239B5-42201		SPRING	ｽﾌﾟﾘﾝｸﾞ	1	
8	239B5-42211		SPRING	ｽﾌﾟﾘﾝｸﾞ	1	
9	01120-08035		BOLT	ﾎﾞﾙﾄ	2	
10	01402-00008		NUT	ﾅｯﾄ	2	
11	238F5-40501		SHAFT	ｼｬﾌﾄ	2	

FIG.105 FOOT PEDAL (CLUTCH):[PC]

(F60154A0) ﾌｯﾄﾍﾟﾀﾞﾙ

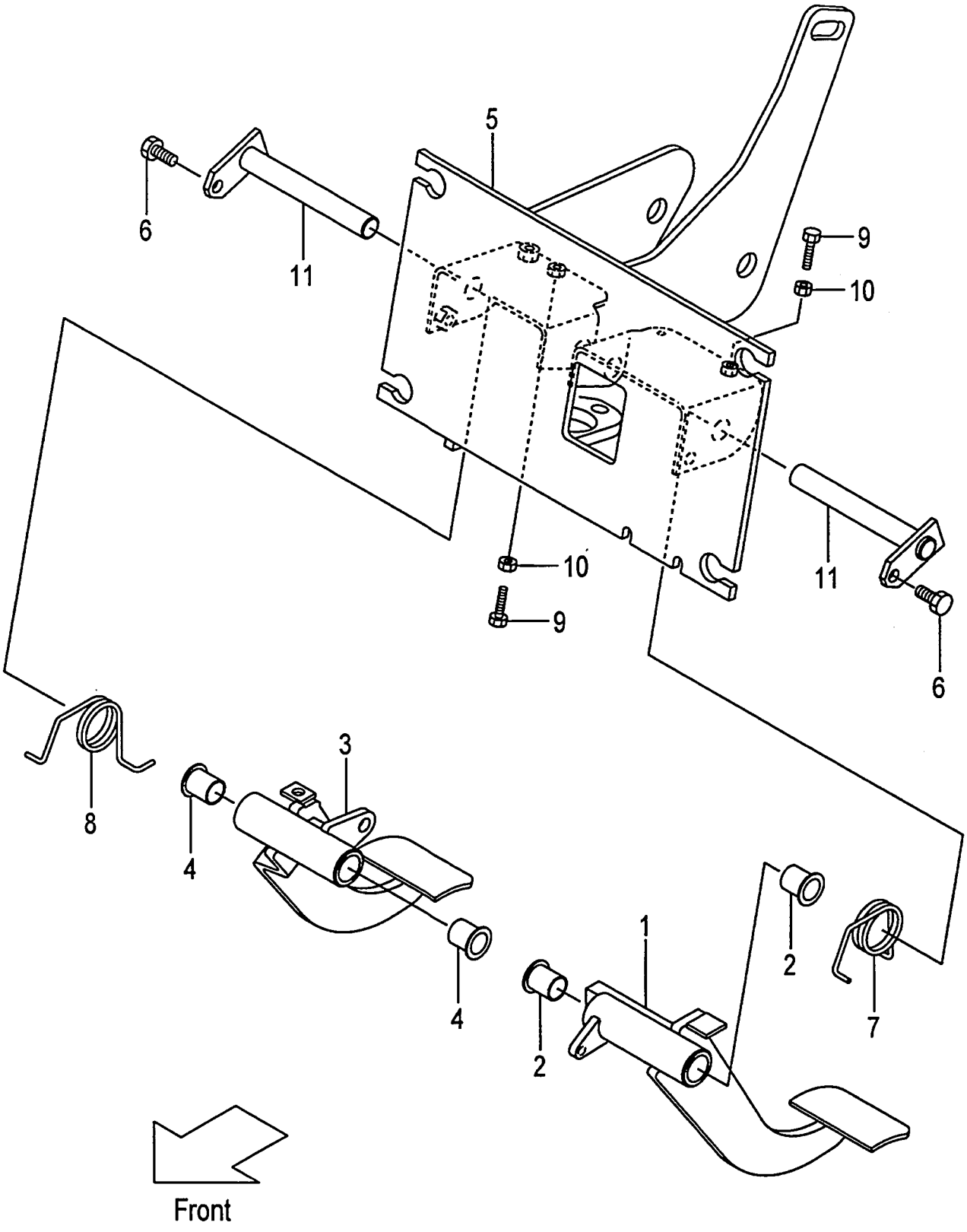

A:FD10C12 FD15C12 FD18C12

Item No	Part No.	Mark	Description		Req'd	Remarks : Serial No.
A1	239H5-40411		PEDAL-ASSY,INCHING	ｲﾝﾁﾝｸﾞﾍﾟﾀﾞﾙｱｯｾﾝ	1	[PC] INC.1,2
1	NO PART NO.	#	PEDAL,INCHING	ﾍﾟﾀﾞﾙ	1	[PC]
2	239B5-42221		BUSHING	ﾌﾞｯｼﾝｸﾞ	2	[PC]
A2	238F5-40061		PEDAL-ASSY,BRAKE	ﾌﾞﾚｰｷﾍﾟﾀﾞﾙｱｯｾﾝ	1	[PC] INC.3,4
3	NO PART NO.	#	PEDAL,BRAKE	ﾍﾟﾀﾞﾙ	1	[PC]
4	239B5-42221		BUSHING	ﾌﾞｯｼﾝｸﾞ	2	[PC]
5	238S5-40202		BRACKET,PEDAL	ﾌﾞﾗｹｯﾄ	1	[PC]
6	01186-08016		BOLT	ﾎﾞﾙﾄ	2	[PC]
7	239B5-42201		SPRING	ｽﾌﾟﾘﾝｸﾞ	1	[PC]
8	239B5-42211		SPRING	ｽﾌﾟﾘﾝｸﾞ	1	[PC]
9	01120-08035		BOLT	ﾎﾞﾙﾄ	2	[PC]
10	01402-00008		NUT	ﾅｯﾄ	2	[PC]
11	238F5-40501		SHAFT	ｼｬﾌﾄ	2	[PC]

FIG.106 FOOT PEDAL (TOR-CON)

(F6015420) ﾌｯﾄﾍﾟﾀﾞﾙ

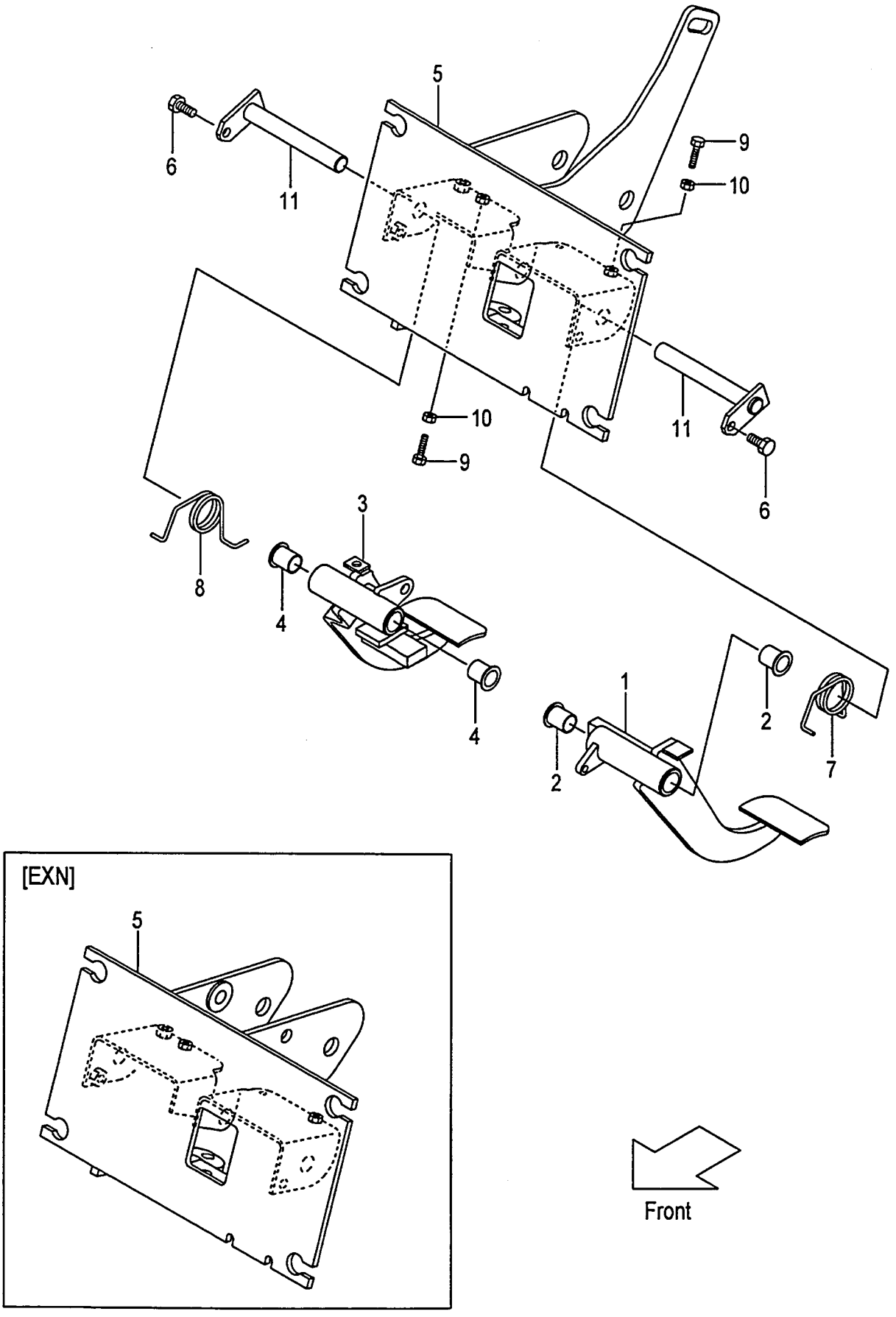

A:FD10T12 FD15T12 FD18T12

Item No	Part No.	Mark	Description		Req'd	Remarks : Serial No.
A1	238G5-40031		PEDAL-ASSY,INCHING	ｲﾝﾁﾝｸﾞﾍﾟﾀﾞﾙｱｯｾﾝ	1	INC.1,2
1	NO PART NO.	#	PEDAL,INCHING	ﾍﾟﾀﾞﾙ	1	
2	239B5-42221		BUSHING	ﾌﾞｯｼﾝｸﾞ	2	
A2	238G5-40021		PEDAL-ASSY,BRAKE	ﾌﾞﾚｰｷﾍﾟﾀﾞﾙｱｯｾﾝ	1	INC.3,4
3	NO PART NO.	#	PEDAL,BRAKE	ﾍﾟﾀﾞﾙ	1	
4	239B5-42221		BUSHING	ﾌﾞｯｼﾝｸﾞ	2	
5	238G5-40202		BRACKET,PEDAL	ﾌﾞﾗｹｯﾄ	1	
-	538G2-60202		BRACKET,PEDAL	ﾌﾞﾗｹｯﾄ	1	[EXN]
6	01186-08016		BOLT	ﾎﾞﾙﾄ	2	
7	239B5-42201		SPRING	ｽﾌﾟﾘﾝｸﾞ	1	
8	239B5-42211		SPRING	ｽﾌﾟﾘﾝｸﾞ	1	
9	01120-08035		BOLT	ﾎﾞﾙﾄ	2	
10	01402-00008		NUT	ﾅｯﾄ	2	
11	238F5-40501		SHAFT	ｼｬﾌﾄ	2	

FIG.107 FOOT PEDAL CYLINDER (CLUTCH)

(F6015430) ﾌｯﾄﾍﾟﾀﾞﾙｼﾘﾝﾀﾞ

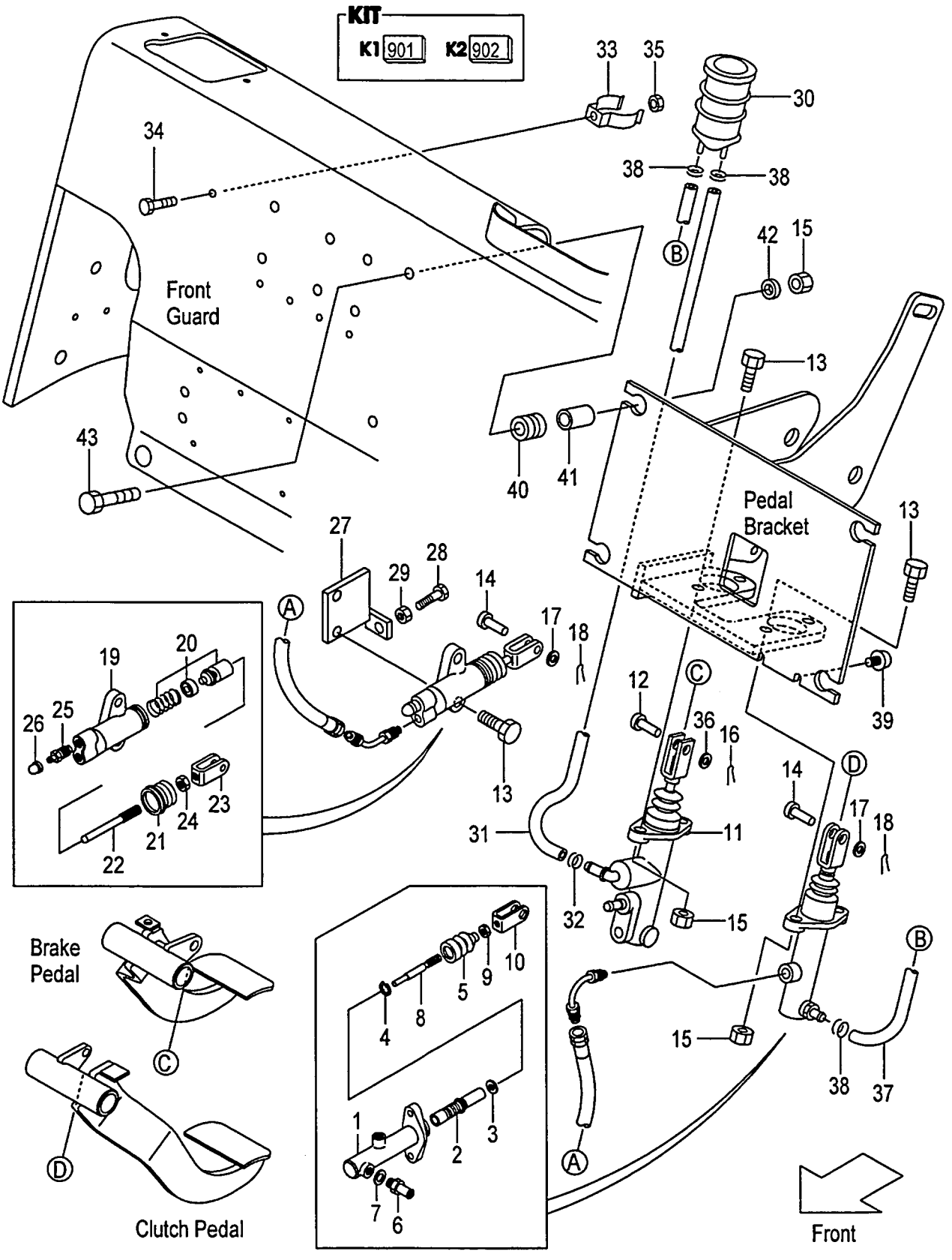

A:FD10C12 FD15C12 FD18C12

Item No	Part No.	Mark	Description		Req'd	Remarks : Serial No.
A1	239A5-40501		CYL-ASSY,CLUTCH-MASTER		1	INC.1-10
				ｼﾘﾝﾀﾞｱｯｾﾝ		
901	216G5-32201	K1	KIT,REPAIR	ﾘﾍﾟｱｷｯﾄ	1	INC.2-5
1	NO PART NO.	#	BODY,CYL	ﾎﾞﾃﾞｨ	1	
2	NO PART NO.	#*	PISTON	ﾋﾟｽﾄﾝ	1	
3	216G5-32311	*	PLATE,PISTON-STOPPER	ﾌﾟﾚｰﾄ	1	
4	25595-42311	*	RING,SNAP	ｽﾅｯﾌﾟﾘﾝｸﾞ	1	
5	216G5-32321	*	BOOT	ﾌﾞｰﾂ	1	
6	216G5-32331		UNION	ﾕﾆｵﾝ	1	
7	216G5-32341		GASKET	ｶﾞｽｹｯﾄ	1	
8	NO PART NO.	#	ROD,PUSH	ﾛｯﾄﾞ	1	
9	01402-00008		NUT	ﾅｯﾄ	1	
10	25595-42452		CLEVIS	ｸﾚﾋﾞｽ	1	
11	239A5-40102		CYL,BRAKE-MASTER	ｼﾘﾝﾀﾞ	1	SEE FIG.114
12	02262-10030		PIN,CLEVIS	ﾋﾟﾝ	1	
13	01184-10030		BOLT	ﾎﾞﾙﾄ	6	
14	02262-08025		PIN,CLEVIS	ﾋﾟﾝ	2	
15	01400-00010		NUT	ﾅｯﾄ	8	
16	02200-32025		PIN,COTTER	ﾋﾟﾝ	1	
17	02000-00008		WASHER	ﾜｯｼｬ	2	
18	02200-02020		PIN,COTTER	ﾋﾟﾝ	2	
A2	214A5-32312		CYL-ASSY,CLUTCH-RELEASE		1	INC.19-26
				ｼﾘﾝﾀﾞｱｯｾﾝ		
902	214A5-33012	K2	KIT,REPAIR	ﾘﾍﾟｱｷｯﾄ	1	INC.20,21
19	NO PART NO.	#	BODY,CYL	ﾎﾞﾃﾞｨ	1	
20	NO PART NO.	#*	PISTON	ﾋﾟｽﾄﾝ	1	
21	NO PART NO.	#*	BOOT	ﾌﾞｰﾂ	1	
A3	214A5-33052		ROD-ASSY,PUSH	ﾌﾟｯｼｭﾛｯﾄﾞｱｯｾﾝ	1	INC.22-24
22	214A5-33062		ROD,PUSH	ﾛｯﾄﾞ	1	
23	25595-42452		CLEVIS	ｸﾚﾋﾞｽ	1	
24	01402-00008		NUT	ﾅｯﾄ	1	
25	214A5-33031		VALVE,BLEEDER	ﾊﾞﾙﾌﾞ	1	
26	214A5-33041		CAP,BLEEDER	ｷｬｯﾌﾟ	1	
27	214A5-32101		BRACKET,RELEASE-CYL	ﾌﾞﾗｹｯﾄ	1	
28	01100-10030		BOLT	ﾎﾞﾙﾄ	1	
29	01402-00010		NUT	ﾅｯﾄ	1	
30	216G5-42011		TANK,RESERVE	ﾀﾝｸ	1	
31	239A5-42411		HOSE,RESERVE	ﾎｰｽ	1	
32	25595-42491		CLIP,HOSE	ｸﾘｯﾌﾟ	1	
33	224G5-42061		CLIP,RESERVE-TANK	ｸﾘｯﾌﾟ	1	
34	239A5-42381		BOLT	ﾎﾞﾙﾄ	1	
35	01400-00006		NUT	ﾅｯﾄ	1	
36	02000-00010		WASHER	ﾜｯｼｬ	1	
37	239A5-42401		HOSE,RESERVE	ﾎｰｽ	1	
38	25785-43091		CLIP,HOSE	ｸﾘｯﾌﾟ	3	
39	23456-42181		STOPPER	ｽﾄｯﾊﾟ	1	
40	238F5-42601		RUBBER,MOUNT	ﾗﾊﾞｰ	4	
41	216G7-32011		COLLAR	ｶﾗｰ	4	
42	22252-32251		WASHER	ﾜｯｼｬ	4	
43	216G6-43241		BOLT	ﾎﾞﾙﾄ	4	

FIG.108 FOOT PEDAL CYLINDER (CLUTCH):[PC]

(F60154C0) ﾌｯﾄﾍﾟﾀﾞﾙｼﾘﾝﾀﾞ

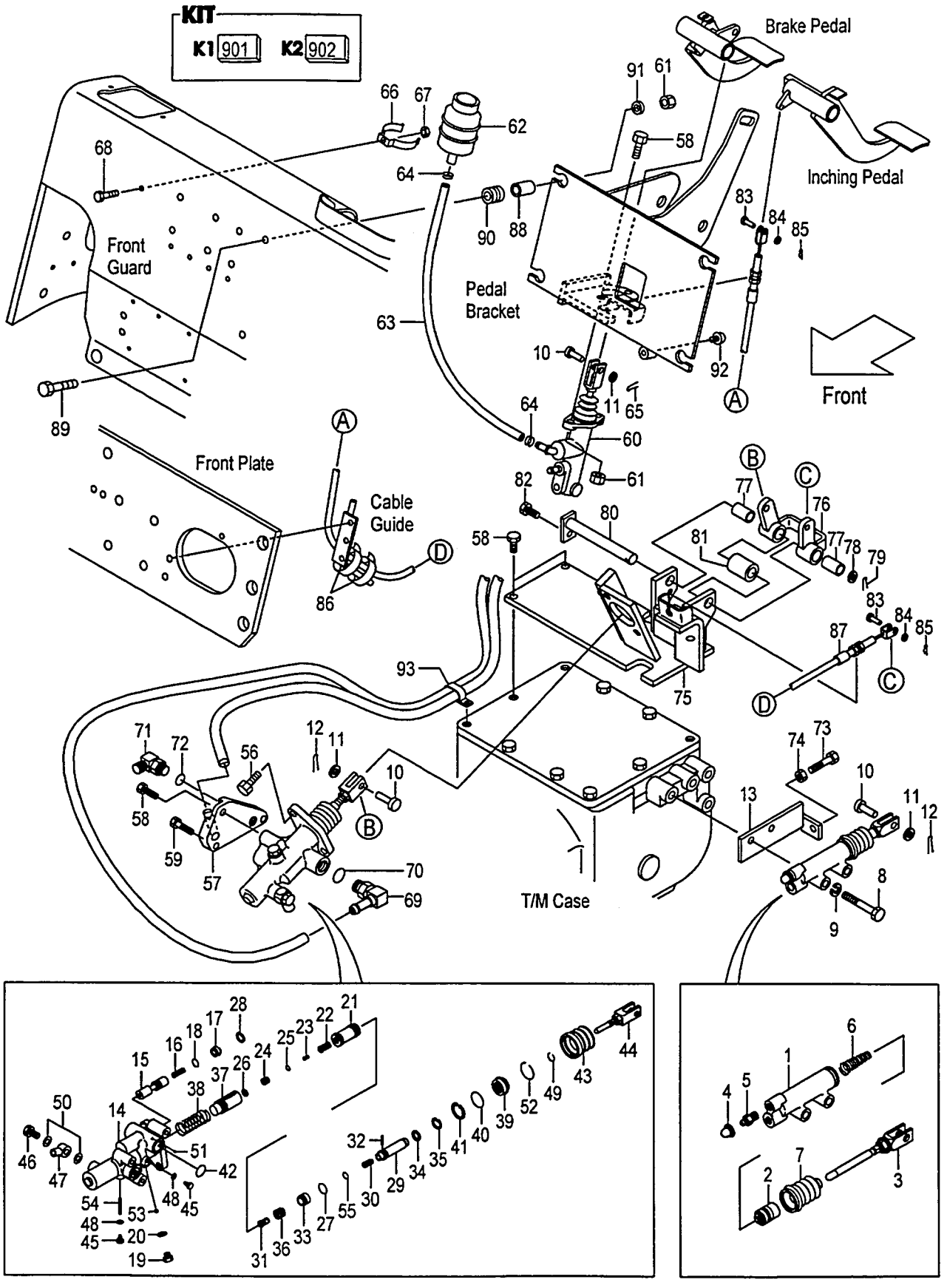

A:FD10C12 FD15C12 FD18C12

Item No	Part No.	Mark	Description		Req'd	Remarks : Serial No.
A1	522A2-10401		CYL-ASSY,CLUTCH-RELEASE	シリンダアッセン	1	[PC] INC.1-7
901	522A2-11601	K1	KIT,OVERHAUL	オーバホールキット	1	[PC] INC.2,4,6,7
1	NO PART NO.	#	BODY,CYL	ボディ	1	[PC]
2	522A2-18541	*	PISTON,RELEASE-CYL	ピストン	1	[PC]
3	522A2-18551		ROD,PUSH	ロッド	1	[PC]
4	522A2-18561	*	CAP,BLEEDER-PLUG	キャップ	1	[PC]
5	522A2-18571		PLUG,BLEEDER	プラグ	1	[PC]
6	522A2-18581	*	SPRING,CONICAL	スプリング	1	[PC]
7	522A2-18591	*	BOOT	ブーツ	1	[PC]
8	01103-10060		BOLT	ボルト	2	[PC]
9	02010-00010		WASHER	ワッシャ	2	[PC]
10	02262-10030		PIN,CLEVIS	ピン	3	[PC]
11	02000-00010		WASHER	ワッシャ	3	[PC]
12	02200-32020		PIN,COTTER	ピン	2	[PC]
13	214L5-32101		BRACKET,RELEASE-CYL	ブラケット	1	[PC]
A2	234H5-30201		BOOSTER-ASSY,CLUTCH	クラッチブースタアッセン	1	[PC] INC.14-55
902	234H5-32401	K2	KIT,OVERHAUL	オーバホールキット	1	[PC] INC.18,20,21,25-28,32,35, 37,39-43,48-55
14	NO PART NO.	#	BODY,BOOSTER	ボディ	1	[PC]
15	234H5-32411		SPOOL,FLOW-DIVIDER	スプール	1	[PC]
16	522A2-18011		SPRING,FLOW-DIVIDER	スプリング	1	[PC]
17	522A2-18021		PLUG	プラグ	1	[PC]
18	522A2-18031	*	O-RING	Oリング	1	[PC]
19	522A2-18041		PLUG	プラグ	1	[PC]
20	522A2-18051	*	GASKET	ガスケット	1	[PC]
21	522A2-18061	*	PISTON,POWER	ピストン	1	[PC]
22	522A2-18071		VALVE,CONTROL	バルブ	1	[PC]
23	522A2-18081		SPRING,CONTROL-VALVE	スプリング	1	[PC]
24	522A2-18091		PLUG,PISTON	プラグ	1	[PC]
25	522A2-18101	*	O-RING	Oリング	1	[PC]
26	522A2-18111	*	RING,SNAP	スナップリング	1	[PC]
27	522A2-18121	*	O-RING	Oリング	1	[PC]
28	522A2-18131	*	RING,SNAP	スナップリング	1	[PC]
29	234H5-32421		PISTON,REACTION	ピストン	1	[PC]
30	224W5-32421		SPRING,RELIEF-VALVE	スプリング	1	[PC]
31	522A2-18161		SEAT,CONTROL-VALVE	シート	1	[PC]
32	522A2-18171	*	PIN	ピン	1	[PC]
33	234H5-32431		PISTON,REACTION	ピストン	1	[PC]
34	522A2-18201		WASHER	ワッシャ	1	[PC]
35	522A2-18211	*	RING,SNAP	スナップリング	1	[PC]
36	522A2-18221		SPRING,RETURN,VALVE	スプリング	1	[PC]
37	522A2-18231	*	PISTON,MASTER-CYL	ピストン	1	[PC]
38	522A2-18241		SPRING,RETURN,PISTON	スプリング	1	[PC]
39	522A2-18251	*	GUIDE,REACTION	ガイド	1	[PC]
40	522A2-18261	*	O-RING	Oリング	1	[PC]
41	522A2-18271	*	RING,SNAP	スナップリング	1	[PC]

FIG.108 FOOT PEDAL CYLINDER (CLUTCH):[PC]

(F60154C0) ﾌｯﾄﾍﾟﾀﾞﾙｼﾘﾝﾀﾞ

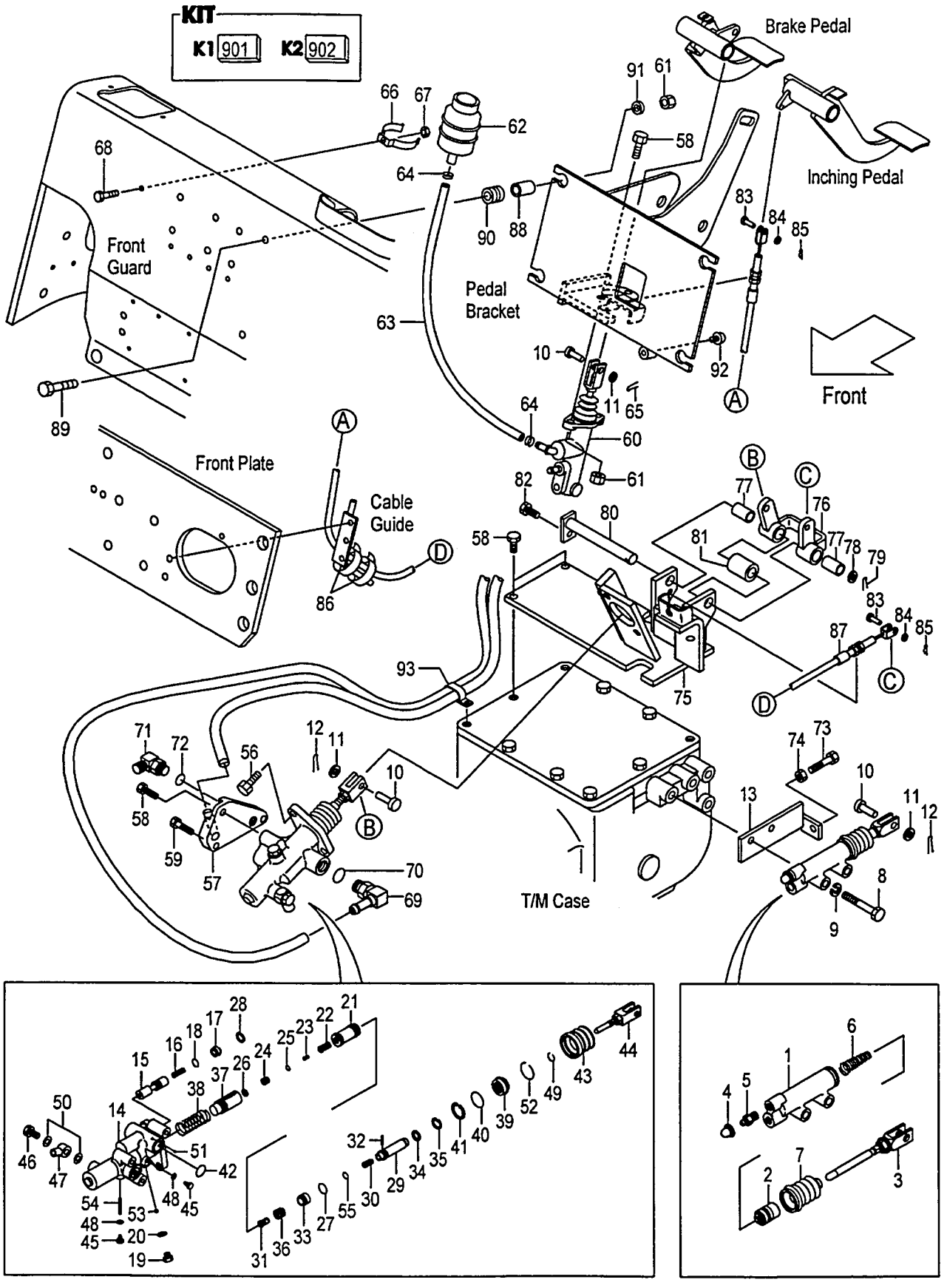

A:FD10C12 FD15C12 FD18C12

Item No	Part No.	Mark	Description		Req'd	Remarks : Serial No.
42	522A2-18281	*	O-RING	Oﾘﾝｸﾞ	2	[PC]
43	522A2-18291	*	BOOT	ﾌﾞｰﾂ	1	[PC]
44	522A2-18301		ROD,PUSH	ﾛｯﾄﾞ	1	[PC]
45	522A2-18311		BOLT	ﾎﾞﾙﾄ	2	[PC]
46	522A2-18341		BOLT,UNION	ﾎﾞﾙﾄ	1	[PC]
47	522A2-18352		UNION	ﾕﾆｵﾝ	1	[PC]
48	522A2-18321	*	GASKET	ｶﾞｽｹｯﾄ	2	[PC]
49	522A2-18331	*	RING,SNAP	ｽﾅｯﾌﾟﾘﾝｸﾞ	1	[PC]
50	522A2-18361	*	GASKET	ｶﾞｽｹｯﾄ	2	[PC]
51	522A2-18371	*	BALL	ﾎﾞｰﾙ	1	[PC]
52	522A2-18381	*	RING,SNAP	ｽﾅｯﾌﾟﾘﾝｸﾞ	1	[PC]
53	522A2-18391	*	BALL	ﾎﾞｰﾙ	1	[PC]
54	522A2-18401	*	PIN	ﾋﾟﾝ	1	[PC]
55	234H5-32441	*	O-RING	Oﾘﾝｸﾞ	1	[PC]
56	01184-10025		BOLT	ﾎﾞﾙﾄ	2	[PC]
57	524G2-12151		ADAPTER	ｱﾀﾞﾌﾟﾀ	1	[PC]
58	01184-10030		BOLT	ﾎﾞﾙﾄ	6	[PC]
59	01184-10055		BOLT	ﾎﾞﾙﾄ	2	[PC]
60	239A5-40102		CYL,BRAKE-MASTER	ｼﾘﾝﾀﾞ	1	[PC]SEE FIG.114
61	01400-00010		NUT	ﾅｯﾄ	6	[PC]
62	23775-42101		TANK,RESERVE	ﾀﾝｸ	1	[PC]
63	22655-42591		HOSE,RESERVE	ﾎｰｽ	1	[PC]
64	25595-42491		CLIP,HOSE	ｸﾘｯﾌﾟ	2	[PC]
65	02200-32025		PIN,COTTER	ﾋﾟﾝ	1	[PC]
66	224G5-42061		CLIP,RESERVE-TANK	ｸﾘｯﾌﾟ	1	[PC]
67	01400-00006		NUT	ﾅｯﾄ	1	[PC]
68	239A5-42381		BOLT	ﾎﾞﾙﾄ	1	[PC]
A3	224W7-60311		FITTING-ASSY,HOSE	ﾎｰｽﾌｨｯﾃｨﾝｸﾞｱｯｾﾝ	1	[PC] INC.69,70
69	NO PART NO.	#	FITTING,HOSE	ﾌｨｯﾃｨﾝｸﾞ	1	[PC]
70	89140-00006		O-RING	Oﾘﾝｸﾞ	1	[PC]
A4	04150-20202		ELBOW-ASSY	ｴﾙﾎﾞｱｯｾﾝ	1	[PC] INC.71,72
71	NO PART NO.	#	ELBOW	ｴﾙﾎﾞ	1	[PC]
72	03320-00110		O-RING	Oﾘﾝｸﾞ	1	[PC]
73	01100-10030		BOLT	ﾎﾞﾙﾄ	1	[PC]
74	01402-00010		NUT	ﾅｯﾄ	1	[PC]
A5	219S5-40301		BRACKET-ASSY,BOOSTER	ﾌﾞﾗｹｯﾄｱｯｾﾝ	1	[PC] INC.75-82
75	219S5-40201		BRACKET,BOOSTER	ﾌﾞﾗｹｯﾄ	1	[PC]
A6	239H5-40211		LINK-ASSY	ﾘﾝｸｱｯｾﾝ	1	[PC] INC.76,77
76	239H5-42301		LINK	ﾘﾝｸ	1	[PC]
77	256C7-42281		BUSHING	ﾌﾞｯｼﾝｸﾞ	2	[PC]
78	02000-00016		WASHER	ﾜｯｼｬ	1	[PC]
79	02200-04025		PIN,COTTER	ﾋﾟﾝ	1	[PC]
80	239H5-40311		SHAFT	ｼｬﾌﾄ	1	[PC]
81	239H5-42371		SPACER	ｽﾍﾟｰｻ	1	[PC]
82	01183-08016		BOLT	ﾎﾞﾙﾄ	1	[PC]
83	02262-08020		PIN,CLEVIS	ﾋﾟﾝ	2	[PC]
84	02000-00008		WASHER	ﾜｯｼｬ	2	[PC]
85	02200-02016		PIN,COTTER	ﾋﾟﾝ	2	[PC]

FIG.108 FOOT PEDAL CYLINDER (CLUTCH):[PC]

(F60154C0) ﾌｯﾄﾍﾟﾀﾞﾙｼﾘﾝﾀﾞ

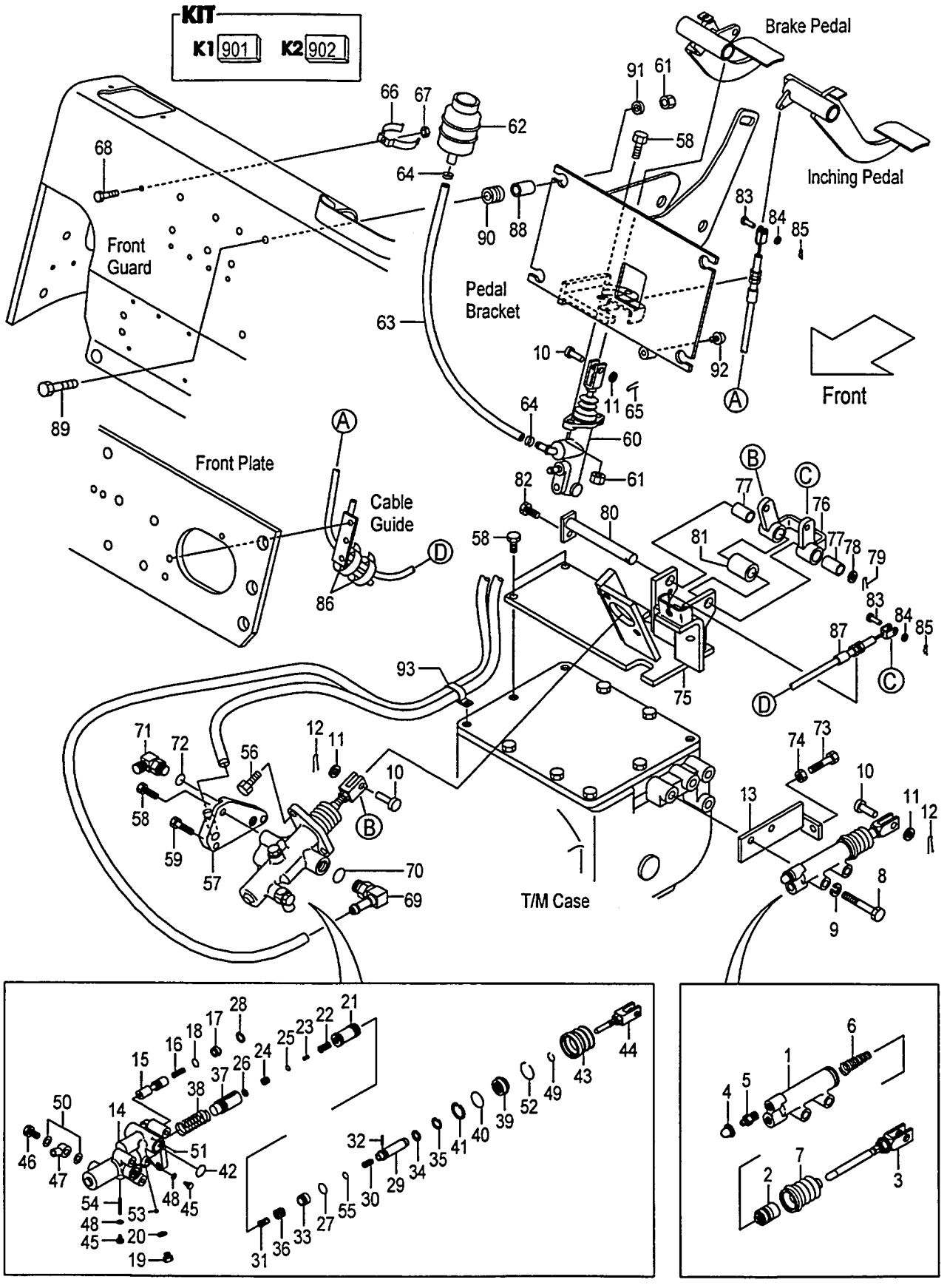

A:FD10C12 FD15C12 FD18C12

Item No	Part No.	Mark	Description		Req'd	Remarks : Serial No.
86	04913-11200		BAND	ﾊﾞﾝﾄﾞ	2	[PC]
87	239H5-42451		CABLE,INCHING	ｹｰﾌﾞﾙ	1	[PC]
88	216G7-32011		COLLAR	ｶﾗｰ	4	[PC]
89	216G6-43241		BOLT	ﾎﾞﾙﾄ	4	[PC]
90	238F5-42601		RUBBER,MOUNT	ﾗﾊﾞｰ	4	[PC]
91	22252-32251		WASHER	ﾜｯｼｬ	4	[PC]
92	23456-42181		STOPPER	ｽﾄｯﾊﾟ	1	[PC]
93	214A2-42331		CLIP	ｸﾘｯﾌﾟ	1	[PC]

FIG.109 FOOT PEDAL CYLINDER (TOR-CON)

(F6015440) ﾌｯﾄﾍﾟﾀﾞﾙｼﾘﾝﾀﾞ

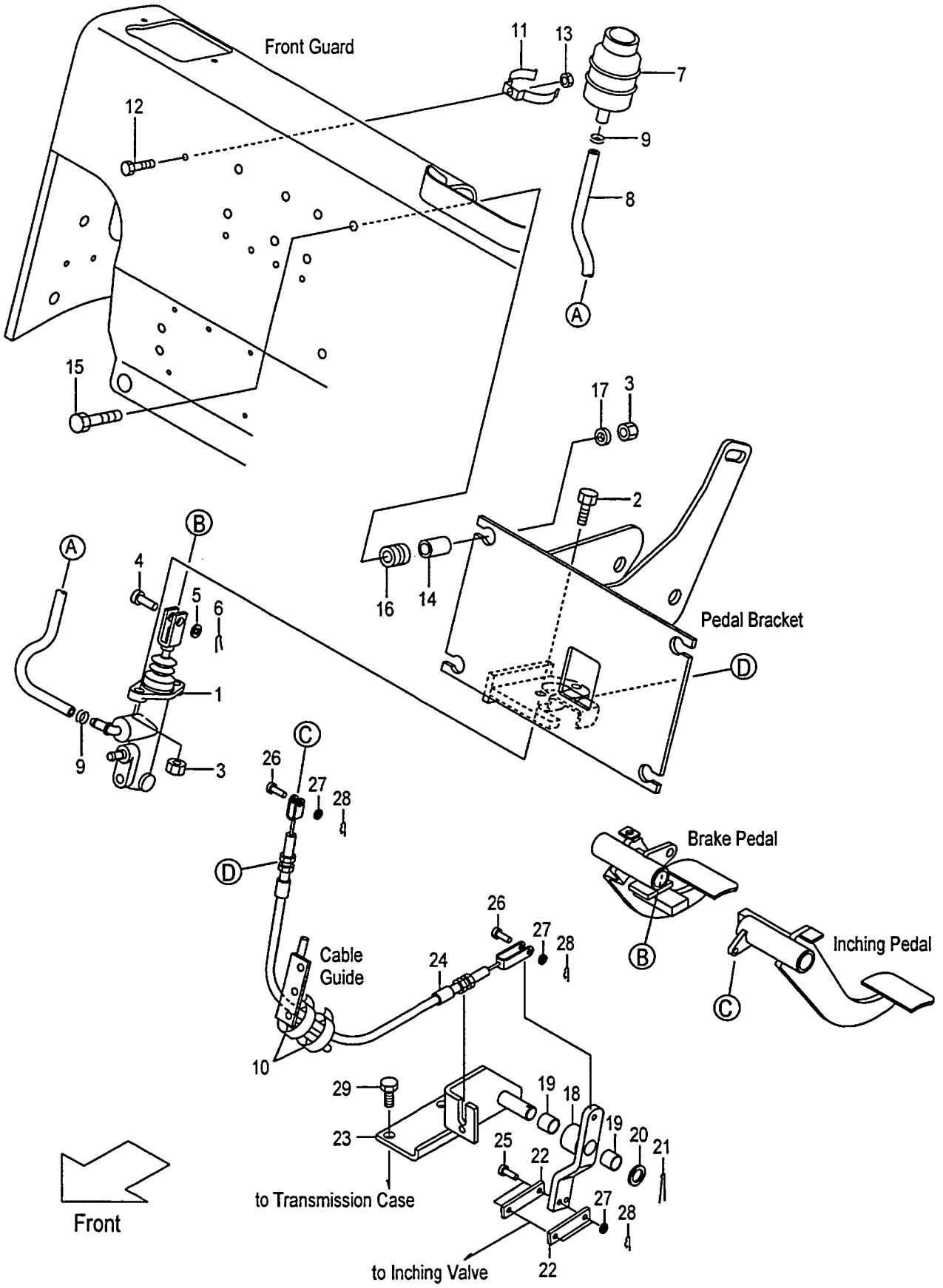

A:FD10T12 FD15T12 FD18T12

Item No	Part No.	Mark	Description		Req'd	Remarks : Serial No.
1	239A5-40102		CYL,BRAKE-MASTER	ｼﾘﾝﾀﾞ	1	SEE FIG.114
2	01184-10030		BOLT	ﾎﾞﾙﾄ	2	
3	01400-00010		NUT	ﾅｯﾄ	6	
4	02262-10030		PIN,CLEVIS	ﾋﾟﾝ	1	
5	02000-00010		WASHER	ﾜｯｼｬ	1	
6	02200-32025		PIN,COTTER	ﾋﾟﾝ	1	
7	23775-42101		TANK,RESERVE	ﾀﾝｸ	1	
8	22655-42591		HOSE	ﾎｰｽ	1	
9	25595-42491		CLIP,HOSE	ｸﾘｯﾌﾟ	2	
10	04913-11200		BAND	ﾊﾞﾝﾄﾞ	2	
11	224G5-42061		CLIP,RESERVE-TANK	ｸﾘｯﾌﾟ	1	
12	239A5-42381		BOLT	ﾎﾞﾙﾄ	1	
13	01400-00006		NUT	ﾅｯﾄ	1	
14	216G7-32011		COLLAR	ｶﾗｰ	4	
15	216G6-43241		BOLT	ﾎﾞﾙﾄ	4	
16	238F5-42601		RUBBER,MOUNT	ﾗﾊﾞｰ	4	
17	22252-32251		WASHER	ﾜｯｼｬ	4	
A1	218H5-40521		LINK-ASSY	ﾘﾝｸｱｯｾﾝ	1	INC.18,19
18	NO PART NO.	#	LINK	ﾘﾝｸ	1	
19	23647-40121		BUSHING	ﾌﾞｯｼﾝｸﾞ	2	
20	02000-00016		WASHER	ﾜｯｼｬ	1	
21	02200-04025		PIN,COTTER	ﾋﾟﾝ	1	
22	218H5-42521		PLATE	ﾌﾟﾚｰﾄ	2	
23	218H5-40501		BRACKET,LINK	ﾌﾞﾗｹｯﾄ	1	
24	239B5-42501		CABLE,INCHING	ｹｰﾌﾞﾙ	1	
25	02262-06025		PIN,CLEVIS	ﾋﾟﾝ	2	
26	02262-06020		PIN,CLEVIS	ﾋﾟﾝ	2	
27	02000-00006		WASHER	ﾜｯｼｬ	4	
28	216G5-22081		PIN,SNAP	ﾋﾟﾝ	4	
29	01184-10020		BOLT	ﾎﾞﾙﾄ	2	

FIG.110 BRAKE PIPE (CLUTCH)

(F6015450) ﾌﾞﾚｰｷﾊﾟｲﾌﾟ

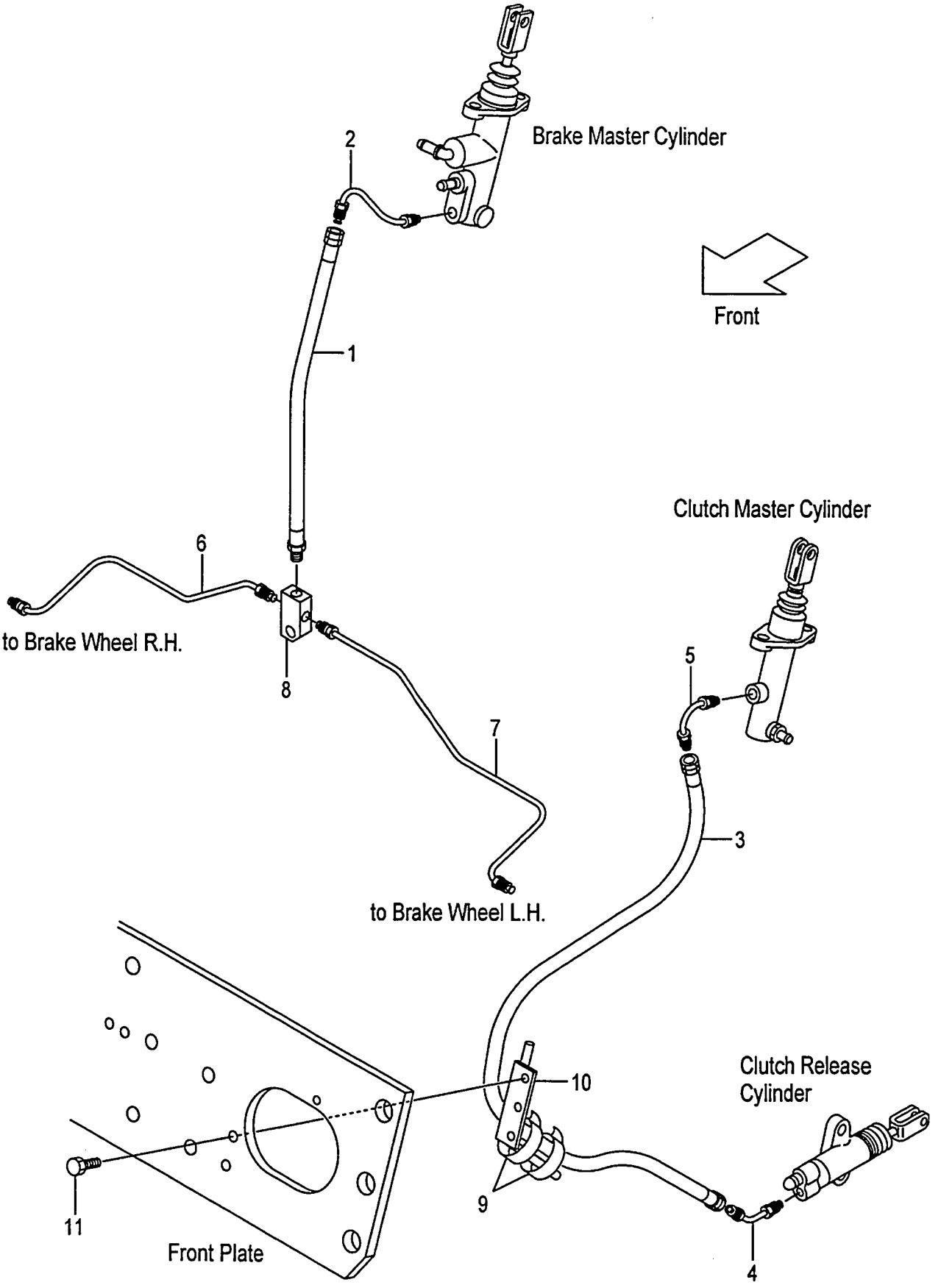

FIG.110

(F6015450)

A:FD10C12 FD15C12 FD18C12

Item No	Part No.	Mark	Description		Req'd	Remarks : Serial No.
1	239A5-42071		HOSE,BRAKE	ﾎｰｽ	1	
2	238F5-42421		PIPE,BRAKE-MASTER	ﾊﾟｲﾌﾟ	1	
3	239A5-42451		HOSE,CLUTCH	ﾎｰｽ	1	
4	239A5-42461		PIPE,CLUTCH-RELEASE	ﾊﾟｲﾌﾟ	1	
5	239A5-42471		PIPE,CLUTCH-MASTER	ﾊﾟｲﾌﾟ	1	
6	218G5-42601		PIPE,BRAKE,RH	ﾊﾟｲﾌﾟ	1	
7	218G5-42621		PIPE,BRAKE,LH	ﾊﾟｲﾌﾟ	1	
8	23455-42021		THREE-WAY	ｽﾘｰｳｴｲ	1	
9	04913-11200		BAND	ﾊﾞﾝﾄﾞ	2	
10	239A5-42351		GUIDE,CABLE	ｶﾞｲﾄﾞ	1	(WITHOUT EXC,EXE,EXK,EXN,OBT)
11	216H3-92291		BOLT	ﾎﾞﾙﾄ	2	(WITHOUT EXC,EXE,EXK,EXN,OBT)

FIG.111 BRAKE PIPE (CLUTCH):[PC]

(F60154E0) ﾌﾞﾚｰｷﾊﾟｲﾌﾟ

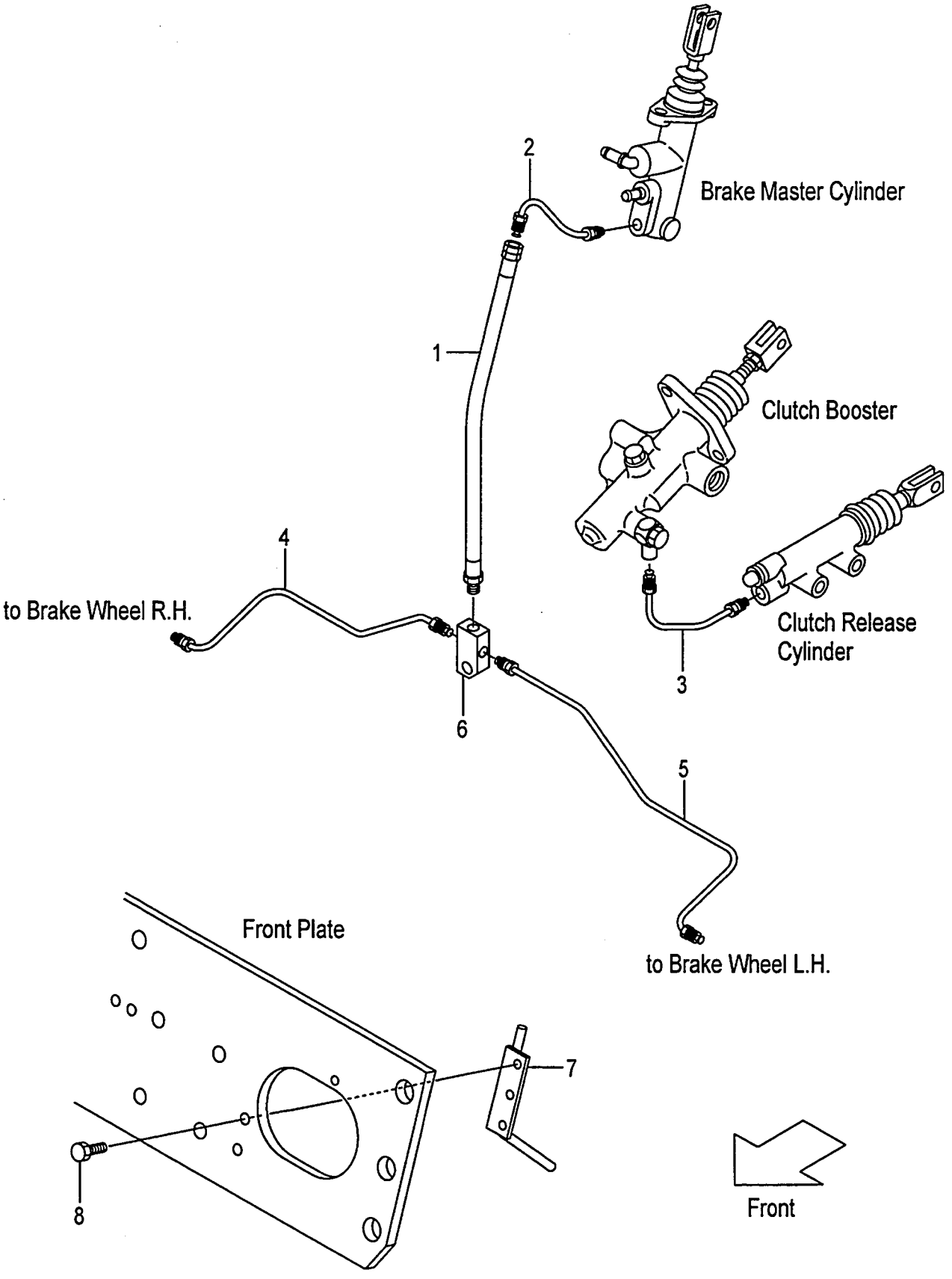

A:FD10C12 FD15C12 FD18C12

Item No	Part No.	Mark	Description		Req'd	Remarks : Serial No.
1	239A5-42071		HOSE,BRAKE	ﾎｰｽ	1	[PC]
2	238F5-42421		PIPE,BRAKE-MASTER	ﾊﾟｲﾌﾟ	1	[PC]
3	219S5-42271		PIPE,RELEASE-CYL	ﾊﾟｲﾌﾟ	1	[PC]
4	218G5-42601		PIPE,BRAKE,RH	ﾊﾟｲﾌﾟ	1	[PC]
5	218G5-42621		PIPE,BRAKE,LH	ﾊﾟｲﾌﾟ	1	[PC]
6	23455-42021		THREE-WAY	ｽﾘｰｳｴｲ	1	[PC]
7	239A5-42351		GUIDE,CABLE	ｶﾞｲﾄﾞ	1	[PC]
8	216H3-92291		BOLT	ﾎﾞﾙﾄ	2	[PC]

FIG.112 BRAKE PIPE (TOR-CON)

(F6015460) ﾌﾞﾚｰｷﾊﾟｲﾌﾟ

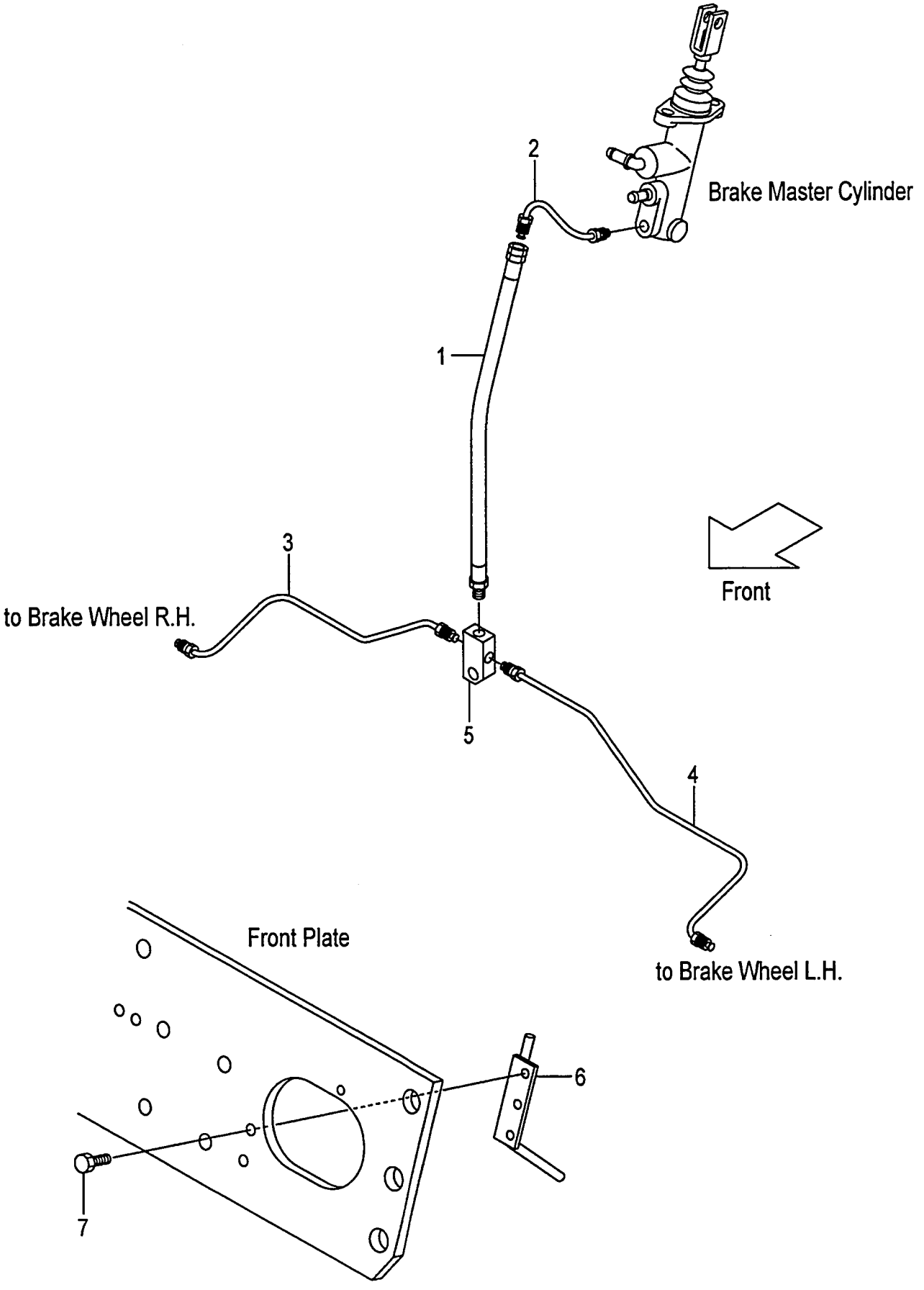

FIG.112
(F6015460)

A:FD10T12 FD15T12 FD18T12

Item No	Part No.	Mark	Description		Req'd	Remarks : Serial No.
1	239A5-42071		HOSE,BRAKE	ホース	1	
2	238F5-42421		PIPE,BRAKE-MASTER	ﾊﾟｲﾌﾟ	1	
3	218G5-42601		PIPE,BRAKE,RH	ﾊﾟｲﾌﾟ	1	
4	218G5-42621		PIPE,BRAKE,LH	ﾊﾟｲﾌﾟ	1	
5	23455-42021		THREE-WAY	ｽﾘｰｳｴｲ	1	
6	239A5-42351		GUIDE,CABLE	ｶﾞｲﾄﾞ	1	(WITHOUT EXC,EXE,EXK,EXN,OBT)
7	216H3-92291		BOLT	ﾎﾞﾙﾄ	2	(WITHOUT EXC,EXE,EXK,EXN,OBT)

FIG.113 FOOT PEDAL COVER

(F6015470) ﾌｯﾄﾍﾟﾀﾞﾙｶﾊﾞｰ

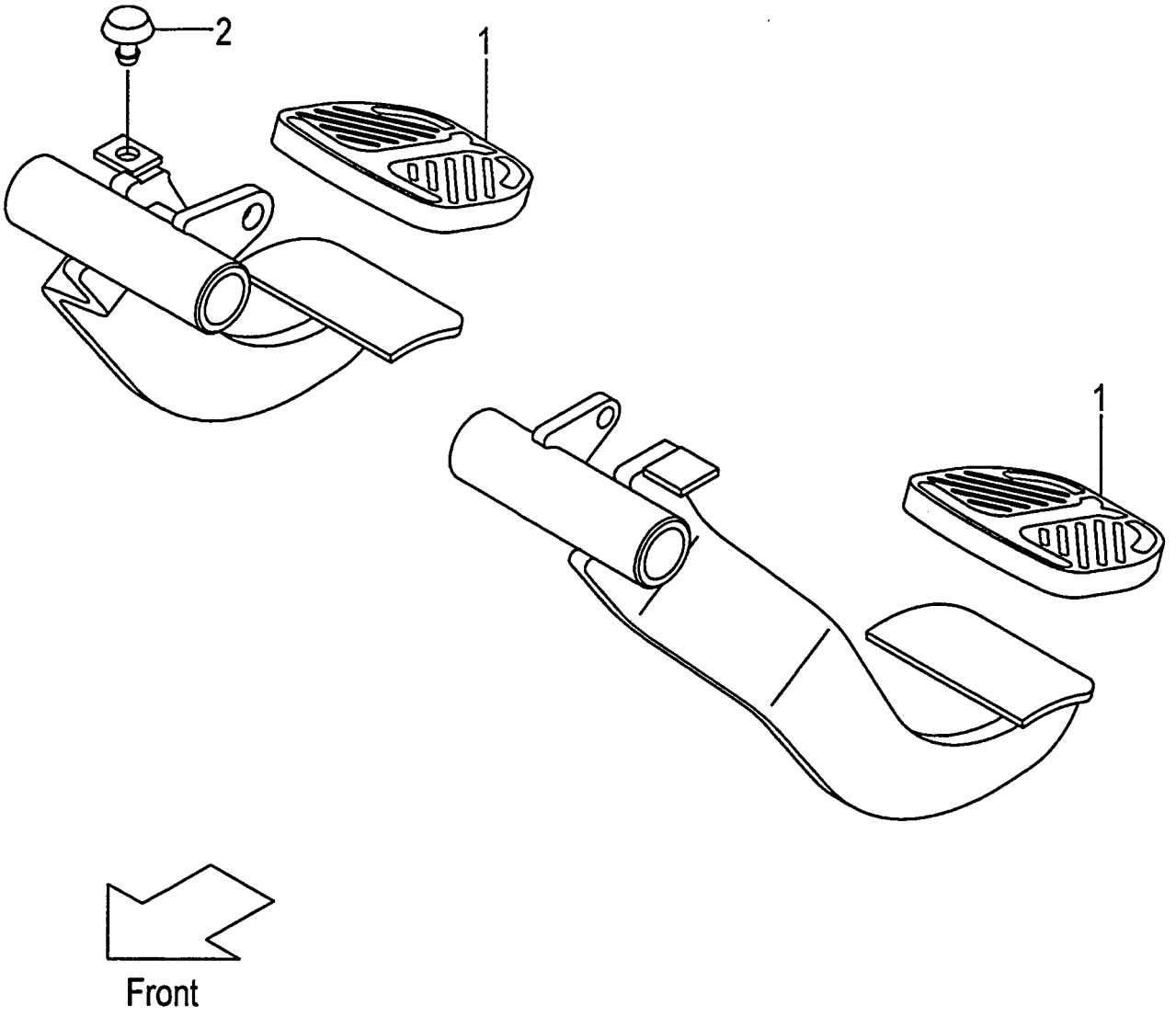

A:FD10C12 FD15C12 FD18C12
B:FD10T12 FD15T12 FD18T12

FIG.113
(F6015470)

Item No	Part No.	Mark	Description	Req'd	Remarks : Serial No.
1	239A5-42301		COVER,HEAD カバー	2	
2	23235-40091		RUBBER ラバー	1	

FIG.114 BRAKE MASTER CYLINDER

(F6015480) ﾌﾞﾚｰｷﾏｽﾀｼﾘﾝﾀﾞ

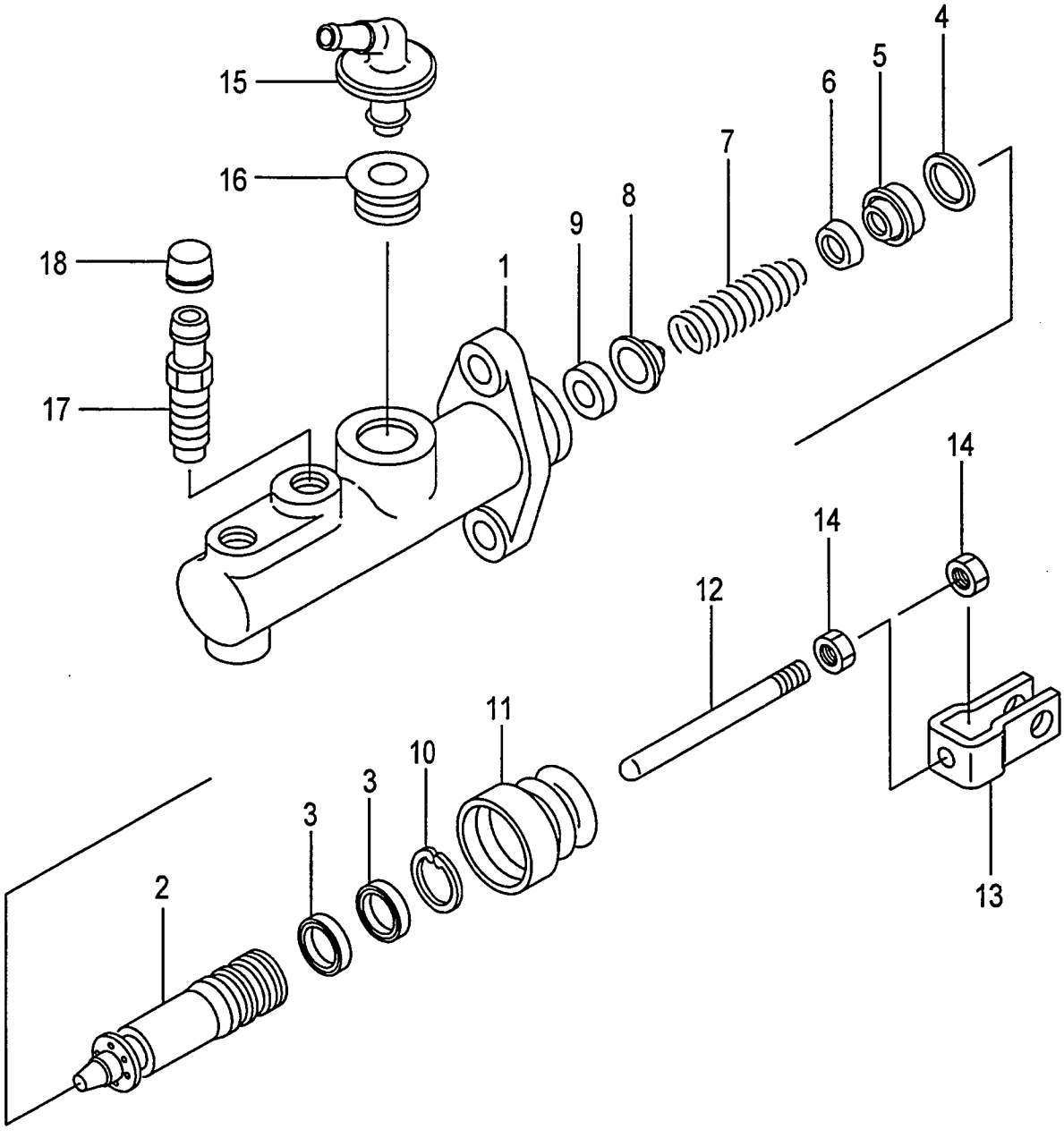

A:FD10C12 FD15C12 FD18C12
B:FD10T12 FD15T12 FD18T12

FIG.114
(F6015480)

Item No	Part No.	Mark	Description		Req'd	Remarks : Serial No.
A1	239A5-40102		CYL-ASSY,BRAKE-MASTER	ｼﾘﾝﾀﾞｱｯｾﾝ	1	INC.1-18
901	239A5-40641	K1	KIT,REPAIR	ﾘﾍﾟｱｷｯﾄ	1	INC.2-7,10,11,18
1	NO PART NO.	#	BODY,CYL	ﾎﾞﾃﾞｨ	1	
2	239A5-42161	*	PISTON	ﾋﾟｽﾄﾝ	1	
3	239A5-42121	*	CAP,SECONDARY	ｷｬｯﾌﾟ	2	
4	239A5-42101	*	SPACER	ｽﾍﾟｰｻ	1	
5	239A5-42181	*	CAP,PRIMARY	ｷｬｯﾌﾟ	1	
6	239A5-42191	*	THIMBLE	ｼﾝﾌﾞﾙ	1	
7	239A5-42251	*	SPRING	ｽﾌﾟﾘﾝｸﾞ	1	
8	25595-42381		VALVE	ﾊﾞﾙﾌﾞ	1	
9	25595-42391		SEAT,VALVE	ｼｰﾄ	1	
10	25595-42311	*	RING,SNAP	ｽﾅｯﾌﾟﾘﾝｸﾞ	1	
11	239A5-42221	*	BOOT	ﾌﾞｰﾂ	1	
12	239A5-42271		ROD,PUSH	ﾛｯﾄﾞ	1	
13	239A5-42281		YOKE	ﾖｰｸ	1	
14	239A5-42291		NUT	ﾅｯﾄ	2	
15	25595-42411		UNION,FILLER	ﾕﾆｵﾝ	1	
16	25595-42421		BUSHING	ﾌﾞｯｼﾝｸﾞ	1	
17	239A5-42311		VALVE,BLEEDER	ﾊﾞﾙﾌﾞ	1	
18	239A5-42321	*	CAP,BLEEDER	ｷｬｯﾌﾟ	1	

FIG.115 BRAKE LEVER

(F6015510) ﾌﾞﾚｰｷﾚﾊﾞｰ

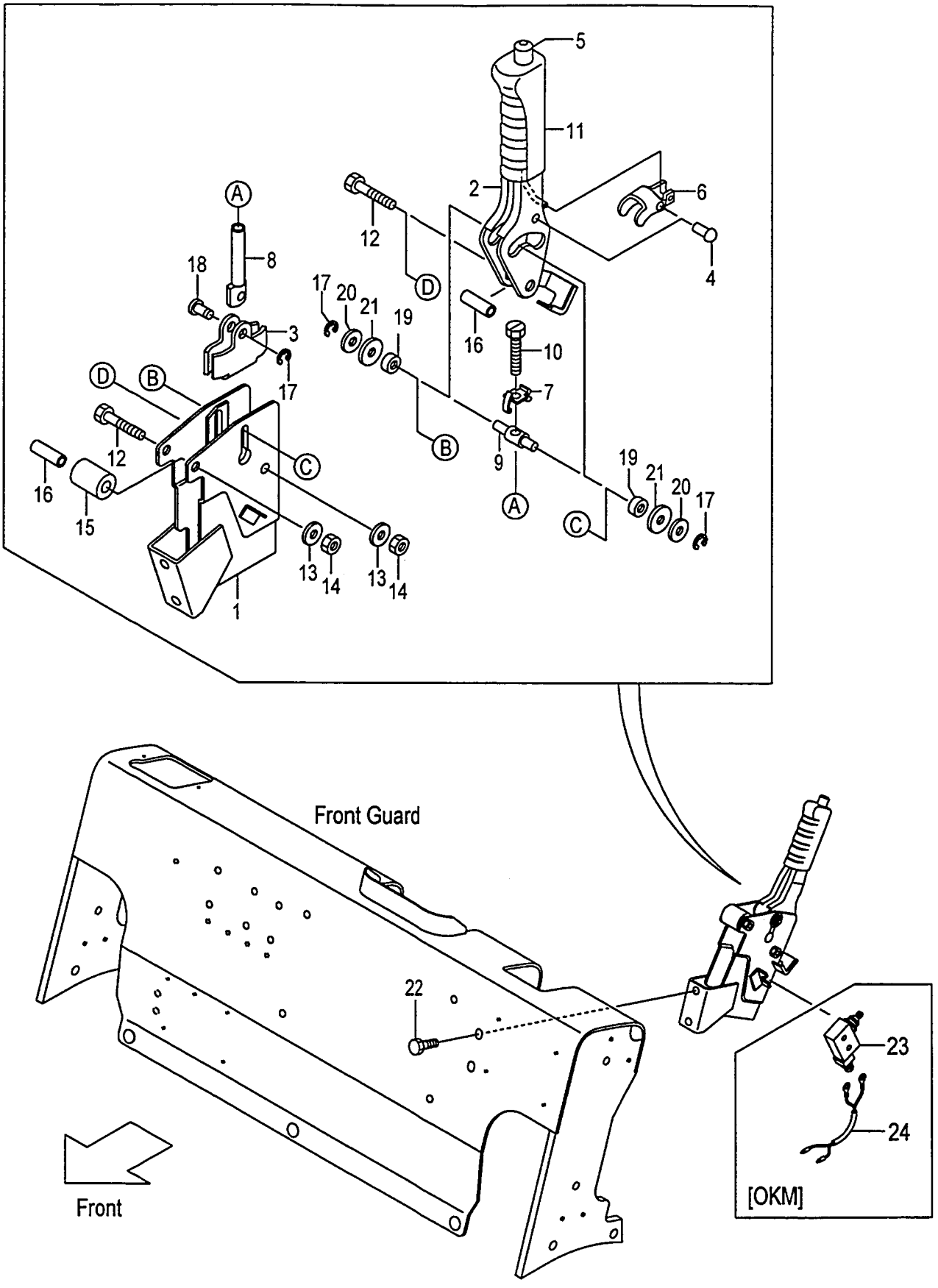

A:FD10C12 FD10T12 FD15C12 FD15T12 FD18C12 FD18T12

Item No	Part No.	Mark	Description		Req'd	Remarks : Serial No.
A1	239A5-50101		LEVER-ASSY,BRAKE	ﾌﾞﾚｰｷﾚﾊﾞｰｱｯｾﾝ	1	INC.1-21
1	NO PART NO.		BRACKET,BRAKE-LEVER	ﾌﾞﾗｹｯﾄ	1	
2	NO PART NO.		LEVER	ﾚﾊﾞｰ	1	
3	27415-52151		BRACKET	ﾌﾞﾗｹｯﾄ	1	
4	230C5-55021		PIN	ﾋﾟﾝ	1	
5	230C5-55031		ROD,RELEASE	ﾛｯﾄﾞ	1	
6	230C5-55041		PLATE,LOCK	ﾌﾟﾚｰﾄ	1	
7	230C5-55051		PLATE,TENSION	ﾌﾟﾚｰﾄ	1	
8	230C5-55061		ROD,ADJUST	ﾛｯﾄﾞ	1	
9	230C5-55071		PIN,TRUNION	ﾋﾟﾝ	1	
10	230C5-55081		BOLT	ﾎﾞﾙﾄ	1	
11	NO PART NO.		GRIP	ｸﾞﾘｯﾌﾟ	1	
12	01100-08050		BOLT	ﾎﾞﾙﾄ	2	
13	02010-00008		WASHER	ﾜｯｼｬ	2	
14	01400-00008		NUT	ﾅｯﾄ	2	
15	222A5-52111		RUBBER,STOPPER	ﾗﾊﾞｰ	1	
16	230C5-55101		COLLAR	ｶﾗｰ	2	
17	214A5-52131		E-RING	Eﾘﾝｸﾞ	3	
18	230C5-55111		PIN	ﾋﾟﾝ	1	
19	230C5-55121		ROLLER,CAM	ﾛｰﾗ	2	
20	214A5-52121		WASHER	ﾜｯｼｬ	2	
21	214A5-52241		WASHER	ﾜｯｼｬ	2	
22	216G6-43231		BOLT	ﾎﾞﾙﾄ	2	
23	27912-62441		SWITCH,MICRO	ｽｲｯﾁ	1	[OKM]
24	535H3-82261		WIRE-HARNESS,SWITCH	ﾜｲﾔﾊｰﾈｽ	1	[OKM]

FIG.116 FRAME

(F6016110) フレーム

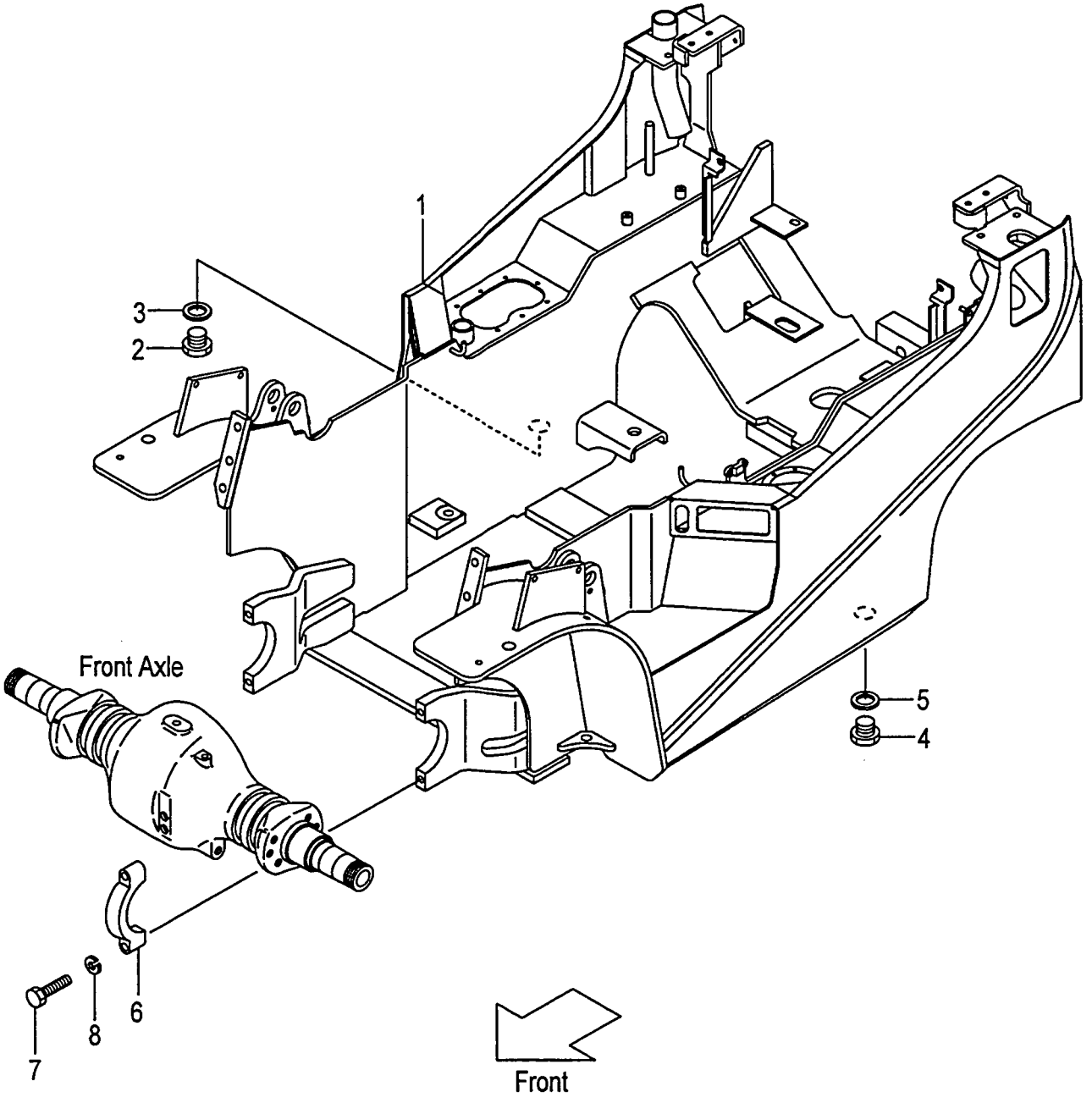

A:FD10C12 D:FD15T12
B:FD10T12 E:FD18C12
C:FD15C12 F:FD18T12

FIG.116
(F6016110)

Item No	Part No.	Mark	Description		Req'd	Remarks : Serial No.
1	NO PART NO.	#	FRAME	フレーム	1	
2	21237-52051		PLUG,DRAIN	ﾌﾟﾗｸﾞ	1	
3	21237-52062		PACKING	ﾊﾟｯｷﾝｸﾞ	1	
4	21237-52051		PLUG,DRAIN	ﾌﾟﾗｸﾞ	1	
5	21237-52062		PACKING	ﾊﾟｯｷﾝｸﾞ	1	
6	210F6-12441		CAP,SUPPORT,F-AXLE	ｷｬｯﾌﾟ	2	
7	01100-14070		BOLT	ﾎﾞﾙﾄ	4	
8	02010-00014		WASHER	ﾜｯｼｬ	4	

FIG.117 OIL TANK
(F6016120) オイルタンク

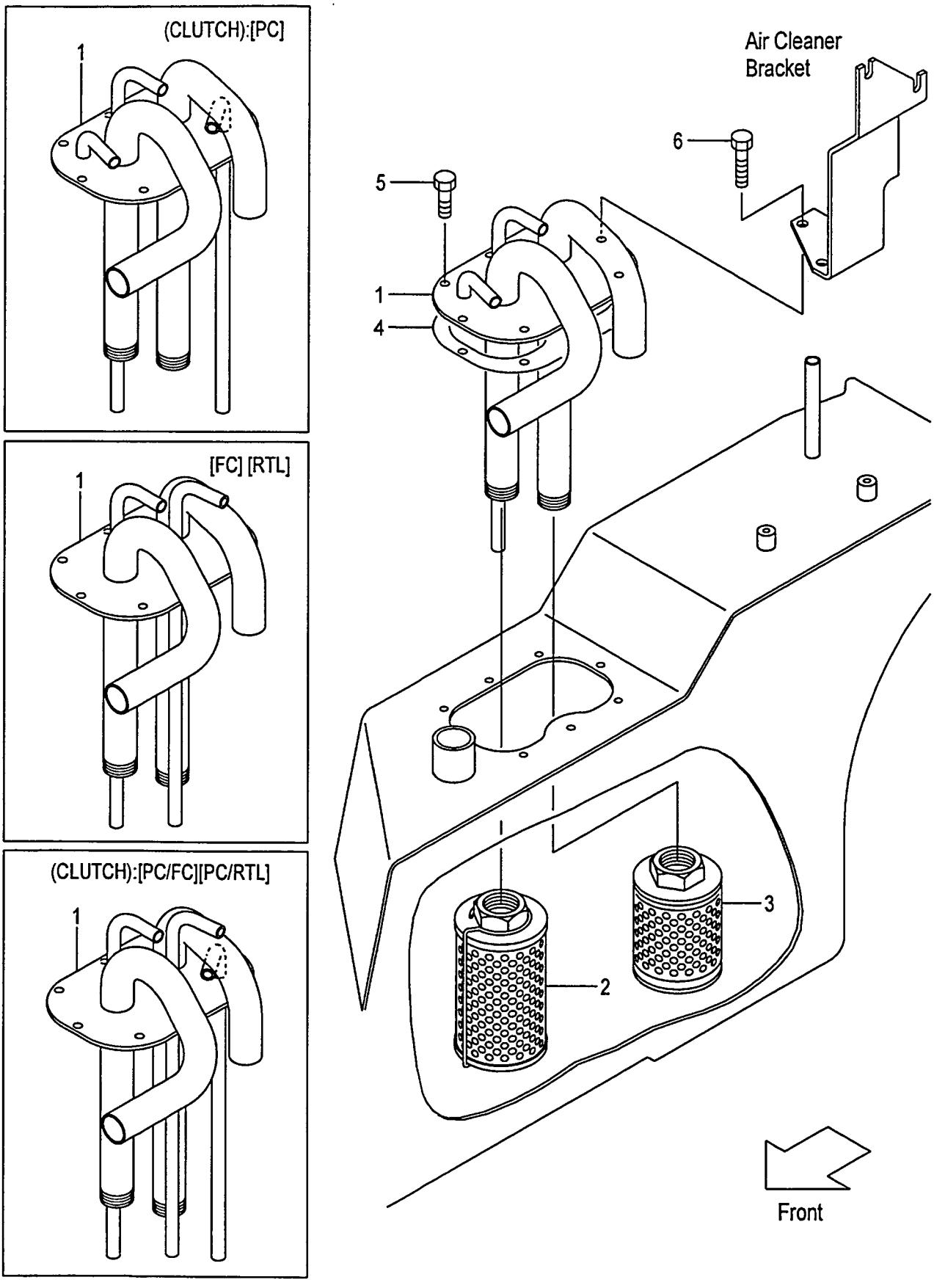

A:FD10C12 FD15C12 FD18C12
B:FD10T12 FD15T12 FD18T12

FIG.117
(F6016120)

Item No	Part No.	Mark	Description		Req'd	Remarks : Serial No.
1	239A7-52001		PIPE,SUCTION	ﾊﾟｲﾌﾟ	1	
-	239H7-52001		PIPE,SUCTION	ﾊﾟｲﾌﾟ	1	A [PC]
-	539G3-72001		PIPE,SUCTION	ﾊﾟｲﾌﾟ	1	[FC][RTL]
-	538S3-72001		PIPE,SUCTION	ﾊﾟｲﾌﾟ	1	A [PC/FC][PC/RTL]
2	271A7-52301		FILTER,RETURN	ﾌｨﾙﾀ	1	
3	216G7-52051		FILTER,SUCTION	ﾌｨﾙﾀ	1	
4	216G2-22202		PACKING	ﾊﾟｯｷﾝｸﾞ	1	
5	229F2-22151		BOLT	ﾎﾞﾙﾄ	6	
6	229F2-22161		BOLT	ﾎﾞﾙﾄ	2	

FIG.118 OIL CAP & LEVEL
(F6016130) オイルキャップ&レベル

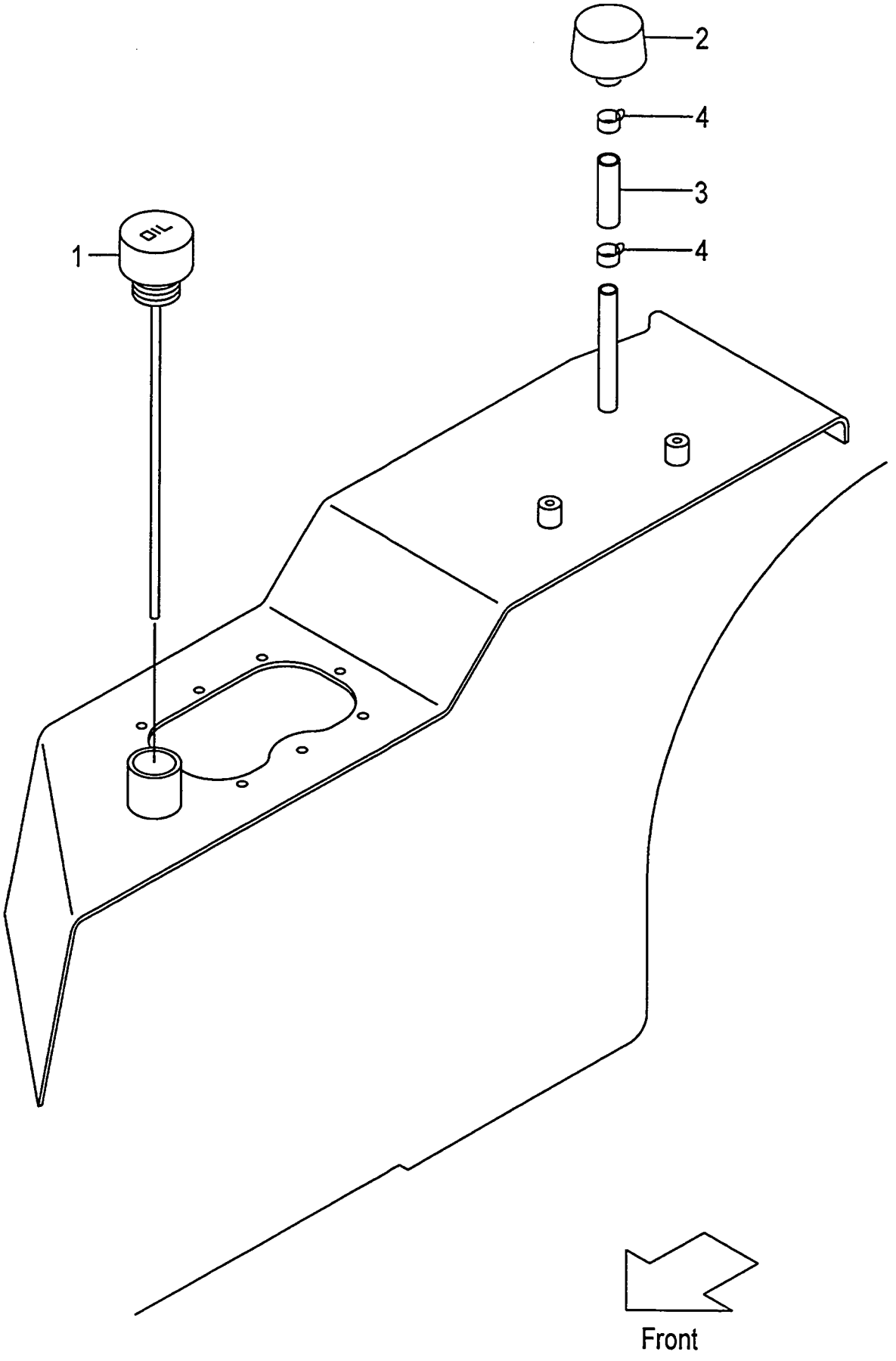

A:FD10C12 FD10T12 FD15C12 FD15T12 FD18C12 FD18T12

Item No	Part No.	Mark	Description		Req'd	Remarks : Serial No.
1	216G7-52101		CAP,OIL	ｷｬｯﾌﾟ	1	
2	216G7-52201		CAP,BREATHER	ｷｬｯﾌﾟ	1	
3	04710-04005		HOSE	ﾎｰｽ	1	
4	04914-00019		CLIP	ｸﾘｯﾌﾟ	2	

FIG.119 FUEL TANK
(F6016150) フューエルタンク

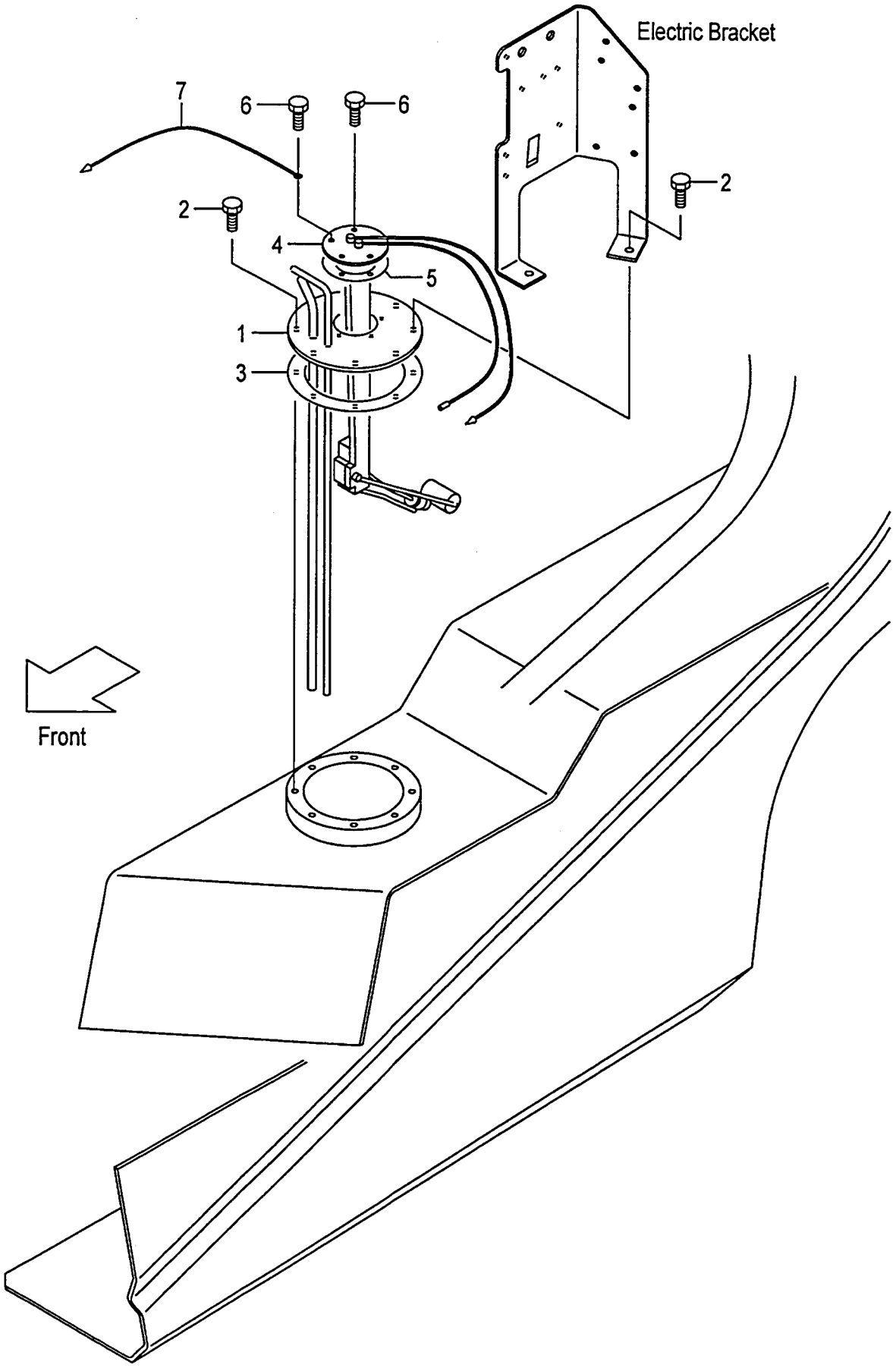

A:FD10C12 FD10T12 FD15C12 FD15T12 FD18C12 FD18T12

Item No	Part No.	Mark	Description		Req'd	Remarks : Serial No.
1	238G2-22101		PLATE,FUEL-TOP	ﾌﾟﾚｰﾄ	1	
2	01183-06016		BOLT	ﾎﾞﾙﾄ	8	
3	272E7-52022		GASKET	ｶﾞｽｹｯﾄ	1	
4	238G2-22021		UNIT,SENDING,FUEL	ﾕﾆｯﾄ	1	
-	238G2-22031		UNIT,SENDING,FUEL	ﾕﾆｯﾄ	1	[OKM]
5	229F2-22071		GASKET	ｶﾞｽｹｯﾄ	1	
6	229F2-22171		BOLT	ﾎﾞﾙﾄ	5	
7	25592-42121		WIRE	ﾜｲﾔ	1	

FIG.120 BALANCE WEIGHT

(F6016310) ﾊﾞﾗﾝｽｳｴｲﾄ

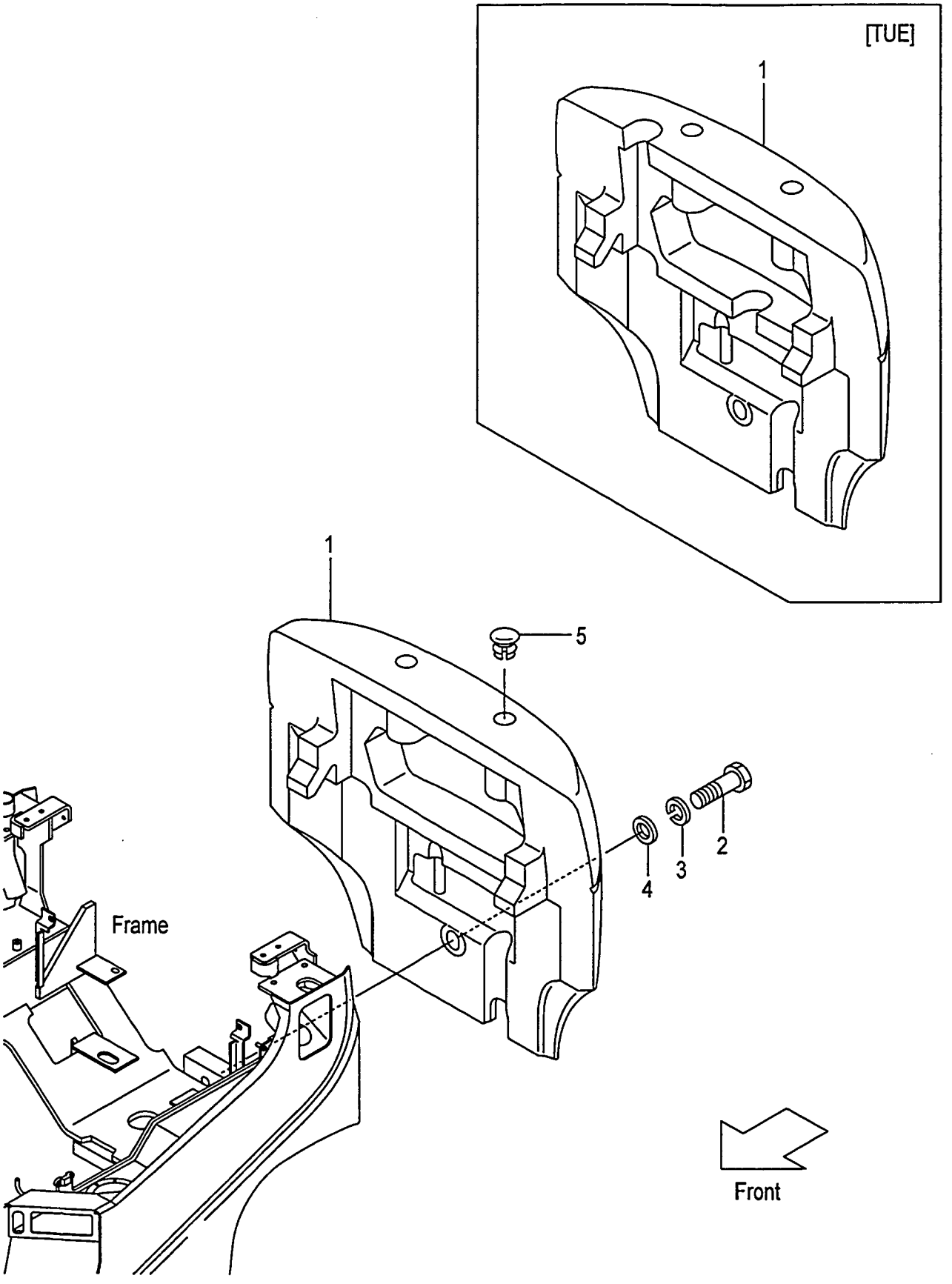

A:FD10C12 D:FD15T12
B:FD10T12 E:FD18C12
C:FD15C12 F:FD18T12

FIG.120
(F6016310)

Item No	Part No.	Mark	Description		Req'd	Remarks : Serial No.
1	NO PART NO.	#	WEIGHT,BALANCE	ｳｴｲﾄ	1	
2	01110-30090		BOLT	ﾎﾞﾙﾄ	1	A,B
-	01110-30150		BOLT	ﾎﾞﾙﾄ	1	C,D,E,F
3	02010-00030		WASHER	ﾜｯｼｬ	1	
4	22216-30051		WASHER	ﾜｯｼｬ	1	
5	216G6-32101		CAP	ｷｬｯﾌﾟ	2	

FIG.121 BALANCE WEIGHT [HC]

(F6016320) ﾊﾞﾗﾝｽｳｴｲﾄ

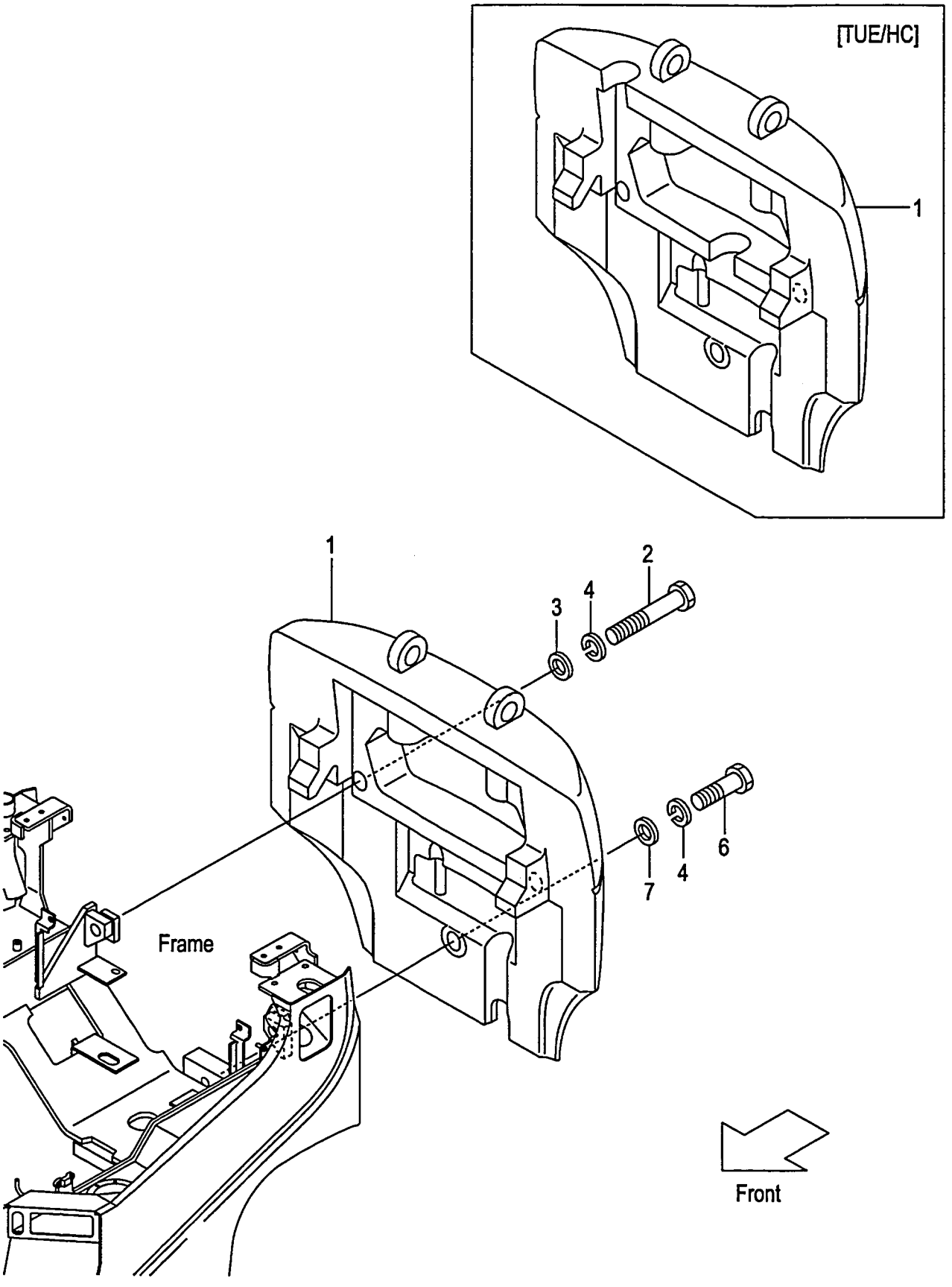

A:FD10C12 D:FD15T12
B:FD10T12 E:FD18C12
C:FD15C12 F:FD18T12

FIG.121
(F6016320)

Item No	Part No.	Mark	Description		Req'd	Remarks : Serial No.
1	NO PART NO.	#	WEIGHT,BALANCE	ｳｴｲﾄ	1	[HC][TUE/HC]
2	01113-30160		BOLT	ﾎﾞﾙﾄ	2	A,B [HC][TUE/HC]
-	01113-30190		BOLT	ﾎﾞﾙﾄ	2	C,D [HC][TUE/HC]
-	01113-30230		BOLT	ﾎﾞﾙﾄ	2	E,F [HC][TUE/HC]
3	225R6-32001		WASHER	ﾜｯｼｬ	2	[HC][TUE/HC]
4	02010-00030		WASHER	ﾜｯｼｬ	3	[HC][TUE/HC]
5	225R9-12101	+	DECAL,HOOK-CAUTION	ﾃﾞｶﾙ	1	[HC][TUE/HC]
6	01110-30090		BOLT	ﾎﾞﾙﾄ	1	A,B [HC][TUE/HC]
-	01110-30150		BOLT	ﾎﾞﾙﾄ	1	C,D,E,F [HC][TUE/HC]
7	22216-30051		WASHER	ﾜｯｼｬ	1	[HC][TUE/HC]

FIG.122 FRONT GUARD

(F6016410) フロントガード

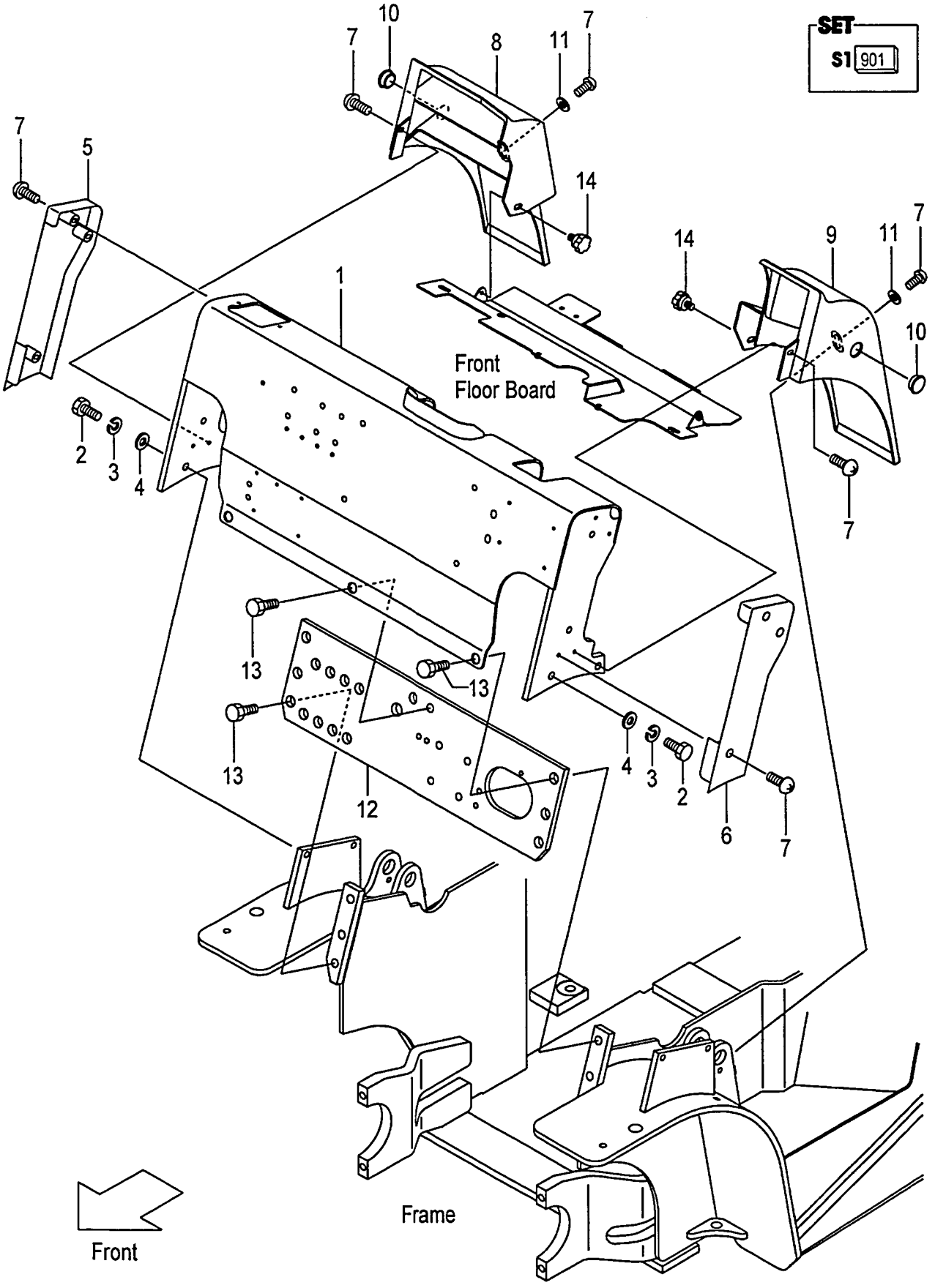

A:FD10C12 FD15C12 FD18C12
B:FD10T12 FD15T12 FD18T12

FIG.122
(F6016410)

Item No	Part No.	Mark	Description		Req'd	Remarks : Serial No.
901	218G6-49801	S1	SET,COVER	ｶﾊﾞｰｾｯﾄ	1	INC.5,6
1	239A6-40201		GUARD,FRONT	ｶﾞｰﾄﾞ	1	
-	539A2-60601		GUARD,FRONT	ｶﾞｰﾄﾞ	1	B
						[EXN]
2	01186-12030		BOLT	ﾎﾞﾙﾄ	4	
-	01109-12030		BOLT,STAINLESS	ﾎﾞﾙﾄ	4	[FC]
3	02013-00012		WASHER	ﾜｯｼｬ	4	[FC]
4	02001-00012		WASHER	ﾜｯｼｬ	4	[FC]
5	NO PART NO.	**	COVER,SIDE,RH	ｶﾊﾞｰ	1	
6	NO PART NO.	**	COVER,SIDE,LH	ｶﾊﾞｰ	1	
7	214A6-42252		SCREW	ｽｸﾘｭ	10	
8	218G6-42201		COVER,TILT-CYL,RH	ｶﾊﾞｰ	1	
9	218G6-42211		COVER,TILT-CYL,LH	ｶﾊﾞｰ	1	
10	514A5-12701		PLUG,HOLE	ﾌﾟﾗｸﾞ	2	
11	02000-20010		WASHER	ﾜｯｼｬ	2	
12	239A6-42001		PLATE,FRONT	ﾌﾟﾚｰﾄ	1	
13	216G6-43561		BOLT,FLANGE	ﾎﾞﾙﾄ	7	
14	256C5-12671		BOLT,KNOB	ﾎﾞﾙﾄ	2	

FIG.123 BONNET
(F6016420) ﾎﾞﾝﾈｯﾄ

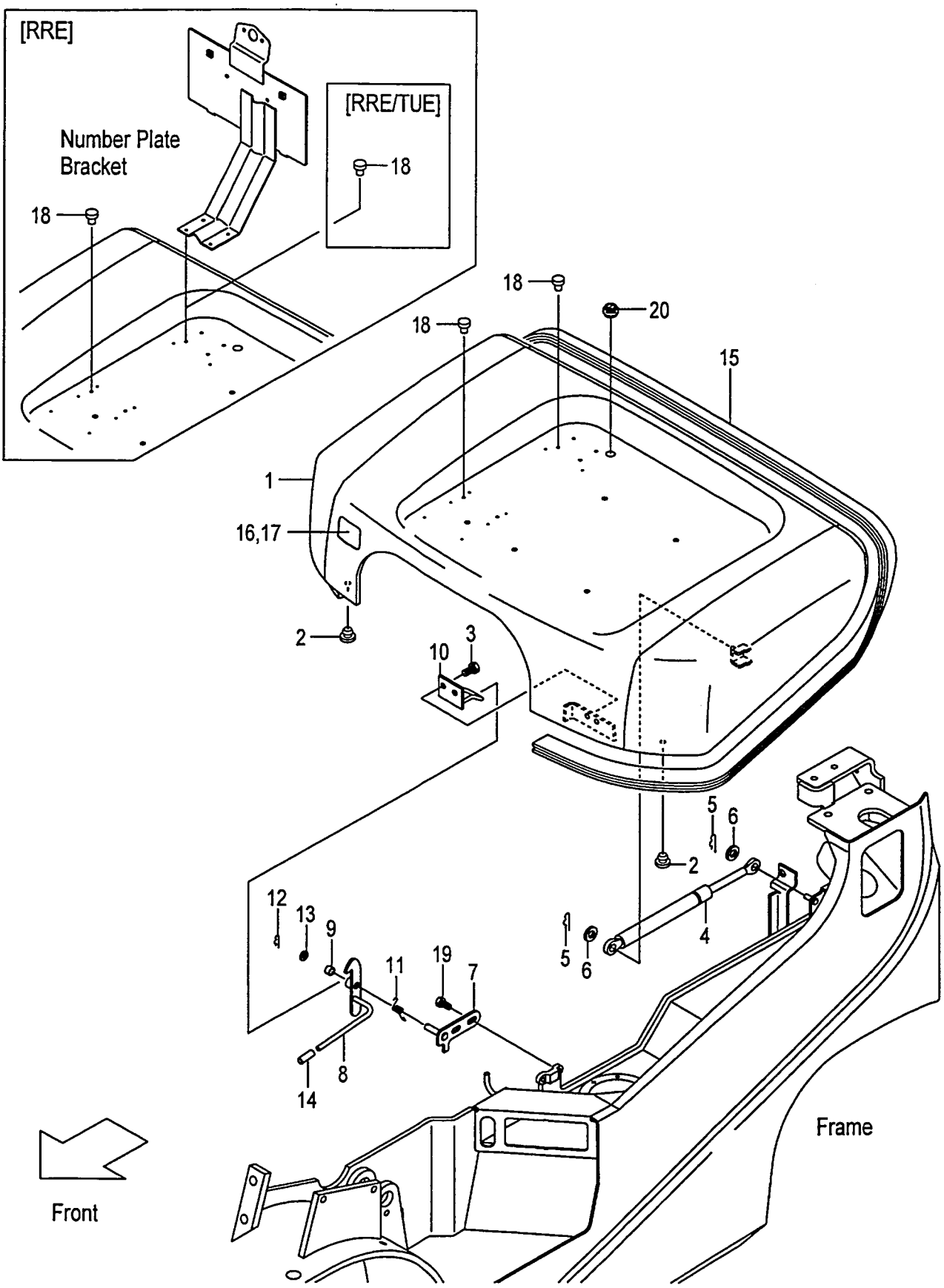

A:FD10C12 FD10T12 FD15C12 FD15T12 FD18C12 FD18T12

Item No	Part No.	Mark	Description		Req'd	Remarks : Serial No.
1	218G6-40501		BONNET	ﾎﾞﾝﾈｯﾄ	1	
-	518G6-42101		BONNET	ﾎﾞﾝﾈｯﾄ	1	[SETDX1]
2	23456-42181		STOPPER,BONNET	ｽﾄｯﾊﾟ	2	
3	01183-08016		BOLT	ﾎﾞﾙﾄ	2	
4	535C2-60401		SPRING,GAS	ｽﾌﾟﾘﾝｸﾞ	1	
-	539A9-92201		SPRING,GAS	ｽﾌﾟﾘﾝｸﾞ	1	[RRE]
5	216H3-92171		PIN,SNAP	ﾋﾟﾝ	2	
6	02000-00008		WASHER	ﾜｯｼｬ	2	
A1	218G6-40521		CATCH-ASSY,BONNET	ﾎﾞﾝﾈｯﾄｷｬｯﾁｱｯｾﾝ	1	INC.7-13
7	218G6-42451		BRACKET	ﾌﾞﾗｹｯﾄ	1	
8	218G6-42471		LATCH	ﾗｯﾁ	1	
9	23655-22101		BUSHING	ﾌﾞｯｼﾝｸﾞ	1	
10	216G6-42451		HOOK	ﾌｯｸ	1	
11	216G6-42481		SPRING	ｽﾌﾟﾘﾝｸﾞ	1	
12	216H5-42141		PIN,SNAP	ﾋﾟﾝ	1	
13	02000-00010		WASHER	ﾜｯｼｬ	1	
14	216G6-52291		CAP	ｷｬｯﾌﾟ	1	
15	218G6-42641		RUBBER,SEAL,BONNET	ﾗﾊﾞｰ	1	
16	209P6-40401		INSULATOR	ｲﾝｼｭﾚｰﾀ	1	
-	539A6-42111		INSULATOR	ｲﾝｼｭﾚｰﾀ	1	[SETDX1]
17	216G6-42541		CLIP	ｸﾘｯﾌﾟ	10	
18	25596-42361		RIVET,NYLON	ﾘﾍﾞｯﾄ	6	
-	25596-42361		RIVET,NYLON	ﾘﾍﾞｯﾄ	2	[RRE]
-	25596-42361		RIVET,NYLON	ﾘﾍﾞｯﾄ	6	[RRE/TUE]
19	01185-08020		BOLT	ﾎﾞﾙﾄ	2	
20	27662-62711		GROMMET	ｸﾞﾛﾒｯﾄ	1	

FIG.124 RADIATOR COVER

(F6016430) ﾗｼﾞｴｰﾀｶﾊﾞｰ

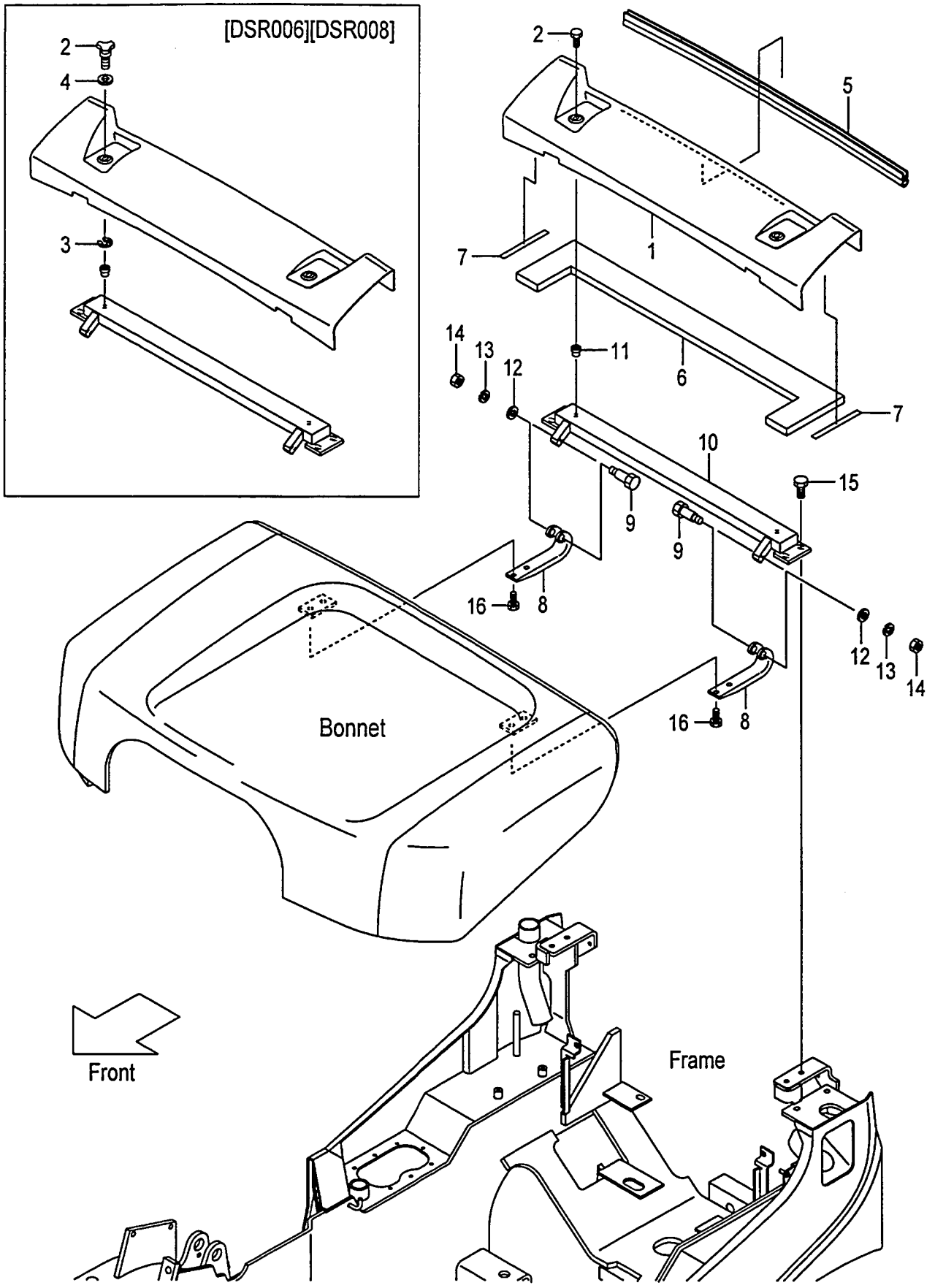

A:FD10C12 FD10T12 FD15C12 FD15T12 FD18C12 FD18T12

Item No	Part No.	Mark	Description		Req'd	Remarks : Serial No.
1	218G6-40301		COVER,RADIATOR	ｶﾊﾞｰ	1	
2	01181-08016		BOLT	ﾎﾞﾙﾄ	2	
-	222A6-42451		BOLT,KNOB	ﾎﾞﾙﾄ	2	[DSR006][DSR008]
3	222A6-42461		E-RING	Eﾘﾝｸﾞ	2	[DSR006][DSR008]
4	02000-00008		WASHER	ﾜｯｼｬ	2	[DSR006][DSR008]
5	218G6-42391		RUBBER,SEAL	ﾗﾊﾞｰ	1	
6	218G6-42291		RUBBER,RAD.COVER	ﾗﾊﾞｰ	1	
7	234A6-43121		RUBBER	ﾗﾊﾞｰ	2	
8	216G6-42911		HINGE	ﾋﾝｼﾞ	2	
9	216G6-42931		BOLT	ﾎﾞﾙﾄ	2	
10	218G6-42302		BRACKET,HINGE	ﾌﾞﾗｹｯﾄ	1	
11	514A5-12011		RIVET,POP	ﾘﾍﾞｯﾄ	2	
12	02000-00006		WASHER	ﾜｯｼｬ	2	
13	02010-00006		WASHER	ﾜｯｼｬ	2	
14	01400-00006		NUT	ﾅｯﾄ	2	
15	01186-10020		BOLT	ﾎﾞﾙﾄ	4	
16	01183-08016		BOLT	ﾎﾞﾙﾄ	4	

FIG.125 FLOOR BOARD

(F6016440) フロアボード

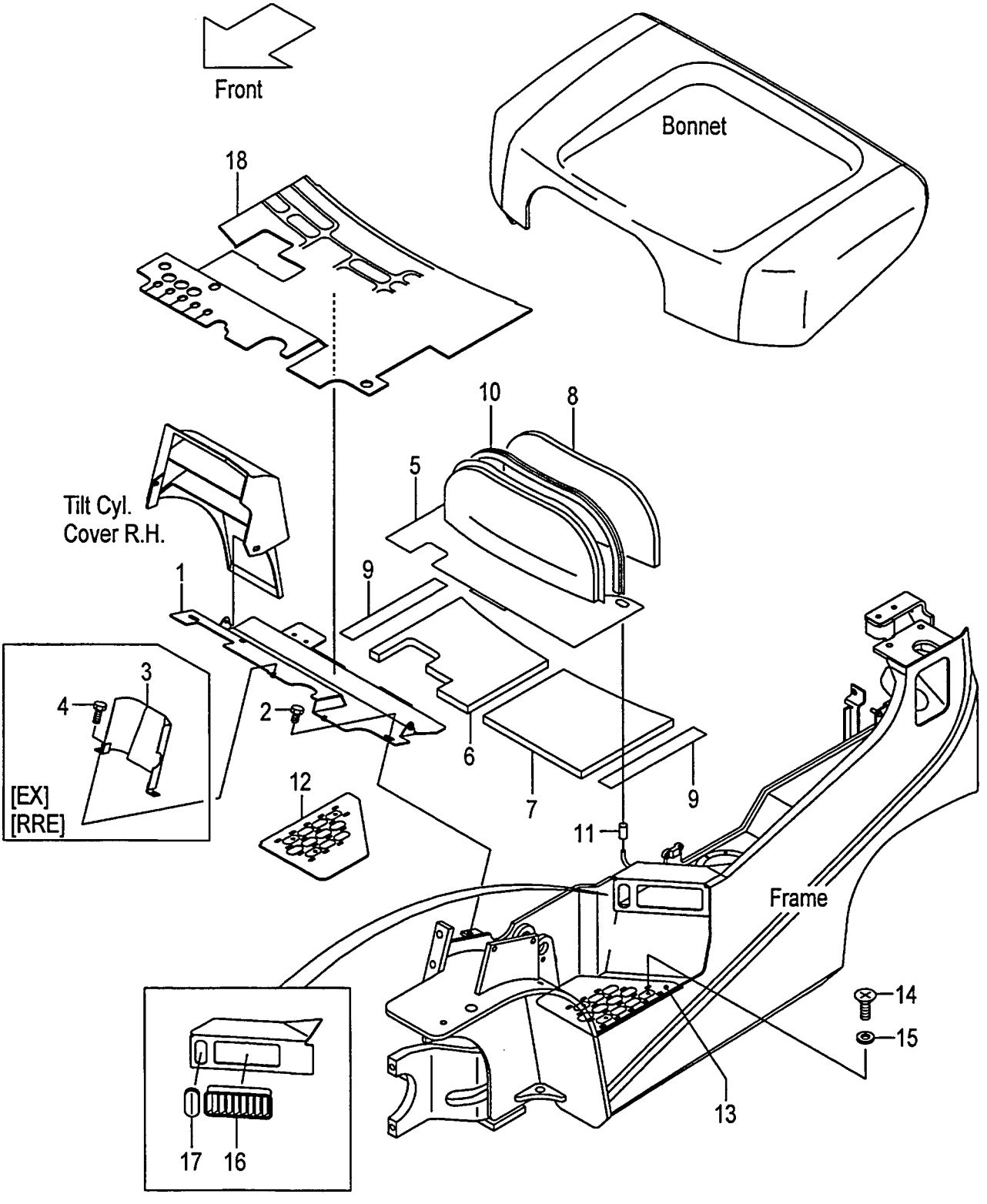

A:FD10C12 FD15C12 FD18C12
B:FD10T12 FD15T12 FD18T12

FIG.125
(F6016440)

Item No	Part No.	Mark	Description		Req'd	Remarks : Serial No.
1	239A6-50112		BOARD,FLOOR,FRONT	ﾎﾞｰﾄﾞ	1	
2	01181-08016		BOLT	ﾎﾞﾙﾄ	2	
3	239A6-52601		COVER,FRONT	ｶﾊﾞｰ	1	A [EX][RRE]
-	239B6-52601		COVER,FRONT	ｶﾊﾞｰ	1	B [EX][RRE]
4	01186-06012		BOLT	ﾎﾞﾙﾄ	2	[EX][RRE]
5	239A6-50302		BOARD,FLOOR,REAR	ﾎﾞｰﾄﾞ	1	A
-	239B6-50302		BOARD,FLOOR,REAR	ﾎﾞｰﾄﾞ	1	B
6	239A6-52131		INSULATOR,REAR,RH	ｲﾝｼｭﾚｰﾀ	1	
7	239A6-52141		INSULATOR,REAR,LH	ｲﾝｼｭﾚｰﾀ	1	
8	216G6-52231		INSULATOR,REAR	ｲﾝｼｭﾚｰﾀ	1	
9	239A6-52171		RUBBER,SEAL	ﾗﾊﾞｰ	2	
10	216G6-52271		EDGING	ｴｯｼﾞﾝｸﾞ	1	
11	216G6-52291		CAP	ｷｬｯﾌﾟ	2	
12	234A6-42042		STEP,NON-SKID,RH	ｽﾃｯﾌﾟ	1	
13	234A6-42072		STEP,NON-SKID,LH	ｽﾃｯﾌﾟ	1	
14	214A6-42911		SCREW	ｽｸﾘｭ	6	
15	02000-20010		WASHER	ﾜｯｼｬ	6	
16	230C1-02041		COVER,AIR-INTAKE	ｶﾊﾞｰ	2	
17	209P7-42161		BOOT,LEVER	ﾌﾞｰﾂ	1	
18	239A6-52231		MAT,FLOOR	ﾏｯﾄ	1	A
-	239B6-52231		MAT,FLOOR	ﾏｯﾄ	1	B

FIG.126 TRAY
(F6016450) トレー

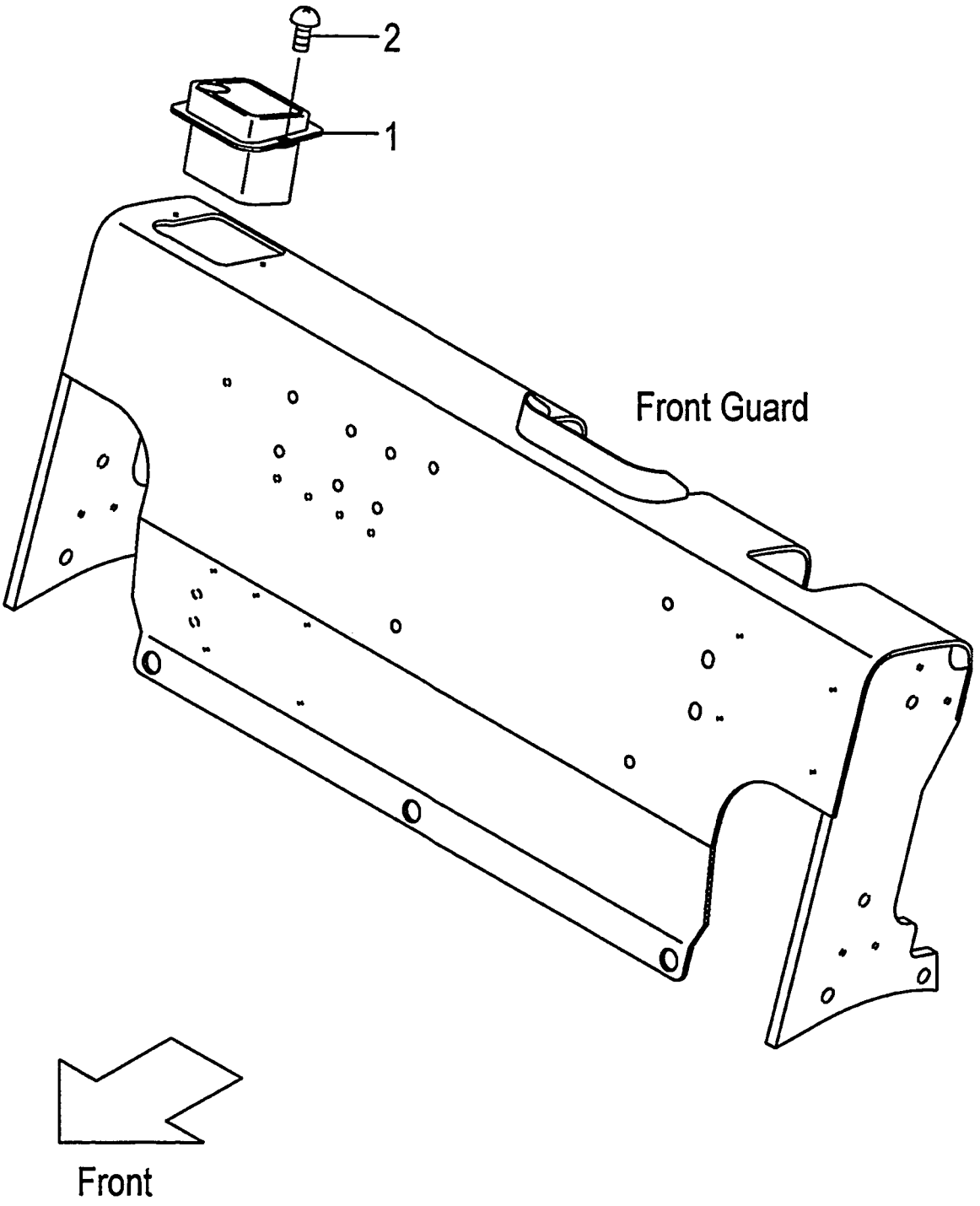

A:FD10C12 FD10T12 FD15C12 FD15T12 FD18C12 FD18T12

Item No	Part No.	Mark	Description	Req'd	Remarks : Serial No.
1	216G9-32001		TRAY トレー	1	
2	214A6-42252		SCREW スクリュ	2	

FIG.127 TRAY [AW071][RWL][LPG][LPO][BB SW][BBASW]

(F6016460) トレー

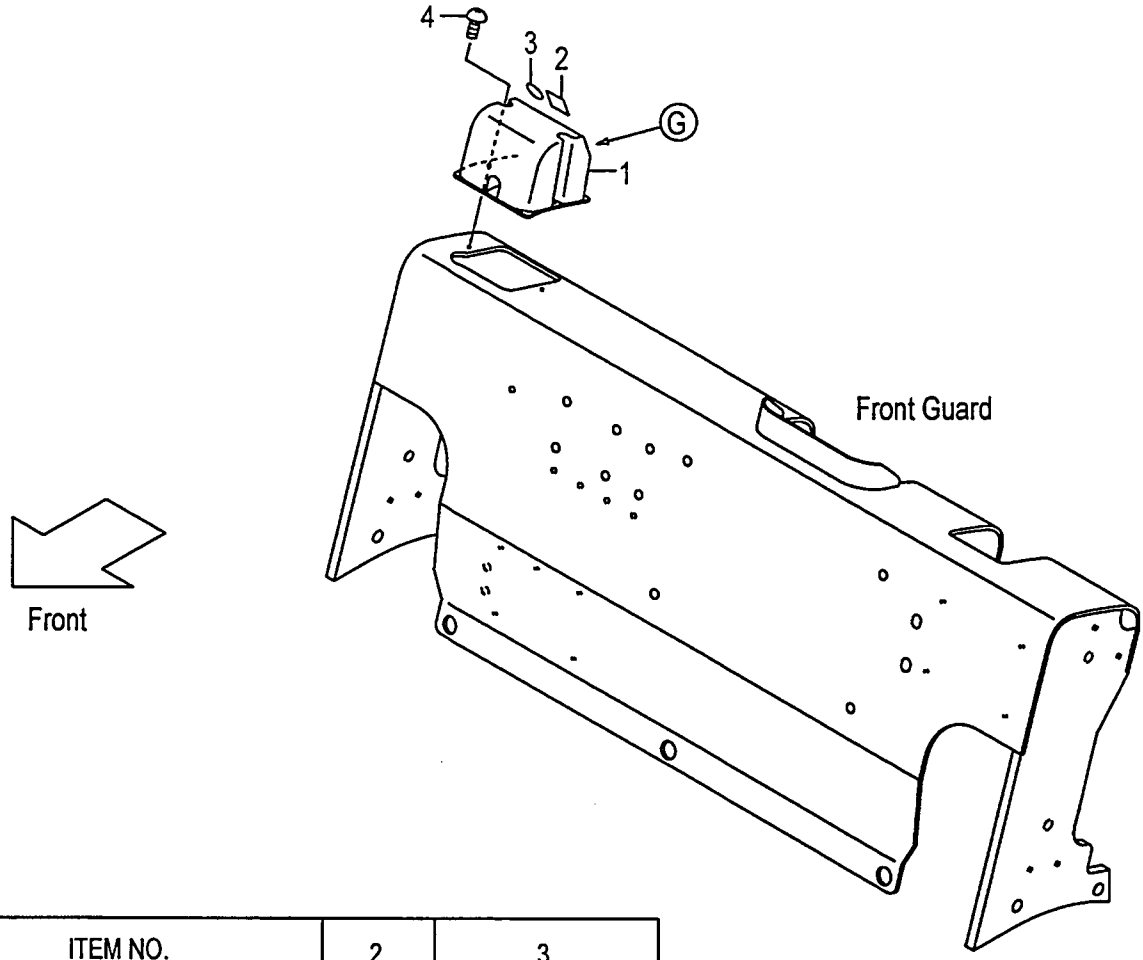

ITEM NO.		2		3			
HOLE		A	B	C	D	E	F
OPTION	[AW]	O	O	O	O		O
	[RWL]	O		O	O	O	
	[BB SW][BBASW]	O	O	O	O		O
	[AW/RWL]	O		O	O		
	[AW/BB SW·BBASW]	O	O		O		O
	[RWL/BB SW·BBASW]	O		O	O		
	[AW/RWL/BB SW·BBASW]	O			O		

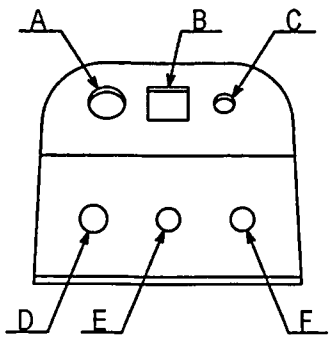

View from G

A:FD10C12 FD10T12 FD15C12 FD15T12 FD18C12 FD18T12

Item No	Part No.	Mark	Description		Req'd	Remarks : Serial No.
1	516G1-42251		BOX,SWITCH	ﾎﾞｯｸｽ	1	[AW071][RWL][BB SW][BBASW]
-	516G1-42251		BOX,SWITCH	ﾎﾞｯｸｽ	1	[AW071/RWL][RWL/BB SW] [RWL/BBASW]
-	516G1-42251		BOX,SWITCH	ﾎﾞｯｸｽ	1	[AW071/BB SW][AW071/BBASW]
-	516G1-42251		BOX,SWITCH	ﾎﾞｯｸｽ	1	[AW071/RWL/BB SW] [AW071/RWL/BBASW]
2	229F6-42201		SEAL,PANEL-COVER,A	ｼｰﾙ	2	[AW071][BB SW][BBASW]
-	229F6-42201		SEAL,PANEL-COVER,A	ｼｰﾙ	1	[RWL]
-	229F6-42201		SEAL,PANEL-COVER,A	ｼｰﾙ	1	[AW071/RWL][RWL/BB SW] [RWL/BBASW]
-	229F6-42201		SEAL,PANEL-COVER,A	ｼｰﾙ	2	[AW071/BB SW][AW071/BBASW]
-	229F6-42201		SEAL,PANEL-COVER,A	ｼｰﾙ	1	[AW071/RWL/BB SW] [AW071/RWL/BBASW]
3	229F6-42211		SEAL,PANEL-COVER,B	ｼｰﾙ	3	[AW071][RWL][BB SW][BBASW]
-	229F6-42211		SEAL,PANEL-COVER,B	ｼｰﾙ	2	[AW071/RWL][RWL/BB SW] [RWL/BBASW]
-	229F6-42211		SEAL,PANEL-COVER,B	ｼｰﾙ	2	[AW071/BB SW][AW071/BBASW]
-	229F6-42211		SEAL,PANEL-COVER,B	ｼｰﾙ	1	[AW071/RWL/BB SW] [AW071/RWL/BBASW]
4	214A6-42252		SCREW	ｽｸﾘｭ	2	[AW071][RWL][BB SW][BBASW]
-	214A6-42252		SCREW	ｽｸﾘｭ	2	[AW071/RWL][RWL/BB SW] [RWL/BBASW]
-	214A6-42252		SCREW	ｽｸﾘｭ	2	[AW071/BB SW][AW071/BBASW]
-	214A6-42252		SCREW	ｽｸﾘｭ	2	[AW071/RWL/BB SW] [AW071/RWL/BBASW]

FIG.128 TRAY [SM][AM][TPM]

(F6016480) トレー

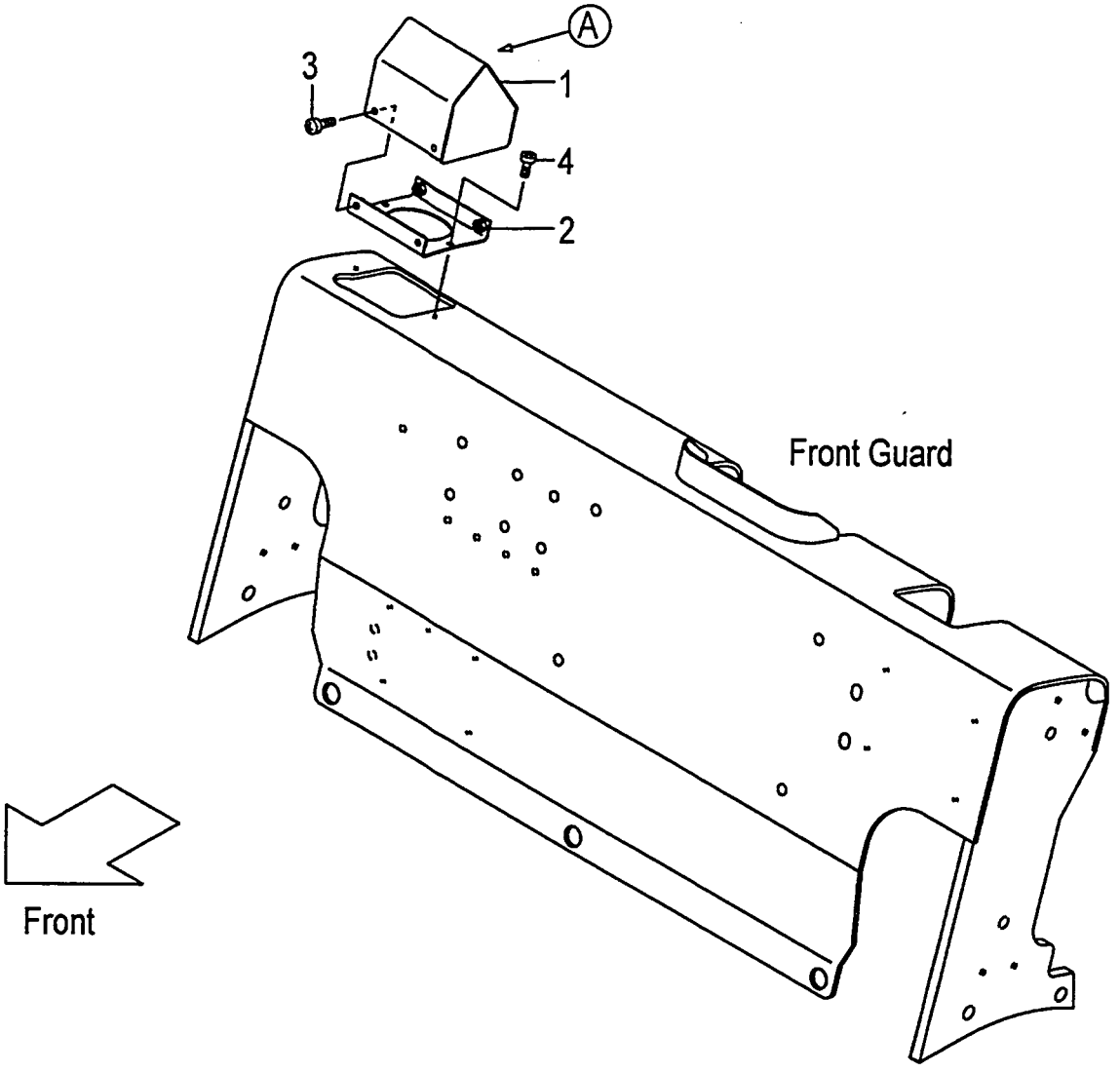

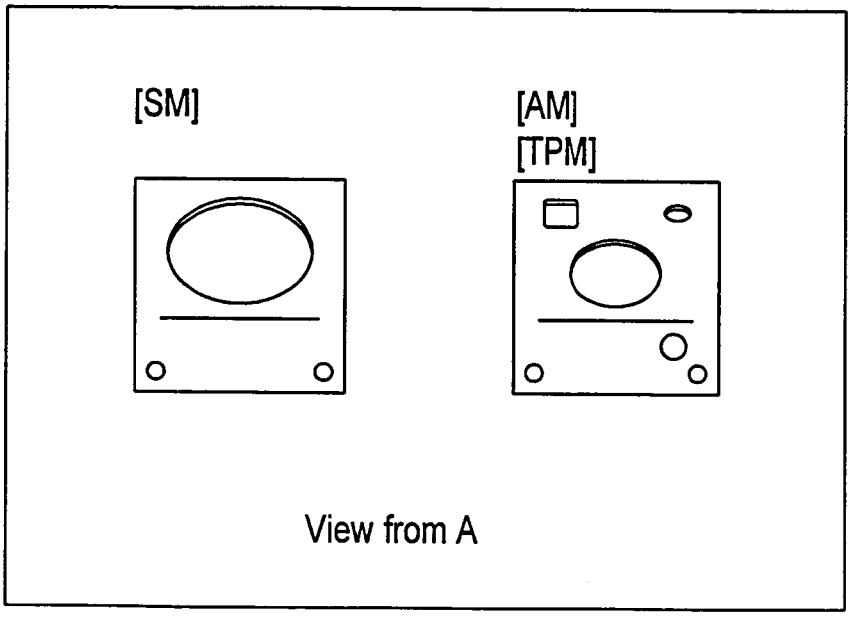

FIG.128

(F6016480)

A:FD10C12 FD10T12 FD15C12 FD15T12 FD18C12 FD18T12

Item No	Part No.	Mark	Description		Req'd	Remarks : Serial No.
1	516G7-50401		BOX,METER	ﾎﾞｯｸｽ	1	[SM]
-	516G6-90401		BOX,METER	ﾎﾞｯｸｽ	1	[AM][TPM]
2	516G1-42021		BRACKET	ﾌﾞﾗｹｯﾄ	1	[SM][AM][TPM]
3	214A6-42771		SCREW	ｽｸﾘｭ	4	[SM][AM][TPM]
4	214A6-42252		SCREW	ｽｸﾘｭ	2	[SM][AM][TPM]

FIG.129 TRAY [SM/(BB SW,BBASW)][SM/(BB SW,BBASW)/RWL]

(F6016490) トレー

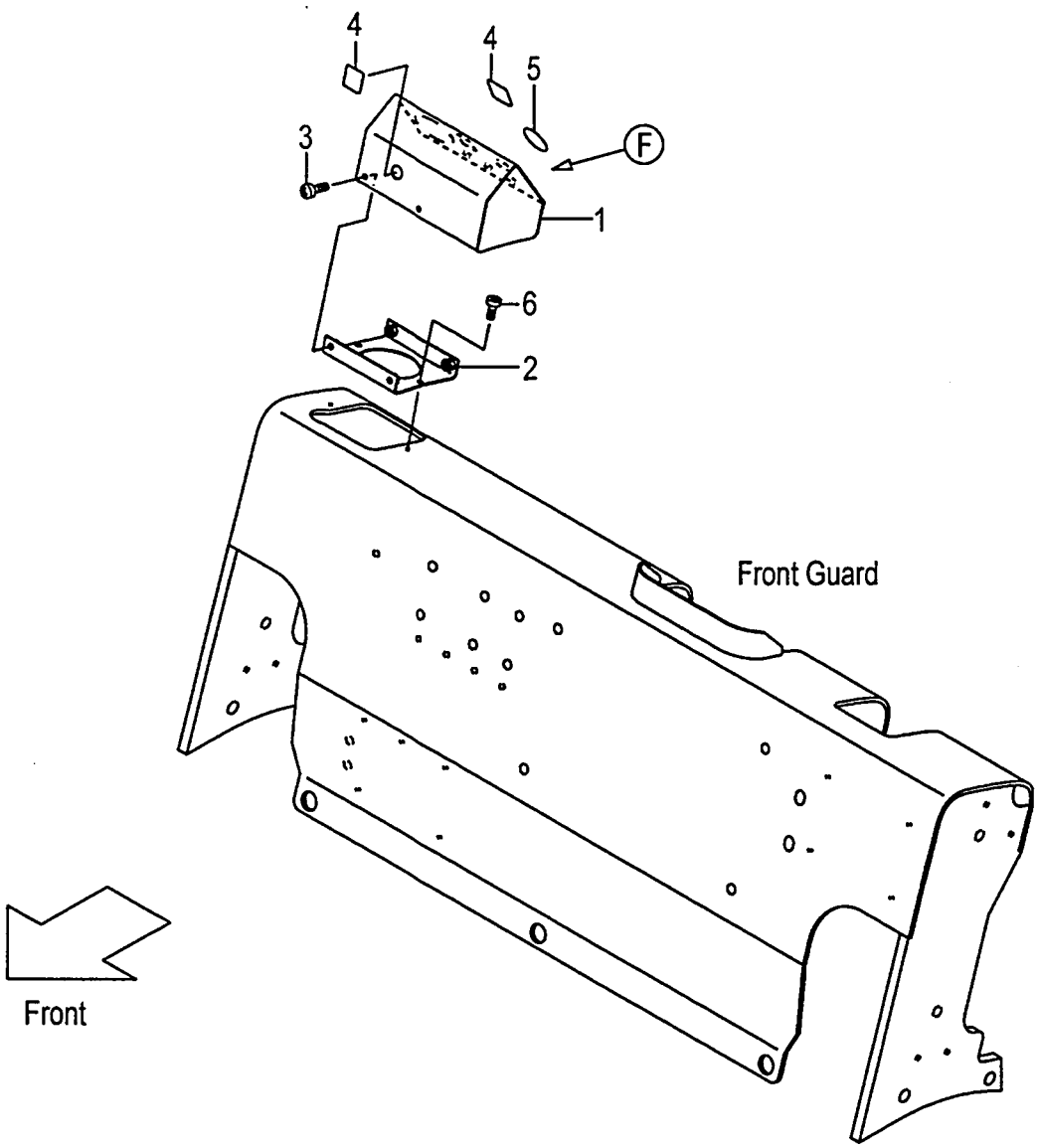

ITEM NO.		4		5		
HOLE		A	B	C	D	E
OPTION	[SM/BB SW·BBASW]	○	○		○	○
	[SM/BB SW·BBASW/RWL]	○			○	

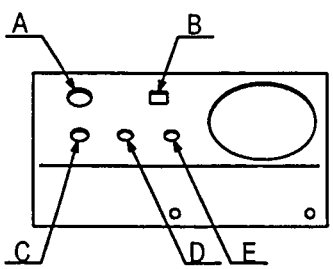

View from F

A:FD10C12 FD10T12 FD15C12 FD15T12 FD18C12 FD18T12

Item No	Part No.	Mark	Description		Req'd	Remarks : Serial No.
1	516G7-50201		BOX,METER & SWITCH	ﾎﾞｯｸｽ	1	[SM/BB SW][SM/BBASW] [SM/BB SW/RWL][SM/BBASW/RWL]
2	516G1-42021		BRACKET	ﾌﾞﾗｹｯﾄ	1	[SM/BB SW][SM/BBASW] [SM/BB SW/RWL][SM/BBASW/RWL]
3	214A6-42771		SCREW	ｽｸﾘｭ	4	[SM/BB SW][SM/BBASW] [SM/BB SW/RWL][SM/BBASW/RWL]
4	229F6-42201		SEAL,PANEL-COVER,A	ｼｰﾙ	3	[SM/BB SW][SM/BBASW]
-	229F6-42201		SEAL,PANEL-COVER,A	ｼｰﾙ	2	[SM/BB SW/RWL][SM/BBASW/RWL]
5	229F6-42211		SEAL,PANEL-COVER,B	ｼｰﾙ	2	[SM/BB SW][SM/BBASW]
-	229F6-42211		SEAL,PANEL-COVER,B	ｼｰﾙ	1	[SM/BB SW/RWL][SM/BBASW/RWL]
6	214A6-42361		SCREW	ｽｸﾘｭ	2	[SM/BB SW][SM/BBASW] [SM/BB SW/RWL][SM/BBASW/RWL]

FIG.130 TRAY [SM/AW071/RWL]

(F60164A0) トレー

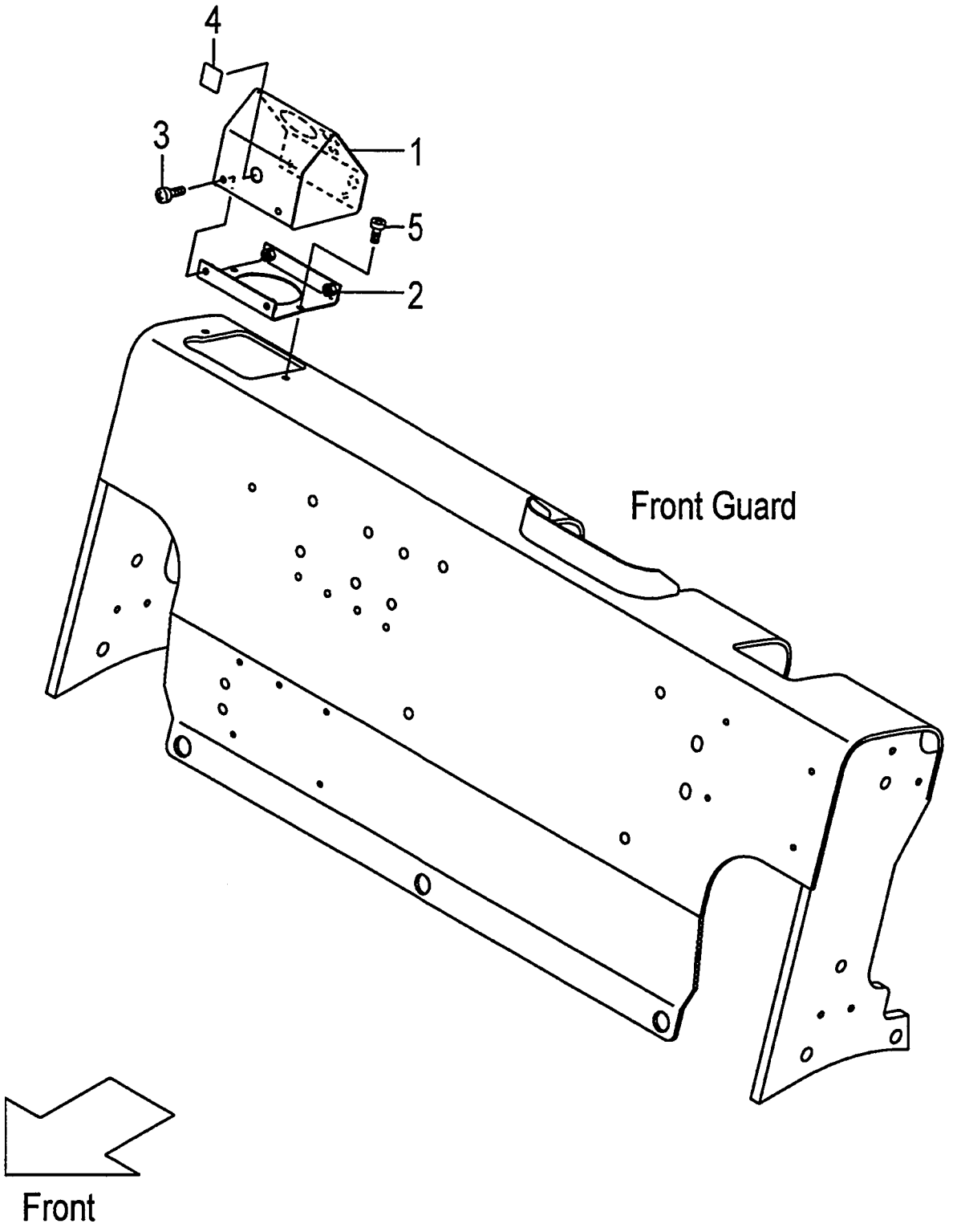

A:FD10C12 FD10T12 FD15C12 FD15T12 FD18C12 FD18T12

Item No	Part No.	Mark	Description		Req'd	Remarks : Serial No.
1	516G7-50211		BOX,METER & SWITCH	ﾎﾞｯｸｽ	1	[SM/AW071/RWL]
2	516G1-42021		BRACKET	ﾌﾞﾗｹｯﾄ	1	[SM/AW071/RWL]
3	214A6-42771		SCREW	ｽｸﾘｭ	4	[SM/AW071/RWL]
4	229F6-42201		SEAL,PANEL-COVER,A	ｼｰﾙ	1	[SM/AW071/RWL]
5	214A6-42361		SCREW	ｽｸﾘｭ	2	[SM/AW071/RWL]

FIG.131 FRONT GUARD BOOT [FC]

(F60164B0) フロントガードブーツ

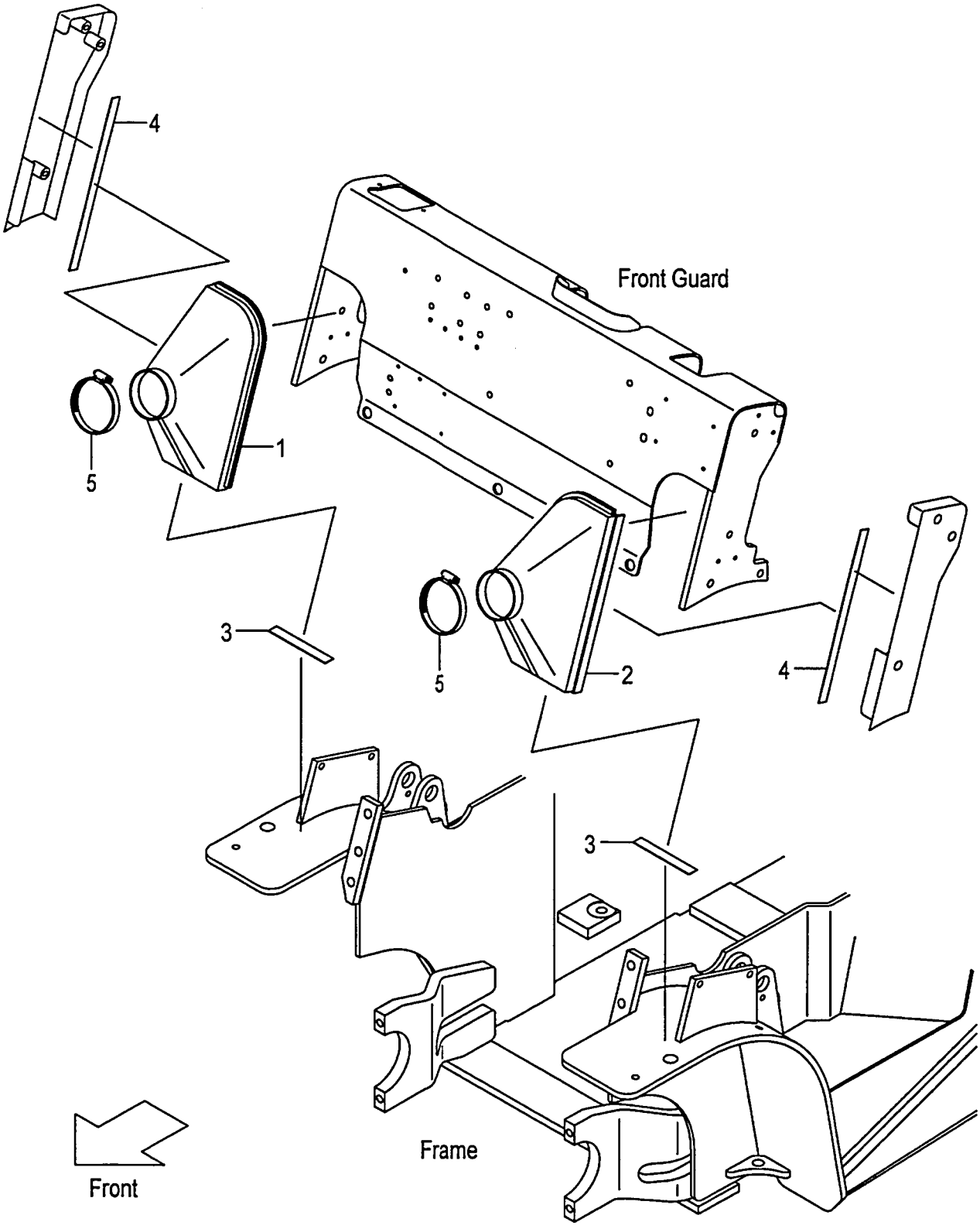

A:FD10C12 FD10T12 FD15C12 FD15T12 FD18C12 FD18T12

Item No	Part No.	Mark	Description		Req'd	Remarks : Serial No.
1	518G3-70202		BOOT,RH	ﾌﾞｰﾂ	1	[FC]
2	518G3-70212		BOOT,LH	ﾌﾞｰﾂ	1	[FC]
3	577H3-72181		TAPE	ﾃｰﾌﾟ	2	[FC]
4	518G3-72301		TAPE	ﾃｰﾌﾟ	2	[FC]
5	539A5-32091		CLAMP,HOSE	ｸﾗﾝﾌﾟ	2	[FC]

FIG.132 SEAT

(F6016810) シート

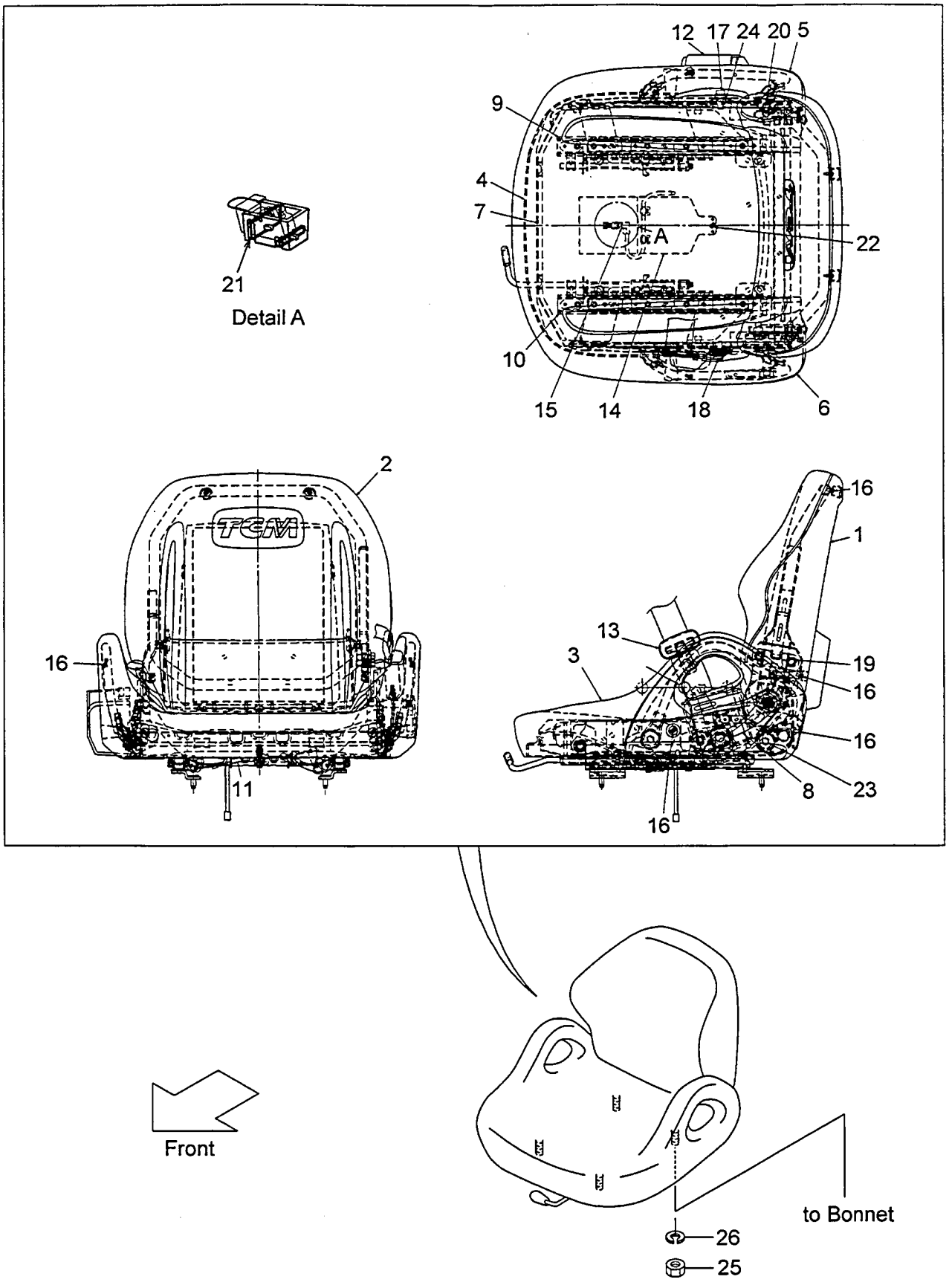

A:FD10C12 FD10T12 FD15C12 FD15T12 FD18C12 FD18T12

Item No	Part No.	Mark	Description		Req'd	Remarks : Serial No.
A1	242F6-80201		SEAT-ASSY	ｼｰﾄｱｯｾﾝ	1	INC.1-13,16-20,23,24
-	542F3-80201		SEAT-ASSY	ｼｰﾄｱｯｾﾝ	1	(SEAT SW) INC.1-24
1	242F6-82001		BOARD,SEAT-BACK	ﾎﾞｰﾄﾞ	1	
2	242F6-82011		PAD,SEAT-BACK	ﾊﾟｯﾄﾞ	1	
3	242F6-82021		PAD,SEAT-CUSHION	ﾊﾟｯﾄﾞ	1	
4	242F6-82031		PANEL,SEAT-CUSHION	ﾊﾟﾈﾙ	1	
5	242F6-82041		SHIELD,RH	ｼｰﾙﾄﾞ	1	
6	242F6-82051		SHIELD,LH	ｼｰﾙﾄﾞ	1	
7	242F6-82061		FRAME	ﾌﾚｰﾑ	1	
8	242F6-82071		LEVER	ﾚﾊﾞｰ	1	
9	242F6-82081		TRACK,RH	ﾄﾗｯｸ	1	
10	242F6-82091		TRACK,LH	ﾄﾗｯｸ	1	
11	242F6-82101		WIRE	ﾜｲﾔ	1	
12	242F6-82111		BELT,SEAT,OUTER	ﾍﾞﾙﾄ	1	
13	242F6-82121		BELT,SEAT,INNER	ﾍﾞﾙﾄ	1	
14	542F3-82001		PLATE,SEAT-CUSHION	ﾌﾟﾚｰﾄ	1	(SEAT SW)
15	542F3-82011		SWITCH,SEAT	ｽｲｯﾁ	1	(SEAT SW)
16	242F6-82151		SCREW	ｽｸﾘｭ	10	
17	242F6-82161		BOLT	ﾎﾞﾙﾄ	1	
18	242F6-82171		BOLT	ﾎﾞﾙﾄ	1	
19	242F6-82181		BOLT	ﾎﾞﾙﾄ	2	
20	242F6-82191		BOLT	ﾎﾞﾙﾄ	1	
21	542F3-82021		CLAMP	ｸﾗﾝﾌﾟ	2	(SEAT SW)
22	242F6-82241		SCREW	ｽｸﾘｭ	1	(SEAT SW)
23	242F6-82261		BOLT	ﾎﾞﾙﾄ	4	
24	242F6-82291		SHAFT,SUS-CONTROL	ｼｬﾌﾄ	1	
25	01400-00008		NUT	ﾅｯﾄ	4	
26	02010-00008		WASHER	ﾜｯｼｬ	4	

FIG.133 SEAT [EX][SUS001]

(F6016820) シート

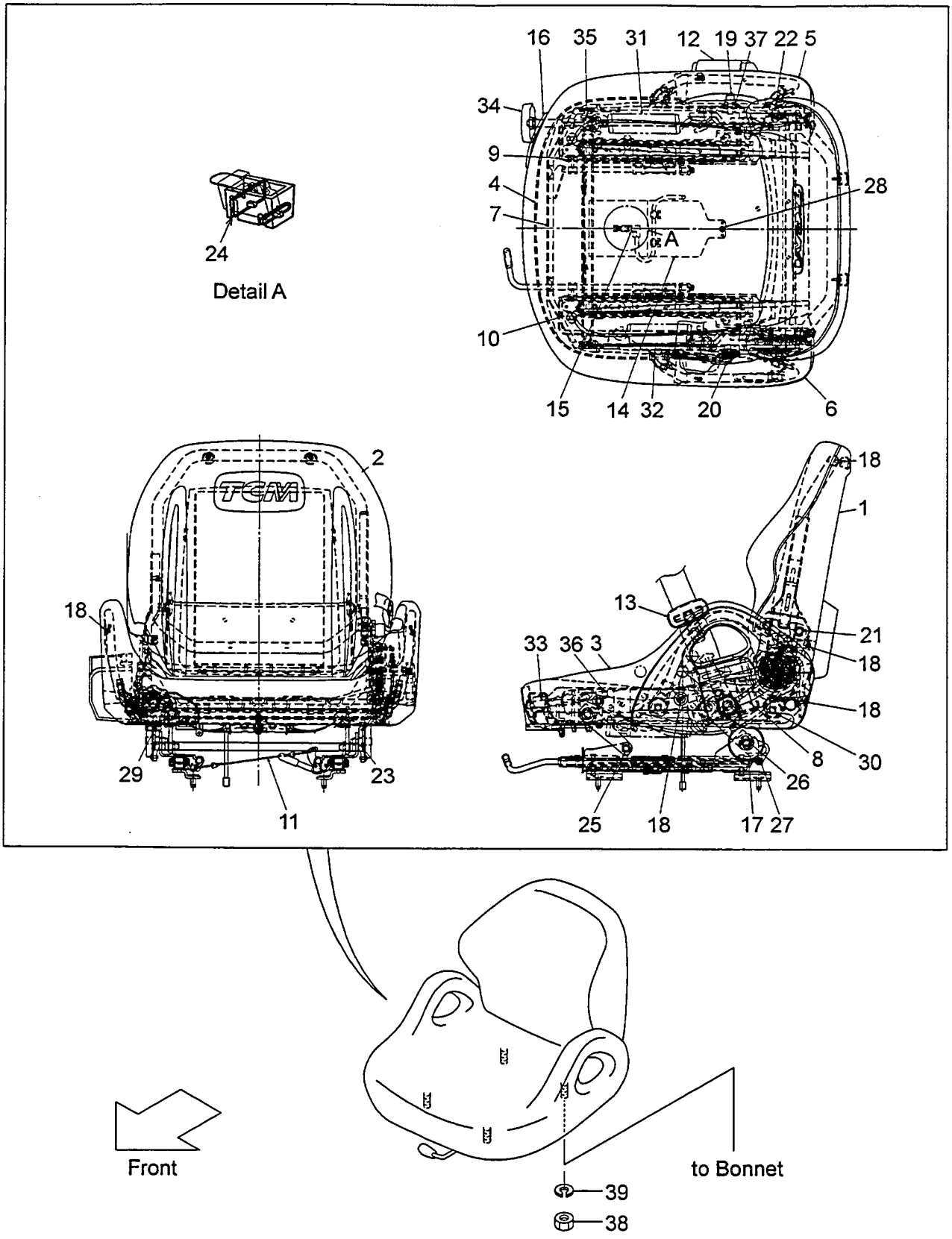

A:FD10C12 FD10T12 FD15C12 FD15T12 FD18C12 FD18T12

Item No	Part No.	Mark	Description		Req'd	Remarks : Serial No.
A1	242F6-80101		SEAT-ASSY	ｼｰﾄｱｯｾﾝ	1	[EX][SUS001]
						INC.1-13,16-23,25-37
-	542F3-80101		SEAT-ASSY	ｼｰﾄｱｯｾﾝ	1	[EX][SUS001](SEAT SW) INC.1-37
1	242F6-82001		BOARD,SEAT-BACK	ﾎﾞｰﾄﾞ	1	[EX][SUS001]
2	242F6-82011		PAD,SEAT-BACK	ﾊﾟｯﾄﾞ	1	[EX][SUS001]
3	242F6-82021		PAD,SEAT-CUSHION	ﾊﾟｯﾄﾞ	1	[EX][SUS001]
4	242F6-82031		PANEL,SEAT-CUSHION	ﾊﾟﾈﾙ	1	[EX][SUS001]
5	242F6-82041		SHIELD,RH	ｼｰﾙﾄﾞ	1	[EX][SUS001]
6	242F6-82051		SHIELD,LH	ｼｰﾙﾄﾞ	1	[EX][SUS001]
7	242F6-82061		FRAME	ﾌﾚｰﾑ	1	[EX][SUS001]
8	242F6-82071		LEVER	ﾚﾊﾞｰ	1	[EX][SUS001]
9	242F6-82081		TRACK,RH	ﾄﾗｯｸ	1	[EX][SUS001]
10	242F6-82091		TRACK,LH	ﾄﾗｯｸ	1	[EX][SUS001]
11	242F6-82101		WIRE	ﾜｲﾔ	1	[EX][SUS001]
12	242F6-82111		BELT,SEAT,OUTER	ﾍﾞﾙﾄ	1	[EX][SUS001]
13	242F6-82121		BELT,SEAT,INNER	ﾍﾞﾙﾄ	1	[EX][SUS001]
14	542F3-82001		PLATE,SEAT-CUSHION	ﾌﾟﾚｰﾄ	1	[EX][SUS001](SEAT SW)
15	542F3-82011		SWITCH,SEAT	ｽｲｯﾁ	1	[EX][SUS001](SEAT SW)
16	242F6-82131		CONTROL,SUSPENSION	ｺﾝﾄﾛｰﾙ	1	[EX][SUS001]
17	242F6-82141		ABSORBER,SUSPENSION	ｱﾌﾞｿｰﾊﾞ	2	[EX][SUS001]
18	242F6-82151		SCREW	ｽｸﾘｭ	10	[EX][SUS001]
19	242F6-82161		BOLT	ﾎﾞﾙﾄ	1	[EX][SUS001]
20	242F6-82171		BOLT	ﾎﾞﾙﾄ	1	[EX][SUS001]
21	242F6-82181		BOLT	ﾎﾞﾙﾄ	2	[EX][SUS001]
22	242F6-82191		BOLT	ﾎﾞﾙﾄ	1	[EX][SUS001]
23	242F6-82201		COLLAR	ｶﾗｰ	4	[EX][SUS001]
24	542F3-82021		CLAMP	ｸﾗﾝﾌﾟ	2	[EX][SUS001](SEAT SW)
25	242F6-82211		BOLT	ﾎﾞﾙﾄ	2	[EX][SUS001]
26	242F6-82221		BOLT	ﾎﾞﾙﾄ	2	[EX][SUS001]
27	242F6-82231		SCREW	ｽｸﾘｭ	4	[EX][SUS001]
28	242F6-82241		SCREW	ｽｸﾘｭ	1	[EX][SUS001](SEAT SW)
29	242F6-82251		SCREW	ｽｸﾘｭ	2	[EX][SUS001]
30	242F6-82261		BOLT	ﾎﾞﾙﾄ	4	[EX][SUS001]
31	242F6-82271		SPRING,TENSION	ｽﾌﾟﾘﾝｸﾞ	1	[EX][SUS001]
32	242F6-82281		SPRING,TENSION	ｽﾌﾟﾘﾝｸﾞ	1	[EX][SUS001]
33	242F6-82291		SHAFT,SUS-CONTROL	ｼｬﾌﾄ	1	[EX][SUS001]
34	242F6-82301		HANDLE,SUS-CONTROL	ﾊﾝﾄﾞﾙ	1	[EX][SUS001]
35	242F6-82311		PIN	ﾋﾟﾝ	1	[EX][SUS001]
36	242F6-82321		NUT	ﾅｯﾄ	1	[EX][SUS001]
37	242F6-82331		WASHER	ﾜｯｼｬ	1	[EX][SUS001]
38	01400-00008		NUT	ﾅｯﾄ	4	[EX][SUS001]
39	02010-00008		WASHER	ﾜｯｼｬ	4	[EX][SUS001]

FIG.134 SEAT [SETD/SEB/EX]

(F6016830) シート

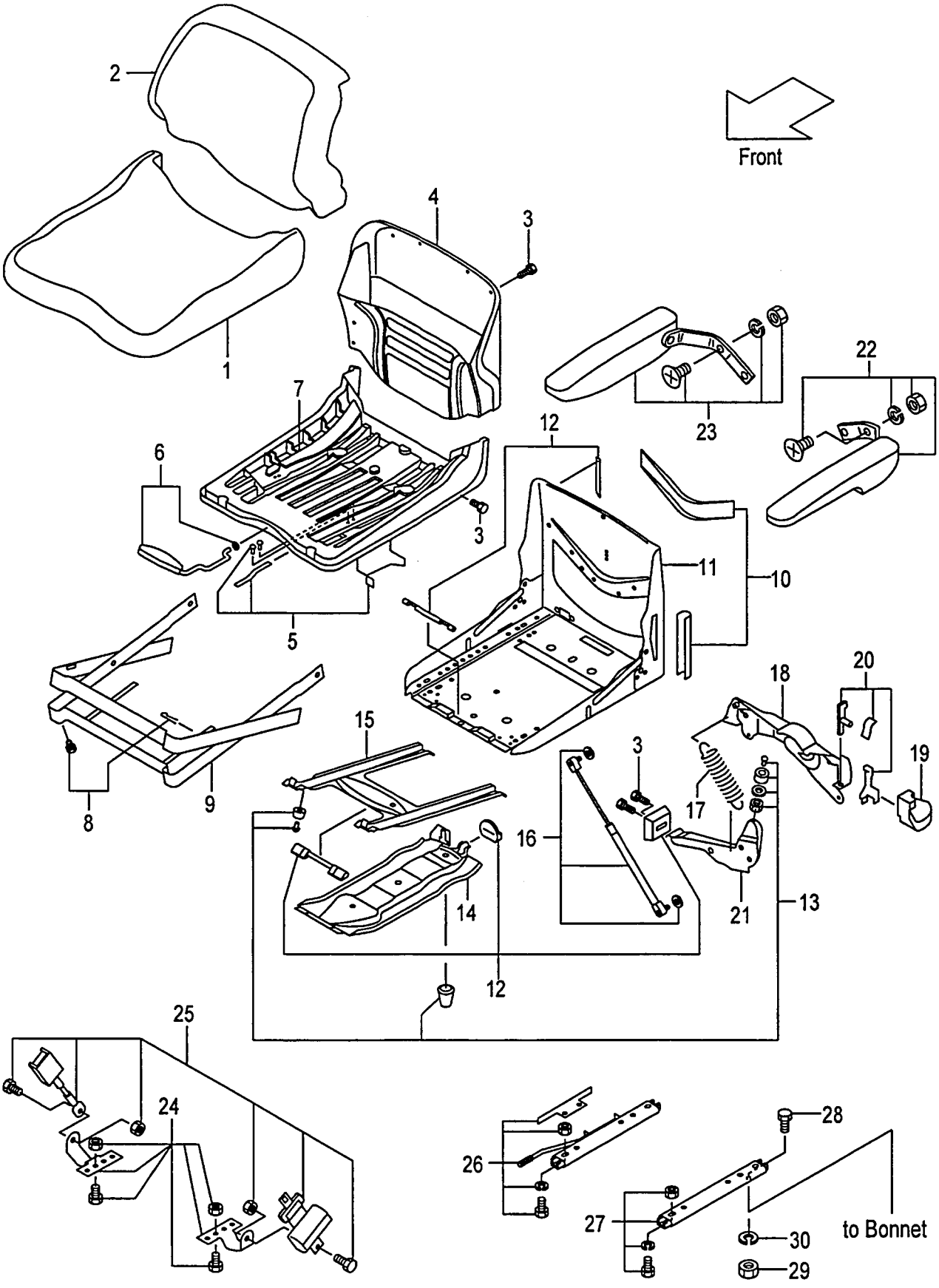

FIG.134
(F6016830)

A:FD10C12 FD10T12 FD15C12 FD15T12 FD18C12 FD18T12

Item No	Part No.	Mark	Description		Req'd	Remarks : Serial No.
A1	534B6-42001		SEAT-ASSY	ｼｰﾄｱｯｾﾝ	1	[SETD/SEB/EX] INC.1-25
1	534A6-42201		CUSHION,SEAT	ｸｯｼｮﾝ	1	[SETD/SEB/EX]
2	534A6-42211		CUSHION,BACKREST	ｸｯｼｮﾝ	1	[SETD/SEB/EX]
3	534A6-42221		FIXTURE	ﾌｨｸｽﾁｬ	3	[SETD/SEB/EX]
4	534A6-42231		PLATE,BACKREST	ﾌﾟﾚｰﾄ	1	[SETD/SEB/EX]
5	534A6-42241		SET,SPRING	ｽﾌﾟﾘﾝｸﾞｾｯﾄ	1	[SETD/SEB/EX]
6	534A6-42251		LEVER,RECLINING	ﾚﾊﾞｰ	1	[SETD/SEB/EX]
7	534A6-42261		PLATE,SEAT	ﾌﾟﾚｰﾄ	1	[SETD/SEB/EX]
8	534A6-42271		FIXTURE,COVER	ﾌｨｸｽﾁｬ	1	[SETD/SEB/EX]
9	534A6-42281		COVER	ｶﾊﾞｰ	1	[SETD/SEB/EX]
10	534A6-42291		FIXTURE,SEAT-FRAME	ﾌｨｸｽﾁｬ	1	[SETD/SEB/EX]
11	534A6-42301		FRAME,SEAT	ﾌﾚｰﾑ	1	[SETD/SEB/EX]
12	534A6-42311		SET,CONSUMABLES	ｺﾝｼｭｰﾏﾌﾞﾙｾｯﾄ	1	[SETD/SEB/EX]
13	534A6-42321		KIT,CUSHION	ｸｯｼｮﾝｷｯﾄ	1	[SETD/SEB/EX]
14	534A6-42331		SPRING,INNER	ｽﾌﾟﾘﾝｸﾞ	1	[SETD/SEB/EX]
15	534A6-42341		SPRING,OUTER	ｽﾌﾟﾘﾝｸﾞ	1	[SETD/SEB/EX]
16	534A6-42351		ABSORBER,SHOCK	ｱﾌﾞｿｰﾊﾞ	1	[SETD/SEB/EX]
17	534A6-42361		SPRING,TENSION	ｽﾌﾟﾘﾝｸﾞ	1	[SETD/SEB/EX]
18	534A6-42371		COVER	ｶﾊﾞｰ	1	[SETD/SEB/EX]
19	534A6-42381		HANDLE	ﾊﾝﾄﾞﾙ	1	[SETD/SEB/EX]
20	534A6-42391		SET,HANDLE	ﾊﾝﾄﾞﾙｾｯﾄ	1	[SETD/SEB/EX]
21	534A6-42401		SET,LEVER	ﾚﾊﾞｰｾｯﾄ	1	[SETD/SEB/EX]
22	534A6-42411		REST,ARM,LH	ﾚｽﾄ	1	[SETD/SEB/EX]
23	534A6-42421		REST,ARM,RH	ﾚｽﾄ	1	[SETD/SEB/EX]
A2	534A6-42451		BELT-ASSY,SEAT	ﾍﾞﾙﾄｱｯｾﾝ	1	[SETD/SEB/EX] INC.24,25
24	534A6-42431		SET,BELT-BRACKET	ﾍﾞﾙﾄﾌﾞﾗｹｯﾄｾｯﾄ	1	[SETD/SEB/EX]
25	534A6-42441		SET,SEAT-BELT	ｼｰﾄﾍﾞﾙﾄｾｯﾄ	1	[SETD/SEB/EX]
26	534A6-42472		RAIL	ﾚｰﾙ	1	[SETD/SEB/EX]
27	534A6-42482		RAIL,LOCK	ﾚｰﾙ	1	[SETD/SEB/EX]
28	01100-08020		BOLT	ﾎﾞﾙﾄ	4	[SETD/SEB/EX]
29	01400-00008		NUT	ﾅｯﾄ	4	[SETD/SEB/EX]
30	02010-00008		WASHER	ﾜｯｼｬ	4	[SETD/SEB/EX]

FIG.135 PUMP UNIT

(F6017120) ﾎﾟﾝﾌﾟﾕﾆｯﾄ

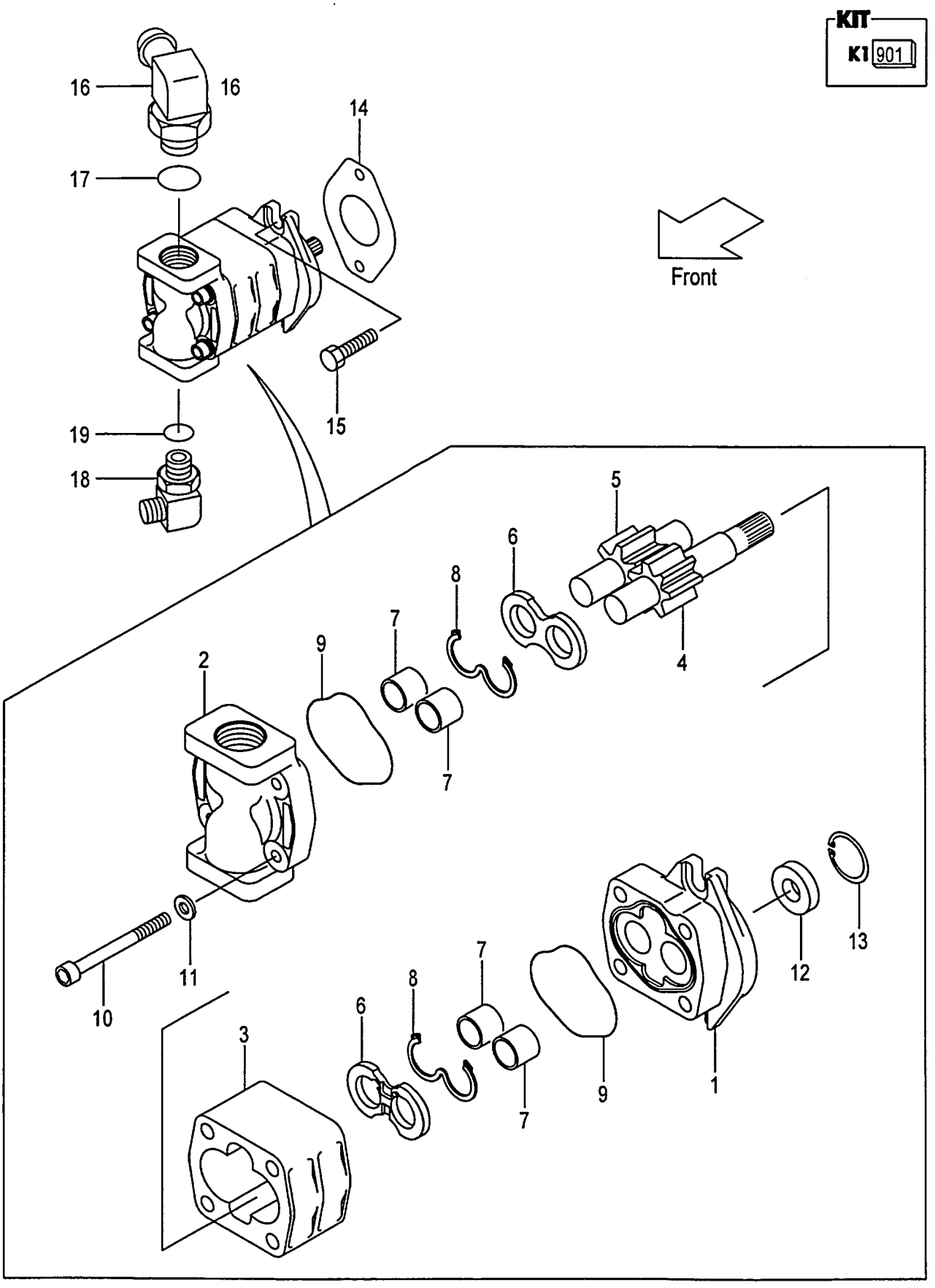

A:FD10C12 FD10T12 FD15C12 FD15T12 FD18C12 FD18T12

Item No	Part No.	Mark	Description		Req'd	Remarks : Serial No.
A1	241G7-10201		PUMP-ASSY,GEAR	ｷﾞﾔｰﾎﾟﾝﾌﾟｱｯｾﾝ	1	INC.1-13
901	R-403-21988	K1	KIT,REPAIR	ﾘﾍﾟｱｷｯﾄ	1	INC.8,9,12,13
1	NO PART NO.	#	COVER,FRONT	ｶﾊﾞｰ	1	
2	NO PART NO.	#	COVER,REAR	ｶﾊﾞｰ	1	
3	NO PART NO.	#	BODY	ﾎﾞﾃﾞｨ	1	
4	NO PART NO.	#	GEAR,DRIVE	ｷﾞﾔｰ	1	
5	NO PART NO.	#	GEAR,DRIVEN	ｷﾞﾔｰ	1	
6	NO PART NO.	#	PLATE,SIDE	ﾌﾟﾚｰﾄ	2	
7	NO PART NO.	#	BUSHING	ﾌﾞｯｼﾝｸﾞ	4	
8	NO PART NO.	#*	GASKET	ｶﾞｽｹｯﾄ	2	
9	NO PART NO.	#*	GASKET	ｶﾞｽｹｯﾄ	2	
10	NO PART NO.	#	BOLT	ﾎﾞﾙﾄ	4	
11	NO PART NO.	#	WASHER	ﾜｯｼｬ	4	
12	NO PART NO.	#*	SEAL,OIL	ｼｰﾙ	1	
13	NO PART NO.	#*	RING,SNAP	ｽﾅｯﾌﾟﾘﾝｸﾞ	1	
14	241G7-12001		PACKING	ﾊﾟｯｷﾝｸﾞ	1	
15	01186-10030		BOLT	ﾎﾞﾙﾄ	2	
A2	214L7-62261		ELBOW-ASSY	ｴﾙﾎﾞｱｯｾﾝ	1	INC.16,17
16	NO PART NO.	#	ELBOW	ｴﾙﾎﾞ	1	
17	03320-00290		O-RING	Oﾘﾝｸﾞ	1	
A3	229F0-91001		ELBOW-ASSY	ｴﾙﾎﾞｱｯｾﾝ	1	INC.18,19
18	NO PART NO.	#	ELBOW	ｴﾙﾎﾞ	1	
19	03320-00240		O-RING	Oﾘﾝｸﾞ	1	

FIG.136 CONTROL VALVE [2SV]

(F6017310) コントロールバルブ

KIT
K1 901

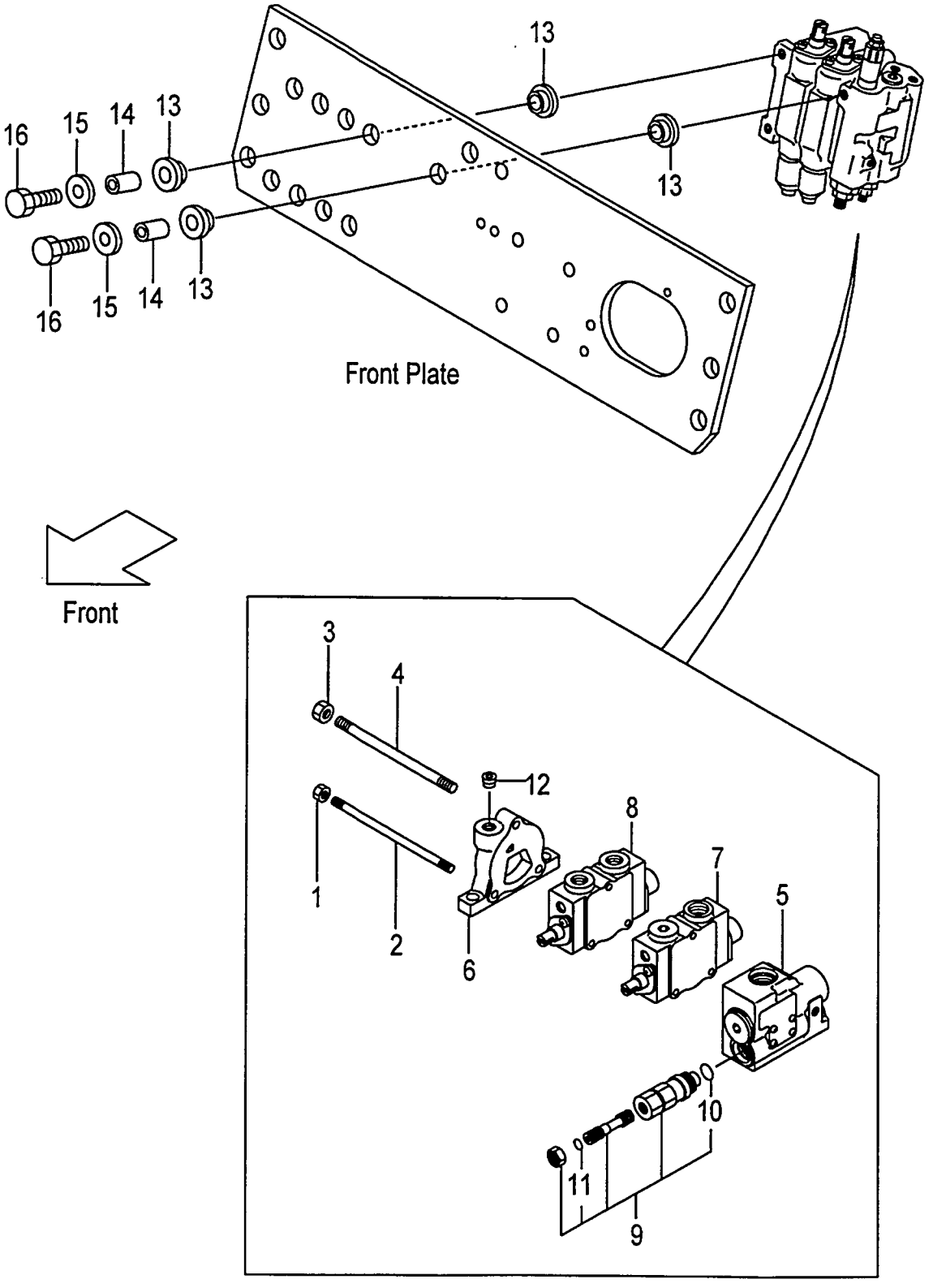

A:FD10C12 FD10T12 FD15C12 FD15T12 FD18C12 FD18T12

Item No	Part No.	Mark	Description		Req'd	Remarks : Serial No.
A1	216G7-30221		VALVE-ASSY,CONTROL	ｺﾝﾄﾛｰﾙﾊﾞﾙﾌﾞｱｯｾﾝ	1	INC.1-12
-	516G4-60202		VALVE-ASSY,CONTROL	ｺﾝﾄﾛｰﾙﾊﾞﾙﾌﾞｱｯｾﾝ	1	[VLS] INC.1-12
901	B-21003-30086	K1	KIT,SEAL	ｼｰﾙｷｯﾄ	1	INC.10,11
1	B-93118-08652		NUT	ﾅｯﾄ	2	
2	B-21011-31106		ROD,TIE	ﾛｯﾄﾞ	2	
3	B-93128-10082		NUT	ﾅｯﾄ	1	
4	B-21011-31105		ROD,TIE	ﾛｯﾄﾞ	1	
5	B-21013-37356		SECTION,INLET	ｲﾝﾚｯﾄｾｸｼｮﾝ	1	SEE FIG.140
-	B-21013-37348		SECTION,INLET	ｲﾝﾚｯﾄｾｸｼｮﾝ	1	[VLS]SEE FIG.140
6	B-21011-30137		SECTION,OUTLET	ｱｳﾄﾚｯﾄｾｸｼｮﾝ	1	
7	B-21013-36432		SECTION,SPOOL	ｽﾌﾟｰﾙｾｸｼｮﾝ	1	(LIFT)SEE FIG.141
8	B-21013-36433		SECTION,SPOOL	ｽﾌﾟｰﾙｾｸｼｮﾝ	1	(TILT)SEE FIG.142
9	63130-25614		VALVE,MAIN-RELIEF	ﾊﾞﾙﾌﾞ	1	INC.10,11
10	NO PART NO.	**	O-RING	Oﾘﾝｸﾞ	1	
11	NO PART NO.	**	O-RING	Oﾘﾝｸﾞ	1	
12	B-97123-02111		PLUG	ﾌﾟﾗｸﾞ	1	
13	216G7-32001		RUBBER,VALVE	ﾗﾊﾞｰ	6	
14	216G7-32011		COLLAR	ｶﾗｰ	3	
15	216G7-32021		WASHER,PLANE	ﾜｯｼｬ	3	
16	216G7-32041		BOLT	ﾎﾞﾙﾄ	3	

FIG.137 CONTROL VALVE [3SV]

(F6017320) コントロールバルブ

KIT

K1 901

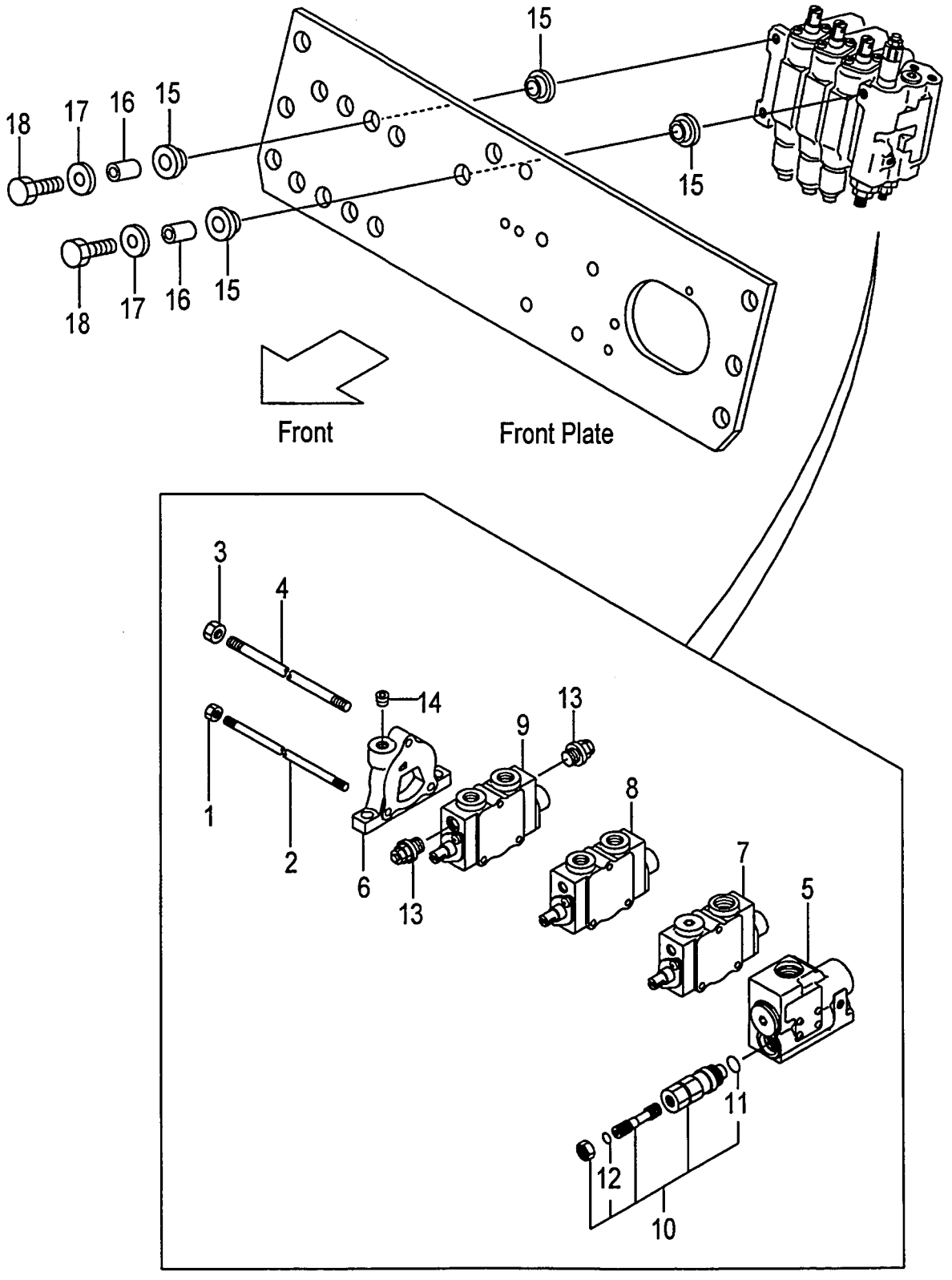

A:FD10C12 FD10T12 FD15C12 FD15T12 FD18C12 FD18T12

Item No	Part No.	Mark	Description		Req'd	Remarks : Serial No.
A1	216G7-30321		VALVE-ASSY,CONTROL	ｺﾝﾄﾛｰﾙﾊﾞﾙﾌﾞｱｯｾﾝ	1	[3SV] INC.1-14
-	516G4-60302		VALVE-ASSY,CONTROL	ｺﾝﾄﾛｰﾙﾊﾞﾙﾌﾞｱｯｾﾝ	1	[3SV/VLS] INC.1-12,14
901	B-21003-30086	K1	KIT,SEAL	ｼｰﾙｷｯﾄ	1	[3SV] INC.11,12
1	B-93118-08652		NUT	ﾅｯﾄ	2	[3SV]
2	B-21021-30104		ROD,TIE	ﾛｯﾄﾞ	2	[3SV]
3	B-93128-10082		NUT	ﾅｯﾄ	1	[3SV]
4	B-21021-30103		ROD,TIE	ﾛｯﾄﾞ	1	[3SV]
5	B-21013-37356		SECTION,INLET	ｲﾝﾚｯﾄｾｸｼｮﾝ	1	[3SV]SEE FIG.140
-	B-21013-37348		SECTION,INLET	ｲﾝﾚｯﾄｾｸｼｮﾝ	1	[3SV/VLS]SEE FIG.140
6	B-21011-30137		SECTION,OUTLET	ｱｳﾄﾚｯﾄｾｸｼｮﾝ	1	[3SV]
7	B-21013-36432		SECTION,SPOOL	ｽﾌﾟｰﾙｾｸｼｮﾝ	1	[3SV](LIFT)SEE FIG.141
8	B-21013-36433		SECTION,SPOOL	ｽﾌﾟｰﾙｾｸｼｮﾝ	1	[3SV](TILT)SEE FIG.142
9	B-21013-39701		SECTION,SPOOL	ｽﾌﾟｰﾙｾｸｼｮﾝ	1	[3SV](3RD)SEE FIG.143
-	B-21013-36434		SECTION,SPOOL	ｽﾌﾟｰﾙｾｸｼｮﾝ	1	[3SV/VLS](3RD)SEE FIG.143
10	63130-25614		VALVE,MAIN-RELIEF	ﾊﾞﾙﾌﾞ	1	[3SV] INC.11,12
11	NO PART NO.	#*	O-RING	Oﾘﾝｸﾞ	1	[3SV]
12	NO PART NO.	#*	O-RING	Oﾘﾝｸﾞ	1	[3SV]
13	B-C0003-30301		VALVE,SHUT-OFF	ﾊﾞﾙﾌﾞ	2	[3SV](WITHOUT 3SV/VLS)
14	B-97123-02111		PLUG	ﾌﾟﾗｸﾞ	1	[3SV]
15	216G7-32001		RUBBER,VALVE	ﾗﾊﾞｰ	6	[3SV]
16	216G7-32011		COLLAR	ｶﾗｰ	3	[3SV]
17	216G7-32021		WASHER,PLANE	ﾜｯｼｬ	3	[3SV]
18	216G7-32041		BOLT	ﾎﾞﾙﾄ	3	[3SV]

FIG.138 CONTROL VALVE [4SV]

(F6017330) コントロールバルブ

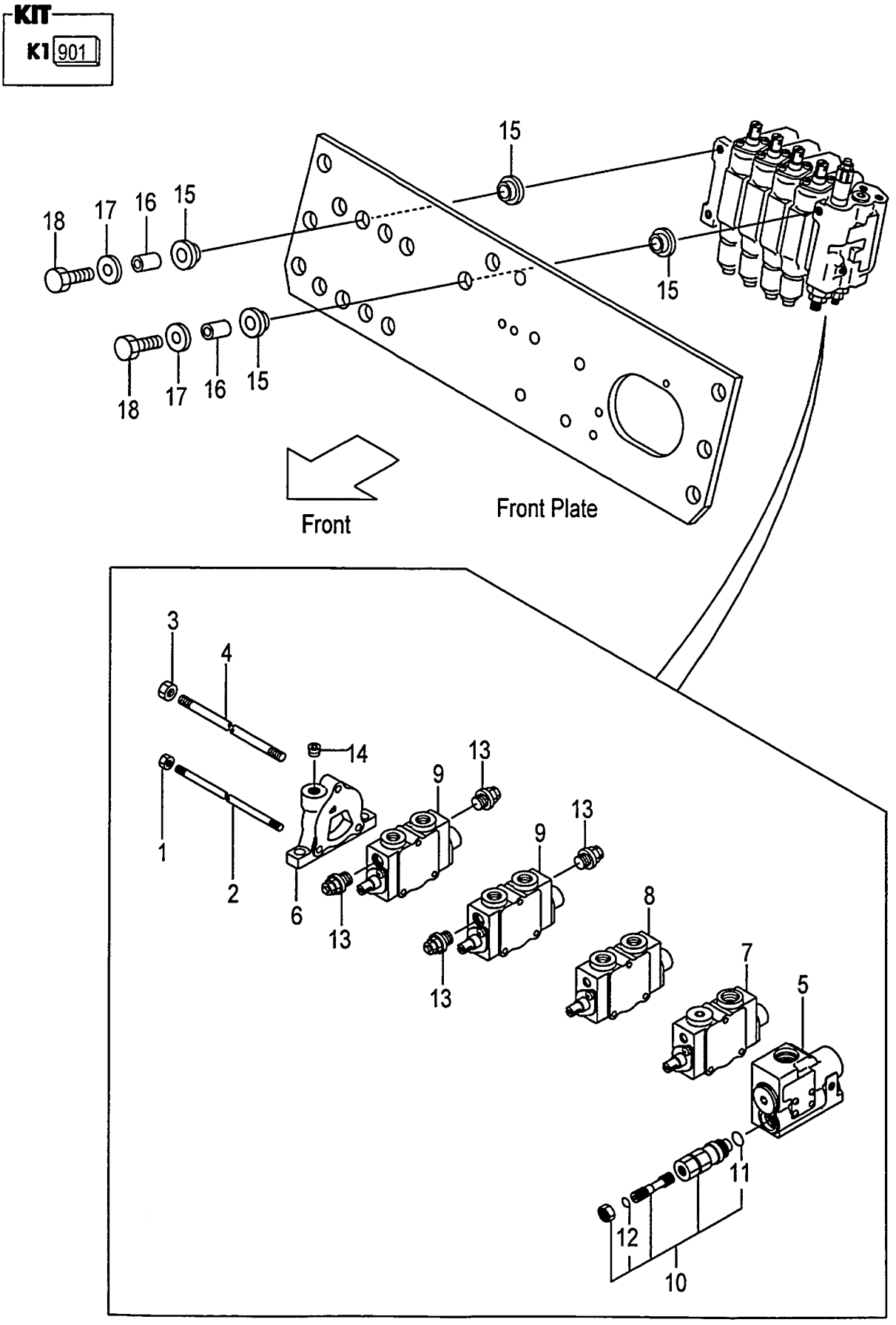

A:FD10C12 FD10T12 FD15C12 FD15T12 FD18C12 FD18T12

Item No	Part No.	Mark	Description		Req'd	Remarks : Serial No.
A1	216G7-30421		VALVE-ASSY,CONTROL	ｺﾝﾄﾛｰﾙﾊﾞﾙﾌﾞｱｯｾﾝ	1	[4SV] INC.1-14
-	516G4-60402		VALVE-ASSY,CONTROL	ｺﾝﾄﾛｰﾙﾊﾞﾙﾌﾞｱｯｾﾝ	1	[4SV/VLS] INC.1-12,14
901	B-21003-30086	K1	KIT,SEAL	ｼｰﾙｷｯﾄ	1	[4SV] INC.11,12
1	B-93118-08652		NUT	ﾅｯﾄ	2	[4SV]
2	B-21031-30104		ROD,TIE	ﾛｯﾄﾞ	2	[4SV]
3	B-93128-10082		NUT	ﾅｯﾄ	1	[4SV]
4	B-21031-30103		ROD,TIE	ﾛｯﾄﾞ	1	[4SV]
5	B-21013-37356		SECTION,INLET	ｲﾝﾚｯﾄｾｸｼｮﾝ	1	[4SV]SEE FIG.140
-	B-21013-37348		SECTION,INLET	ｲﾝﾚｯﾄｾｸｼｮﾝ	1	[4SV/VLS]SEE FIG.140
6	B-21011-30137		SECTION,OUTLET	ｱｳﾄﾚｯﾄｾｸｼｮﾝ	1	[4SV]
7	B-21013-36432		SECTION,SPOOL	ｽﾌﾟｰﾙｾｸｼｮﾝ	1	[4SV](LIFT)SEE FIG.141
8	B-21013-36433		SECTION,SPOOL	ｽﾌﾟｰﾙｾｸｼｮﾝ	1	[4SV](TILT)SEE FIG.142
9	B-21013-39701		SECTION,SPOOL	ｽﾌﾟｰﾙｾｸｼｮﾝ	2	[4SV](3RD,4TH)SEE FIG.143
-	B-21013-36434		SECTION,SPOOL	ｽﾌﾟｰﾙｾｸｼｮﾝ	2	[4SV/VLS](3RD,4TH)SEE FIG.143
10	63130-25614		VALVE,MAIN-RELIEF	ﾊﾞﾙﾌﾞ	1	[4SV] INC.11,12
11	NO PART NO.	**	O-RING	Oﾘﾝｸﾞ	1	[4SV]
12	NO PART NO.	**	O-RING	Oﾘﾝｸﾞ	1	[4SV]
13	B-C0003-30301		VALVE,SHUT-OFF	ﾊﾞﾙﾌﾞ	4	[4SV](WITHOUT 4SV/VLS)
14	B-97123-02111		PLUG	ﾌﾟﾗｸﾞ	1	[4SV]
15	216G7-32001		RUBBER,VALVE	ﾗﾊﾞｰ	6	[4SV]
16	216G7-32011		COLLAR	ｶﾗｰ	3	[4SV]
17	216G7-32021		WASHER,PLANE	ﾜｯｼｬ	3	[4SV]
18	216G7-32041		BOLT	ﾎﾞﾙﾄ	3	[4SV]

FIG.139 CONTROL VALVE [5SV]

(F6017340) コントロールバルブ

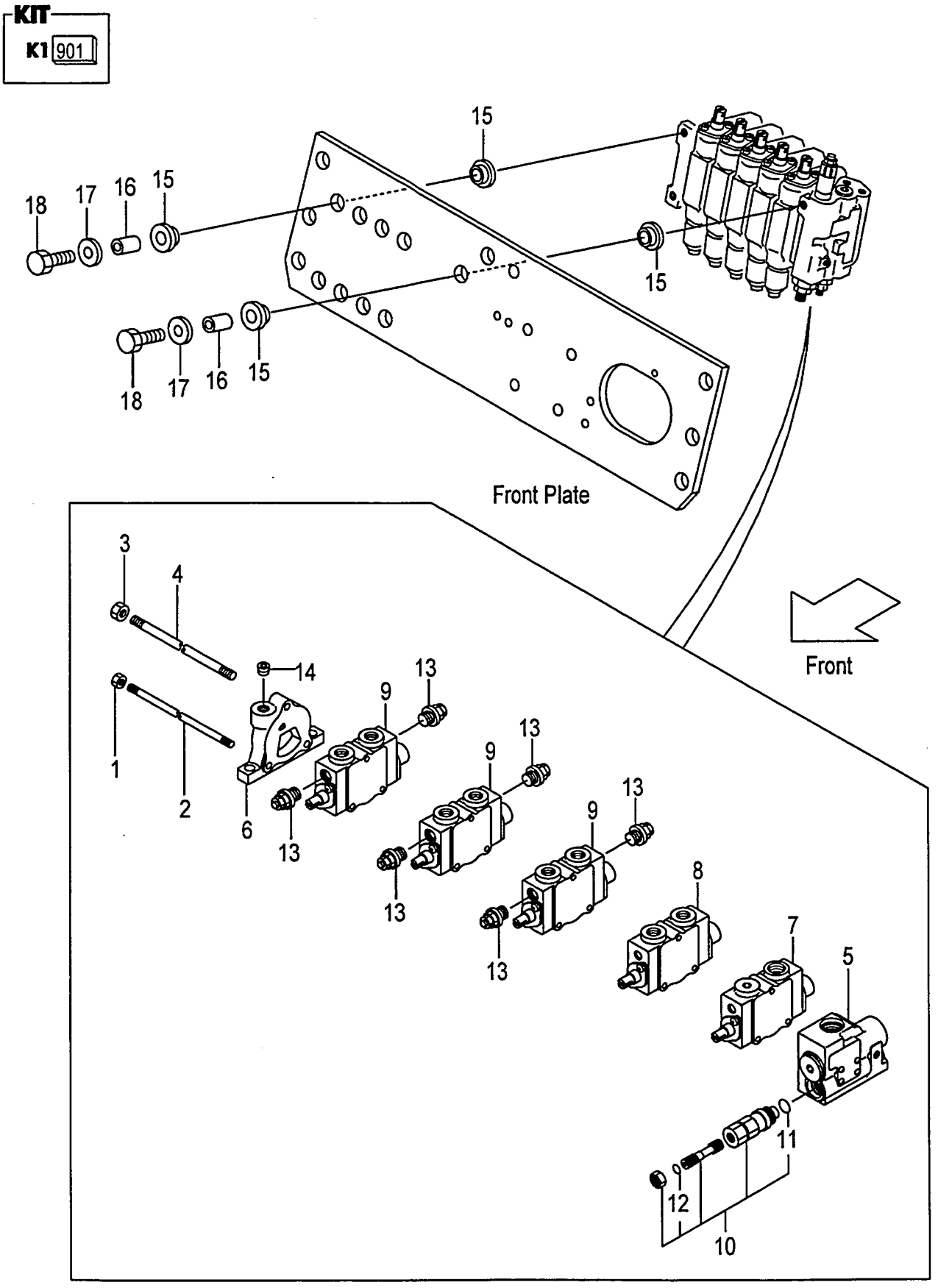

A:FD10C12 FD10T12 FD15C12 FD15T12 FD18C12 FD18T12

Item No	Part No.	Mark	Description		Req'd	Remarks : Serial No.
A1	218G7-30521		VALVE-ASSY,CONTROL	ｺﾝﾄﾛｰﾙﾊﾞﾙﾌﾞｱｯｾﾝ	1	[5SV] INC.1-14
-	518G4-60501		VALVE-ASSY,CONTROL	ｺﾝﾄﾛｰﾙﾊﾞﾙﾌﾞｱｯｾﾝ	1	[5SV/VLS] INC.1-12,14
901	B-21003-30086	K1	KIT,SEAL	ｼｰﾙｷｯﾄ	1	[5SV] INC.11,12
1	B-93118-08652		NUT	ﾅｯﾄ	2	[5SV]
2	B-21041-30104		ROD,TIE	ﾛｯﾄﾞ	2	[5SV]
3	B-93128-10082		NUT	ﾅｯﾄ	1	[5SV]
4	B-21041-30103		ROD,TIE	ﾛｯﾄﾞ	1	[5SV]
5	B-21013-37356		SECTION,INLET	ｲﾝﾚｯﾄｾｸｼｮﾝ	1	[5SV]SEE FIG.140
-	B-21013-37348		SECTION,INLET	ｲﾝﾚｯﾄｾｸｼｮﾝ	1	[5SV/VLS]SEE FIG.140
6	B-21011-30137		SECTION,OUTLET	ｱｳﾄﾚｯﾄｾｸｼｮﾝ	1	[5SV]
7	B-21013-36432		SECTION,SPOOL	ｽﾌﾟｰﾙｾｸｼｮﾝ	1	[5SV](LIFT)SEE FIG.141
8	B-21013-36433		SECTION,SPOOL	ｽﾌﾟｰﾙｾｸｼｮﾝ	1	[5SV](TILT)SEE FIG.142
9	B-21013-39701		SECTION,SPOOL	ｽﾌﾟｰﾙｾｸｼｮﾝ	3	[5SV](3RD,4TH,5TH)SEE FIG.143
-	B-21013-36434		SECTION,SPOOL	ｽﾌﾟｰﾙｾｸｼｮﾝ	3	[5SV/VLS](3RD,4TH,5TH) SEE FIG.143
10	63130-25614		VALVE,MAIN-RELIEF	ﾊﾞﾙﾌﾞ	1	[5SV] INC.11,12
11	NO PART NO.	**	O-RING	Oﾘﾝｸﾞ	1	[5SV]
12	NO PART NO.	**	O-RING	Oﾘﾝｸﾞ	1	[5SV]
13	B-C0003-30301		VALVE,SHUT-OFF	ﾊﾞﾙﾌﾞ	6	[5SV](WITHOUT 5SV/VLS)
14	B-97123-02111		PLUG	ﾌﾟﾗｸﾞ	1	[5SV]
15	216G7-32001		RUBBER,VALVE	ﾗﾊﾞｰ	6	[5SV]
16	216G7-32011		COLLAR	ｶﾗｰ	3	[5SV]
17	216G7-32021		WASHER,PLANE	ﾜｯｼｬ	3	[5SV]
18	216G7-32041		BOLT	ﾎﾞﾙﾄ	3	[5SV]

FIG.140 INLET SECTION
(F6017350) インレットセクション

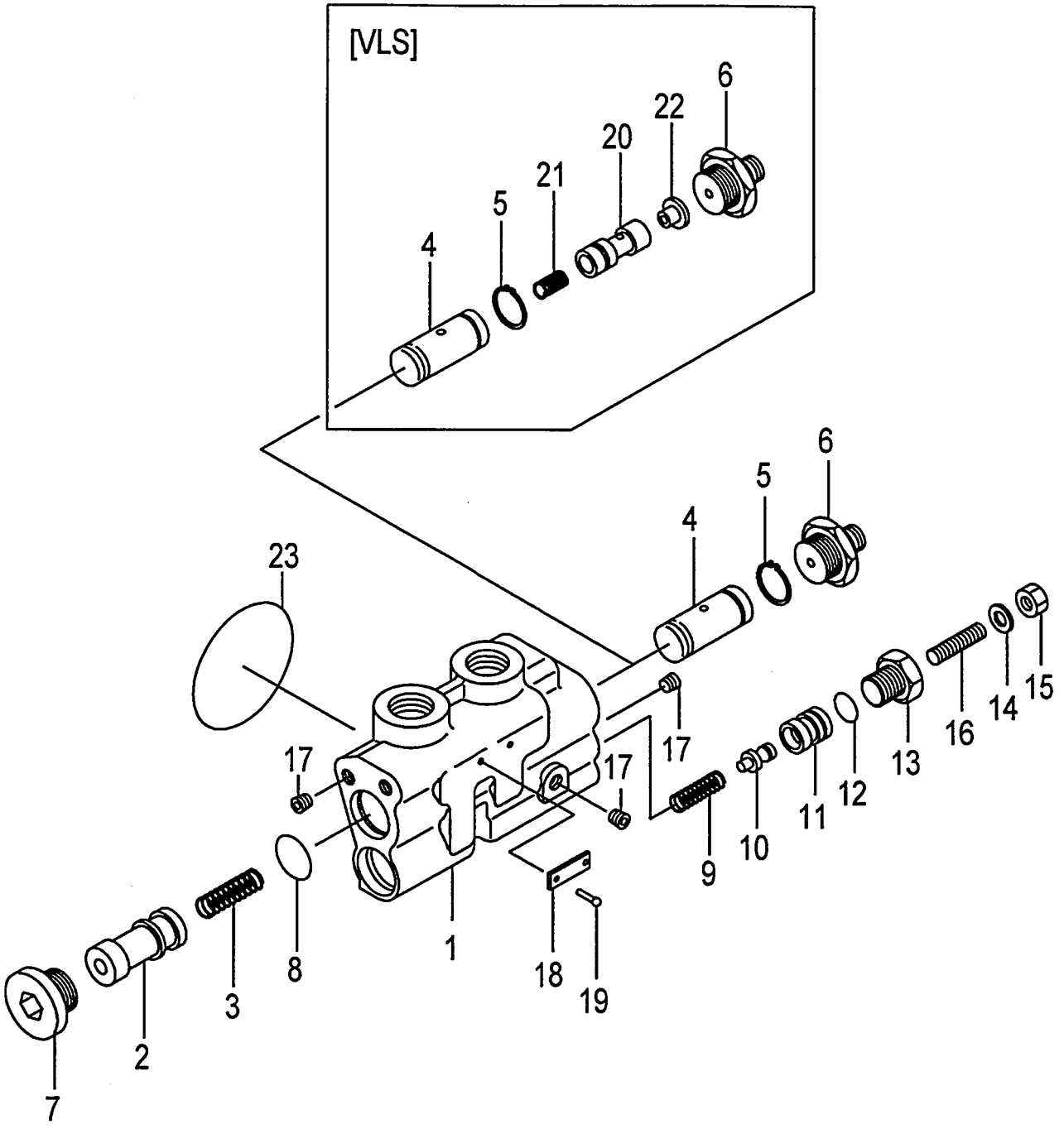

A:FD10C12 FD10T12 FD15C12 FD15T12 FD18C12 FD18T12

Item No	Part No.	Mark	Description		Req'd	Remarks : Serial No.
A1	B-21013-37356		SECTION-ASSY,INLET	ｲﾝﾚｯﾄｾｸｼｮﾝｱｯｾﾝ	1	INC.1-19,23
-	B-21013-37348		SECTION-ASSY,INLET	ｲﾝﾚｯﾄｾｸｼｮﾝｱｯｾﾝ	1	[VLS] INC.1-23
1	NO PART NO.	#	HOUSING,INLET	ﾊｳｼﾞﾝｸﾞ	1	
2	NO PART NO.	#	SPOOL	ｽﾌﾟｰﾙ	1	
3	B-21731-30802		SPRING	ｽﾌﾟﾘﾝｸﾞ	1	
4	NO PART NO.	#	SLEEVE	ｽﾘｰﾌﾞ	1	
-	NO PART NO.	#	SLEEVE	ｽﾘｰﾌﾞ	1	[VLS]
5	B-21001-01452		RING,SNAP	ｽﾅｯﾌﾟﾘﾝｸﾞ	1	
6	B-21733-40207		CONNECTOR-ASSY	ｺﾈｸﾀｱｯｾﾝ	1	
7	B-21731-30613		PLUG	ﾌﾟﾗｸﾞ	1	
8	B-95113-02400		O-RING	Oﾘﾝｸﾞ	1	
9	B-21731-30306		SPRING	ｽﾌﾟﾘﾝｸﾞ	1	
10	B-21731-30502		POPPET	ﾎﾟﾍﾟｯﾄ	1	
11	B-21731-30703		HOUSING	ﾊｳｼﾞﾝｸﾞ	1	
-	B-21731-30704		HOUSING	ﾊｳｼﾞﾝｸﾞ	1	[VLS]
12	B-95111-01200		O-RING	Oﾘﾝｸﾞ	1	
13	B-21731-30612		PLUG	ﾌﾟﾗｸﾞ	1	
14	B-94101-08201		WASHER	ﾜｯｼｬ	1	
15	B-93364-08052		NUT	ﾅｯﾄ	1	
16	B-91511-08351		SCREW	ｽｸﾘｭ	1	
-	B-91511-08301		SCREW	ｽｸﾘｭ	1	[VLS]
17	B-97123-01111		PLUG	ﾌﾟﾗｸﾞ	4	
18	NO PART NO.	#	PLATE,NAME	ﾌﾟﾚｰﾄ	1	
19	NO PART NO.	#	SCREW	ｽｸﾘｭ	2	
20	NO PART NO.	#	PISTON	ﾋﾟｽﾄﾝ	1	[VLS]
21	B-21731-30308		SPRING	ｽﾌﾟﾘﾝｸﾞ	1	[VLS]
22	B-21731-31201		DAMPER	ﾀﾞﾝﾊﾟ	1	[VLS]
23	B-21001-00106		O-RING	Oﾘﾝｸﾞ	1	

FIG.141 SPOOL SECTION (LIFT)

(F6017360) スプールセクション

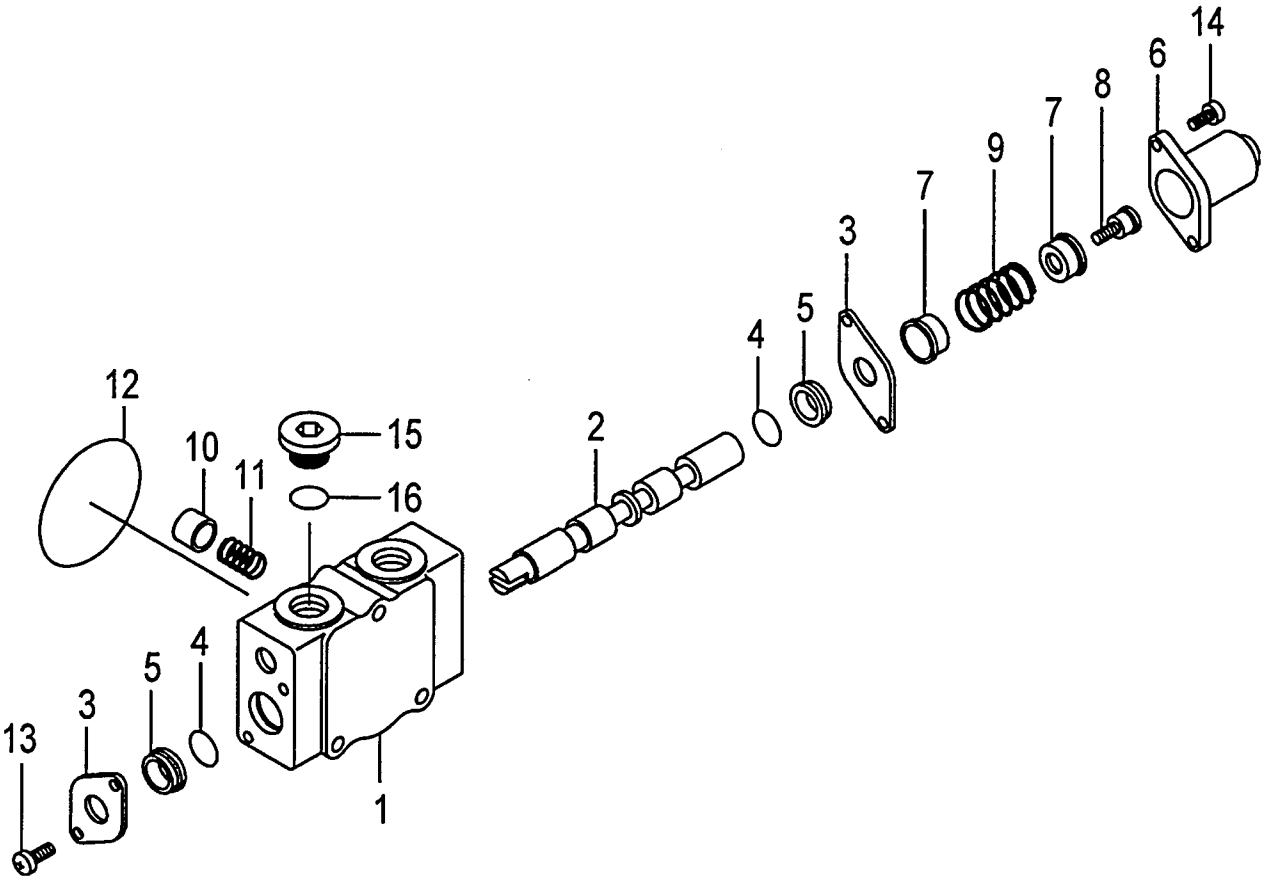

A:FD10C12 FD10T12 FD15C12 FD15T12 FD18C12 FD18T12

Item No	Part No.	Mark	Description		Req'd	Remarks : Serial No.
A1	B-21013-36432		SECTION-ASSY,SPOOL	ｽﾌﾟｰﾙｾｸｼｮﾝｱｯｾﾝ	1	INC.1-16
1	NO PART NO.	#	HOUSING,VALVE	ﾊｳｼﾞﾝｸﾞ	1	
2	NO PART NO.	#	SPOOL	ｽﾌﾟｰﾙ	1	
3	B-21011-31702		PLATE	ﾌﾟﾚｰﾄ	2	
4	B-21001-00689		O-RING	Oﾘﾝｸﾞ	2	
5	B-21011-32801		WIPER	ﾜｲﾊﾟ	2	
6	B-21011-31011		CAP	ｷｬｯﾌﾟ	1	
7	B-21011-30702		SEAT	ｼｰﾄ	2	
8	B-21011-30507		SCREW	ｽｸﾘｭ	1	
9	B-21011-30603		SPRING	ｽﾌﾟﾘﾝｸﾞ	1	
10	B-21011-32404		POPPET	ﾎﾟﾍﾟｯﾄ	1	
11	B-21011-30604		SPRING	ｽﾌﾟﾘﾝｸﾞ	1	
12	B-21001-00106		O-RING	Oﾘﾝｸﾞ	1	
13	B-91111-60102		SCREW	ｽｸﾘｭ	2	
14	B-92703-06181		BOLT	ﾎﾞﾙﾄ	2	
15	B-21001-90408		PLUG	ﾌﾟﾗｸﾞ	1	
16	B-95113-01800		O-RING	Oﾘﾝｸﾞ	1	

FIG.142 SPOOL SECTION (TILT)

(F6017370) スプールセクション

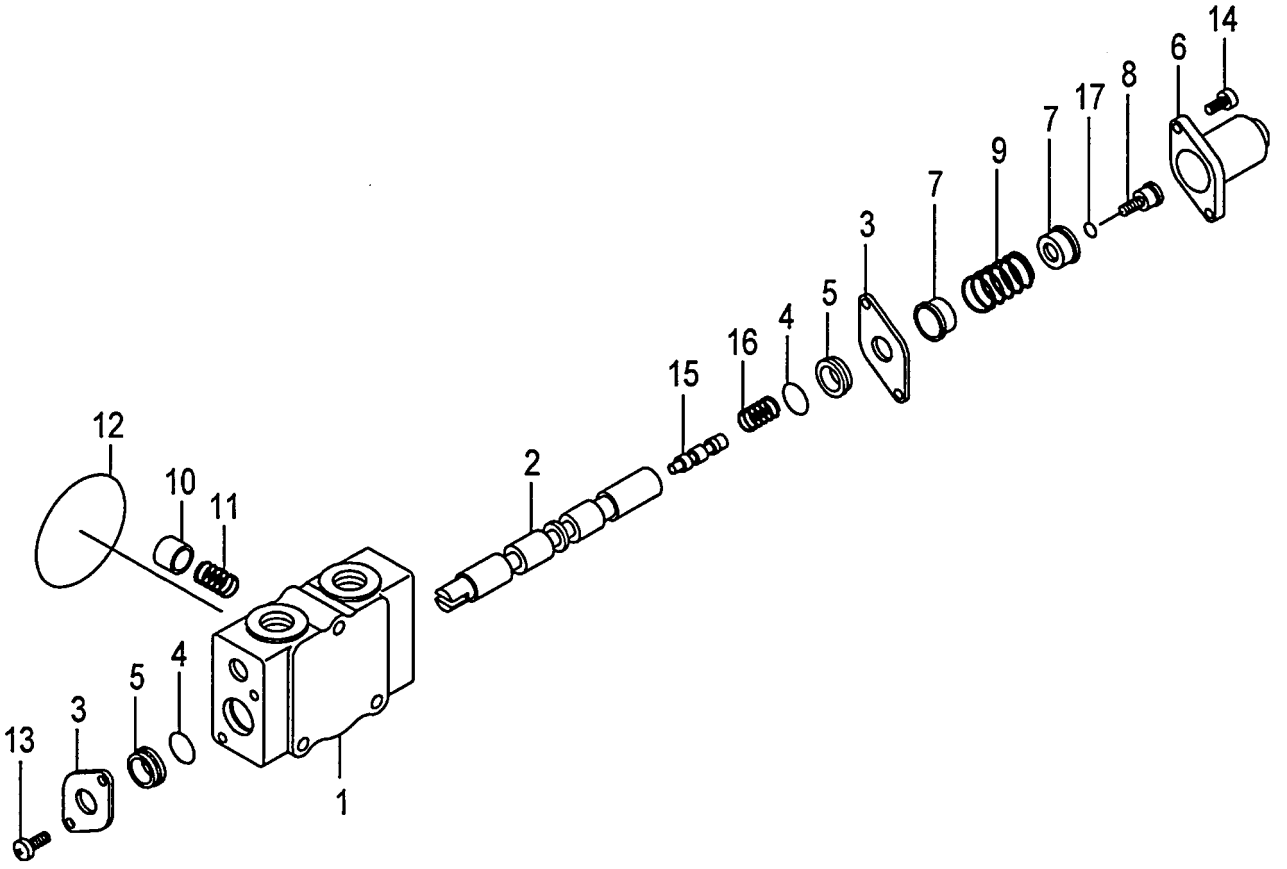

A:FD10C12 FD10T12 FD15C12 FD15T12 FD18C12 FD18T12

Item No	Part No.	Mark	Description		Req'd	Remarks : Serial No.
A1	B-21013-36433		SECTION-ASSY,SPOOL	ｽﾌﾟｰﾙｾｸｼｮﾝｱｯｾﾝ	1	INC.1-17
1	NO PART NO.	#	HOUSING,VALVE	ﾊｳｼﾞﾝｸﾞ	1	
2	NO PART NO.	#	SPOOL	ｽﾌﾟｰﾙ	1	
3	B-21011-31702		PLATE	ﾌﾟﾚｰﾄ	2	
4	B-21001-00689		O-RING	Oﾘﾝｸﾞ	2	
5	B-21011-32801		WIPER	ﾜｲﾊﾟ	2	
6	B-21011-31011		CAP	ｷｬｯﾌﾟ	1	
7	B-21011-30702		SEAT	ｼｰﾄ	2	
8	B-21011-30528		SCREW	ｽｸﾘｭ	1	
9	B-21011-30603		SPRING	ｽﾌﾟﾘﾝｸﾞ	1	
10	B-21011-32404		POPPET	ﾎﾟﾍﾟｯﾄ	1	
11	B-21011-30604		SPRING	ｽﾌﾟﾘﾝｸﾞ	1	
12	B-21001-00106		O-RING	Oﾘﾝｸﾞ	1	
13	B-91111-60102		SCREW	ｽｸﾘｭ	2	
14	B-92703-06181		BOLT	ﾎﾞﾙﾄ	2	
15	NO PART NO.	#	VALVE	ﾊﾞﾙﾌﾞ	1	
16	B-21011-30618		SPRING	ｽﾌﾟﾘﾝｸﾞ	1	
17	B-95133-00500		O-RING	Oﾘﾝｸﾞ	1	

FIG.143 SPOOL SECTION [3SV][4SV][5SV]

(F6017380) スプールセクション

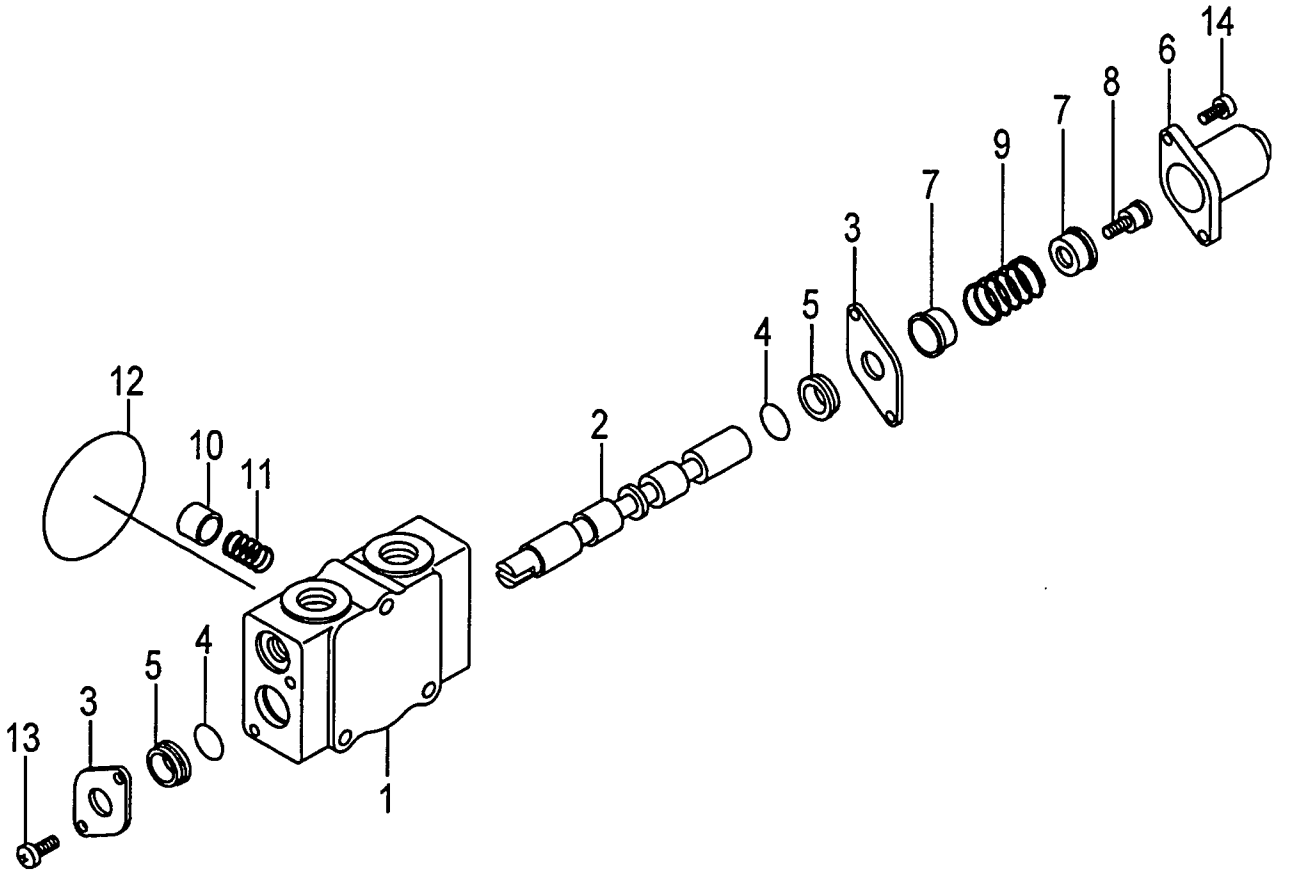

A:FD10C12 FD10T12 FD15C12 FD15T12 FD18C12 FD18T12

Item No	Part No.	Mark	Description		Req'd	Remarks : Serial No.
A1	B-21013-39701		SECTION-ASSY,SPOOL	ｽﾌﾟｰﾙｾｸｼｮﾝｱｯｾﾝ	1	[3SV] INC.1-14
-	B-21013-39701		SECTION-ASSY,SPOOL	ｽﾌﾟｰﾙｾｸｼｮﾝｱｯｾﾝ	2	[4SV] INC.1-14
-	B-21013-39701		SECTION-ASSY,SPOOL	ｽﾌﾟｰﾙｾｸｼｮﾝｱｯｾﾝ	3	[5SV] INC.1-14
-	B-21013-36434		SECTION-ASSY,SPOOL	ｽﾌﾟｰﾙｾｸｼｮﾝｱｯｾﾝ	1	[3SV/VLS] INC.1-14
-	B-21013-36434		SECTION-ASSY,SPOOL	ｽﾌﾟｰﾙｾｸｼｮﾝｱｯｾﾝ	2	[4SV/VLS] INC.1-14
-	B-21013-36434		SECTION-ASSY,SPOOL	ｽﾌﾟｰﾙｾｸｼｮﾝｱｯｾﾝ	3	[5SV/VLS] INC.1-14
1	NO PART NO.	#	HOUSING,VALVE	ﾊｳｼﾞﾝｸﾞ	1	[3SV]
-	NO PART NO.	#	HOUSING,VALVE	ﾊｳｼﾞﾝｸﾞ	2	[4SV]
-	NO PART NO.	#	HOUSING,VALVE	ﾊｳｼﾞﾝｸﾞ	3	[5SV]
2	NO PART NO.	#	SPOOL	ｽﾌﾟｰﾙ	1	[3SV]
-	NO PART NO.	#	SPOOL	ｽﾌﾟｰﾙ	2	[4SV]
-	NO PART NO.	#	SPOOL	ｽﾌﾟｰﾙ	3	[5SV]
3	B-21011-31702		PLATE	ﾌﾟﾚｰﾄ	2	[3SV]
-	B-21011-31702		PLATE	ﾌﾟﾚｰﾄ	4	[4SV]
-	B-21011-31702		PLATE	ﾌﾟﾚｰﾄ	6	[5SV]
4	B-21001-00689		O-RING	Oﾘﾝｸﾞ	2	[3SV]
-	B-21001-00689		O-RING	Oﾘﾝｸﾞ	4	[4SV]
-	B-21001-00689		O-RING	Oﾘﾝｸﾞ	6	[5SV]
5	B-21011-32801		WIPER	ﾜｲﾊﾟ	2	[3SV]
-	B-21011-32801		WIPER	ﾜｲﾊﾟ	4	[4SV]
-	B-21011-32801		WIPER	ﾜｲﾊﾟ	6	[5SV]
6	B-21011-31011		CAP	ｷｬｯﾌﾟ	1	[3SV]
-	B-21011-31011		CAP	ｷｬｯﾌﾟ	2	[4SV]
-	B-21011-31011		CAP	ｷｬｯﾌﾟ	3	[5SV]
7	B-21011-30702		SEAT	ｼｰﾄ	2	[3SV]
-	B-21011-30702		SEAT	ｼｰﾄ	4	[4SV]
-	B-21011-30702		SEAT	ｼｰﾄ	6	[5SV]
8	B-21011-30507		SCREW	ｽｸﾘｭ	1	[3SV]
-	B-21011-30507		SCREW	ｽｸﾘｭ	2	[4SV]
-	B-21011-30507		SCREW	ｽｸﾘｭ	3	[5SV]
9	B-21011-30603		SPRING	ｽﾌﾟﾘﾝｸﾞ	1	[3SV]
-	B-21011-30603		SPRING	ｽﾌﾟﾘﾝｸﾞ	2	[4SV]
-	B-21011-30603		SPRING	ｽﾌﾟﾘﾝｸﾞ	3	[5SV]
10	B-21011-32404		POPPET	ﾎﾟﾍﾟｯﾄ	1	[3SV]
-	B-21011-32404		POPPET	ﾎﾟﾍﾟｯﾄ	2	[4SV]
-	B-21011-32404		POPPET	ﾎﾟﾍﾟｯﾄ	3	[5SV]
11	B-21011-30604		SPRING	ｽﾌﾟﾘﾝｸﾞ	1	[3SV]
-	B-21011-30604		SPRING	ｽﾌﾟﾘﾝｸﾞ	2	[4SV]
-	B-21011-30604		SPRING	ｽﾌﾟﾘﾝｸﾞ	3	[5SV]
12	B-21001-00106		O-RING	Oﾘﾝｸﾞ	1	[3SV]
-	B-21001-00106		O-RING	Oﾘﾝｸﾞ	2	[4SV]
-	B-21001-00106		O-RING	Oﾘﾝｸﾞ	3	[5SV]
13	B-91111-60102		SCREW	ｽｸﾘｭ	2	[3SV]
-	B-91111-60102		SCREW	ｽｸﾘｭ	4	[4SV]
-	B-91111-60102		SCREW	ｽｸﾘｭ	6	[5SV]
14	B-92703-06181		BOLT	ﾎﾞﾙﾄ	2	[3SV]
-	B-92703-06181		BOLT	ﾎﾞﾙﾄ	4	[4SV]
-	B-92703-06181		BOLT	ﾎﾞﾙﾄ	6	[5SV]

FIG.144 CONTROL VALVE FITTING
(F6017390) コントロールバルブフィッティング

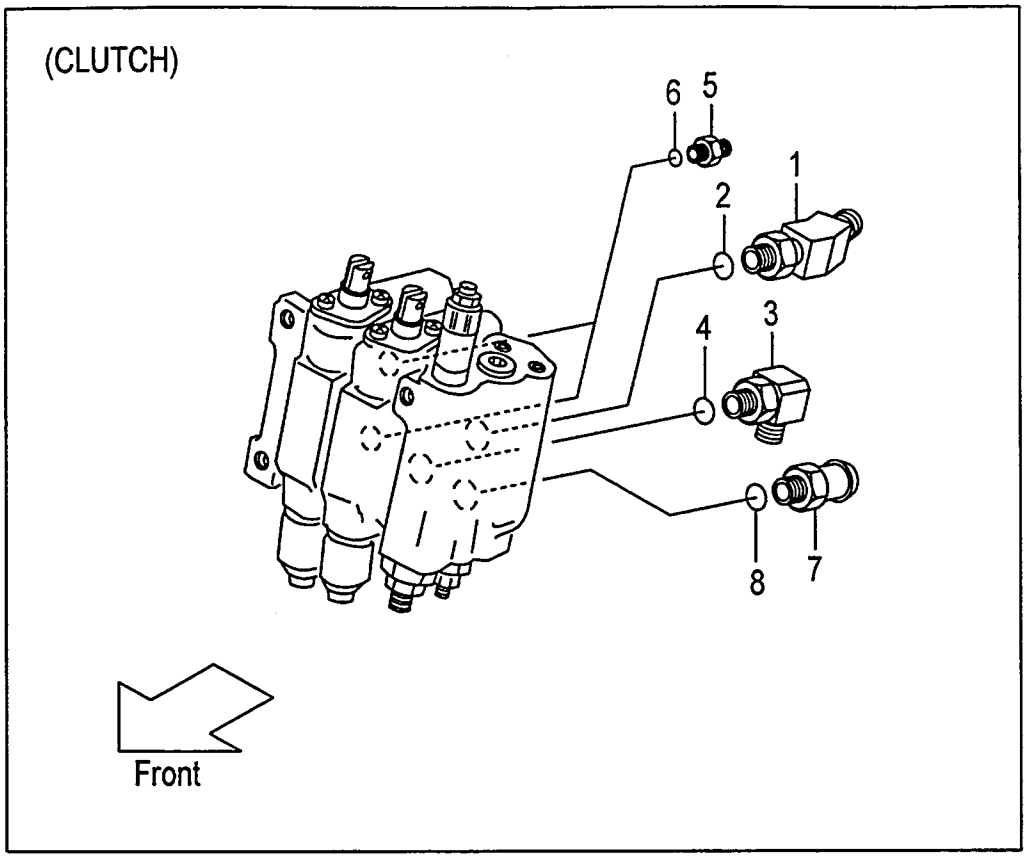

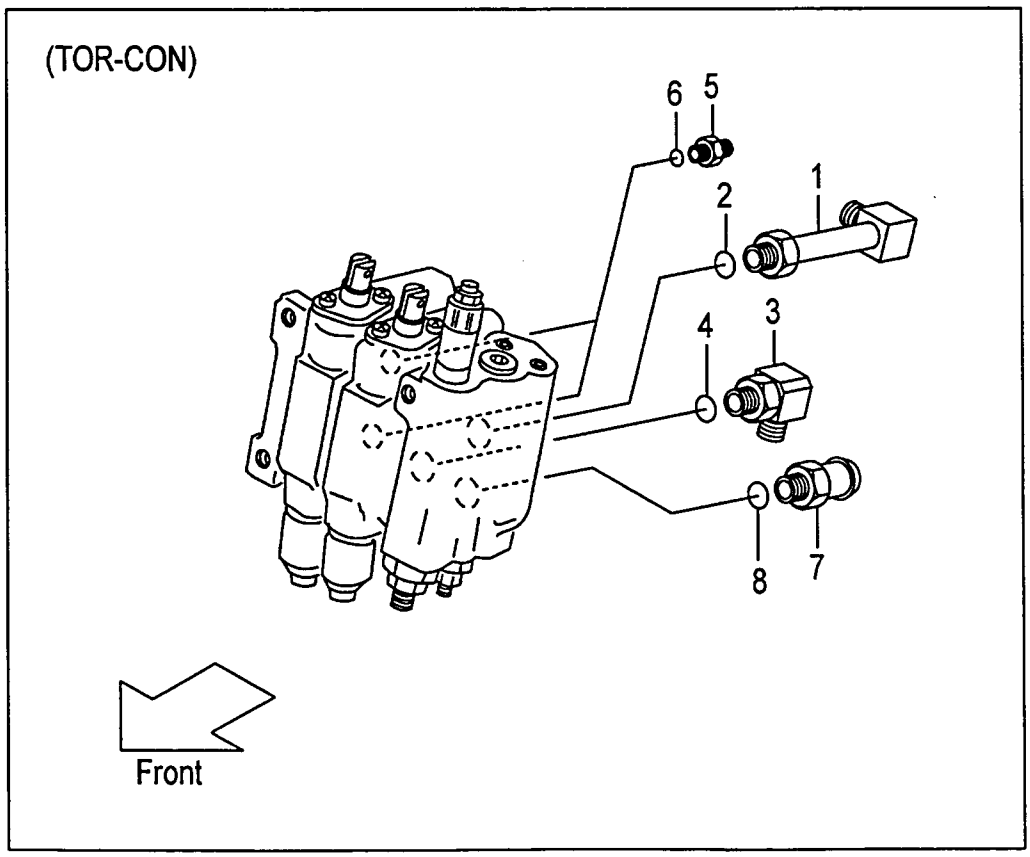

A:FD10C12 FD15C12 FD18C12
B:FD10T12 FD15T12 FD18T12

Item No	Part No.	Mark	Description		Req'd	Remarks : Serial No.
A1	216M7-62101		ADAPTER-ASSY	ｱﾀﾞﾌﾟﾀｱｯｾﾝ	1	A
						INC.1,2
-	22777-60301		ELBOW-ASSY	ｴﾙﾎﾞｱｯｾﾝ	1	B
						INC.1,2
1	NO PART NO.	#	ADAPTER	ｱﾀﾞﾌﾟﾀ	1	A
-	NO PART NO.	#	ELBOW	ｴﾙﾎﾞ	1	B
2	03320-00180		O-RING	Oﾘﾝｸﾞ	1	
A2	24237-62341		ELBOW-ASSY	ｴﾙﾎﾞｱｯｾﾝ	1	INC.3,4
3	NO PART NO.	#	ELBOW	ｴﾙﾎﾞ	1	
4	22257-62221		O-RING	Oﾘﾝｸﾞ	1	
A3	277H7-60601		NIPPLE-ASSY	ﾆｯﾌﾟﾙｱｯｾﾝ	2	INC.5,6
5	NO PART NO.	#	NIPPLE	ﾆｯﾌﾟﾙ	2	
6	03320-00140		O-RING	Oﾘﾝｸﾞ	2	
A4	24237-60411		NIPPLE-ASSY	ﾆｯﾌﾟﾙｱｯｾﾝ	1	INC.7,8
7	NO PART NO.	#	NIPPLE	ﾆｯﾌﾟﾙ	1	
8	03320-00180		O-RING	Oﾘﾝｸﾞ	1	

FIG.145 VALVE CONTROL [2SV]

(F60173A0) ﾊﾞﾙﾌﾞｺﾝﾄﾛｰﾙ

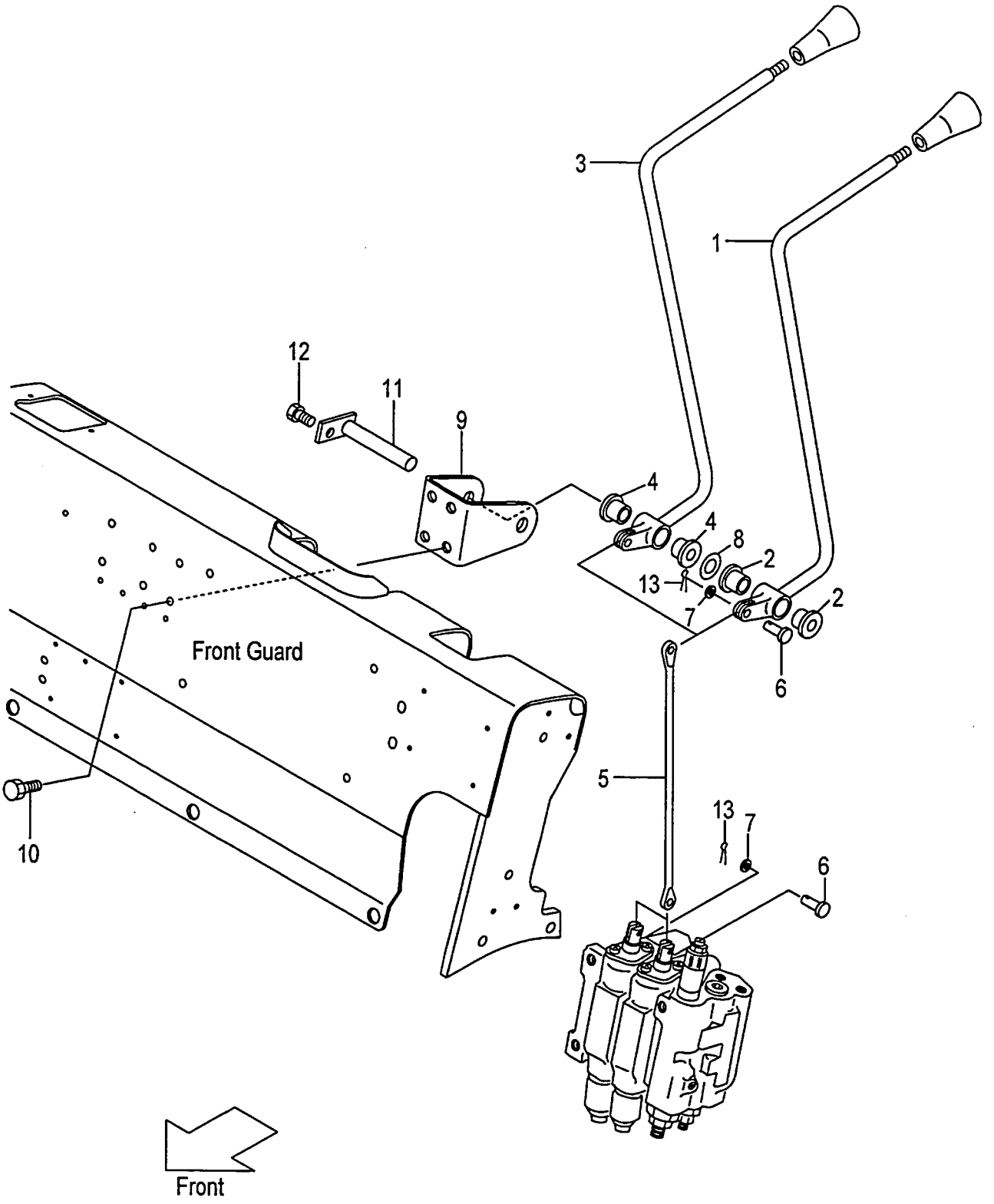

A:FD10C12 FD10T12 FD15C12 FD15T12 FD18C12 FD18T12

Item No	Part No.	Mark	Description		Req'd	Remarks : Serial No.
A1	216G7-40012		LEVER-ASSY,LIFT	ﾘﾌﾄﾚﾊﾞｰｱｯｾﾝ	1	INC.1,2
1	NO PART NO.	#	LEVER,LIFT	ﾚﾊﾞｰ	1	
2	214A7-42071		BUSHING	ﾌﾞｯｼﾝｸﾞ	2	
A2	216G7-40022		LEVER-ASSY,TILT	ﾃｨﾙﾄﾚﾊﾞｰｱｯｾﾝ	1	INC.3,4
3	NO PART NO.	#	LEVER,TILT	ﾚﾊﾞｰ	1	
4	214A7-42071		BUSHING	ﾌﾞｯｼﾝｸﾞ	2	
5	214A7-42171		JOINT	ｼﾞｮｲﾝﾄ	2	
6	22717-40061		PIN,CLEVIS	ﾋﾟﾝ	4	
7	02000-00005		WASHER	ﾜｯｼｬ	4	
8	22517-40051		SHIM,T-0.2	ｼﾑ	3	
9	216G7-42001		BRACKET,VALVE-LEVER	ﾌﾞﾗｹｯﾄ	1	
10	216H3-92281		BOLT	ﾎﾞﾙﾄ	4	
11	23647-40041		SHAFT,2SV-LEVER	ｼｬﾌﾄ	1	
-	529F3-70401		SHAFT,2SV-LEVER	ｼｬﾌﾄ	1	[FC]
12	01183-06012		BOLT	ﾎﾞﾙﾄ	1	
13	02200-16010		PIN,COTTER	ﾋﾟﾝ	4	

FIG.146 VALVE CONTROL [3SV]

(F60173B0) ﾊﾞﾙﾌﾞｺﾝﾄﾛｰﾙ

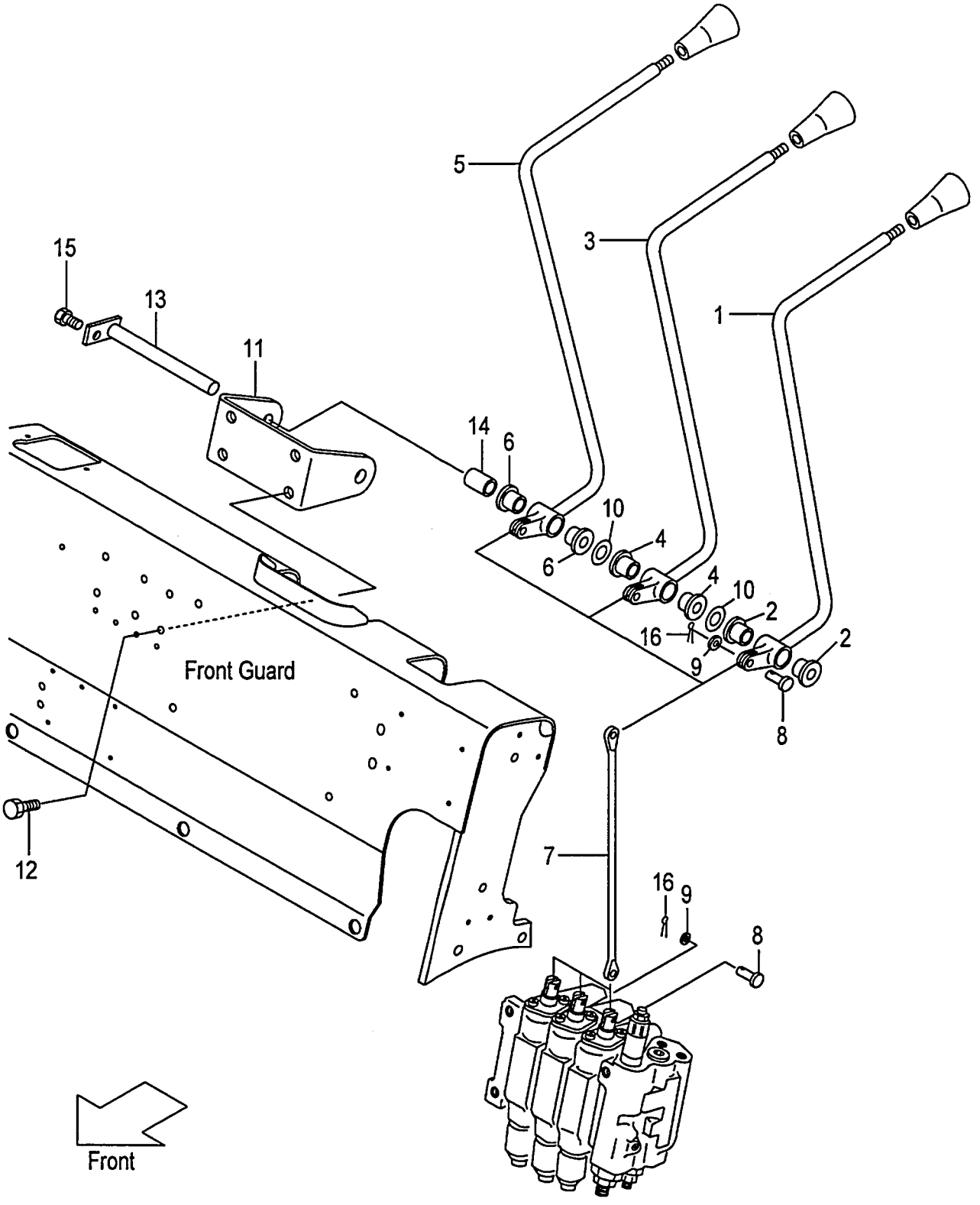

A:FD10C12 FD10T12 FD15C12 FD15T12 FD18C12 FD18T12

Item No	Part No.	Mark	Description		Req'd	Remarks : Serial No.
A1	216G7-40012		LEVER-ASSY,LIFT	ﾘﾌﾄﾚﾊﾞｰｱｯｾﾝ	1	[3SV] INC.1,2
1	NO PART NO.	#	LEVER,LIFT	ﾚﾊﾞｰ	1	[3SV]
2	214A7-42071		BUSHING	ﾌﾞｯｼﾝｸﾞ	2	[3SV]
A2	216G7-40022		LEVER-ASSY,TILT	ﾃｨﾙﾄﾚﾊﾞｰｱｯｾﾝ	1	[3SV] INC.3,4
3	NO PART NO.	#	LEVER,TILT	ﾚﾊﾞｰ	1	[3SV]
4	214A7-42071		BUSHING	ﾌﾞｯｼﾝｸﾞ	2	[3SV]
A3	216G7-40032		LEVER-ASSY,THIRD	ﾚﾊﾞｰｱｯｾﾝ	1	[3SV] INC.5,6
5	NO PART NO.	#	LEVER,THIRD	ﾚﾊﾞｰ	1	[3SV]
6	214A7-42071		BUSHING	ﾌﾞｯｼﾝｸﾞ	2	[3SV]
7	214A7-42171		JOINT	ｼﾞｮｲﾝﾄ	3	[3SV]
8	22717-40061		PIN,CLEVIS	ﾋﾟﾝ	6	[3SV]
9	02000-00005		WASHER	ﾜｯｼｬ	6	[3SV]
10	22517-40051		SHIM,T-0.2	ｼﾑ	6	[3SV]
11	216G7-42011		BRACKET,VALVE-LEVER	ﾌﾞﾗｹｯﾄ	1	[3SV]
12	216H3-92281		BOLT	ﾎﾞﾙﾄ	4	[3SV]
13	23457-42041		SHAFT,3&4SV-LEVER	ｼｬﾌﾄ	1	[3SV]
-	529F3-70411		SHAFT,3&4SV-LEVER	ｼｬﾌﾄ	1	[3SV/FC]
14	23657-42131		COLLAR	ｶﾗｰ	1	[3SV]
15	01183-06012		BOLT	ﾎﾞﾙﾄ	1	[3SV]
16	02200-16010		PIN,COTTER	ﾋﾟﾝ	6	[3SV]

FIG.147 VALVE CONTROL [4SV]

(F60173C0) ﾊﾞﾙﾌﾞｺﾝﾄﾛｰﾙ

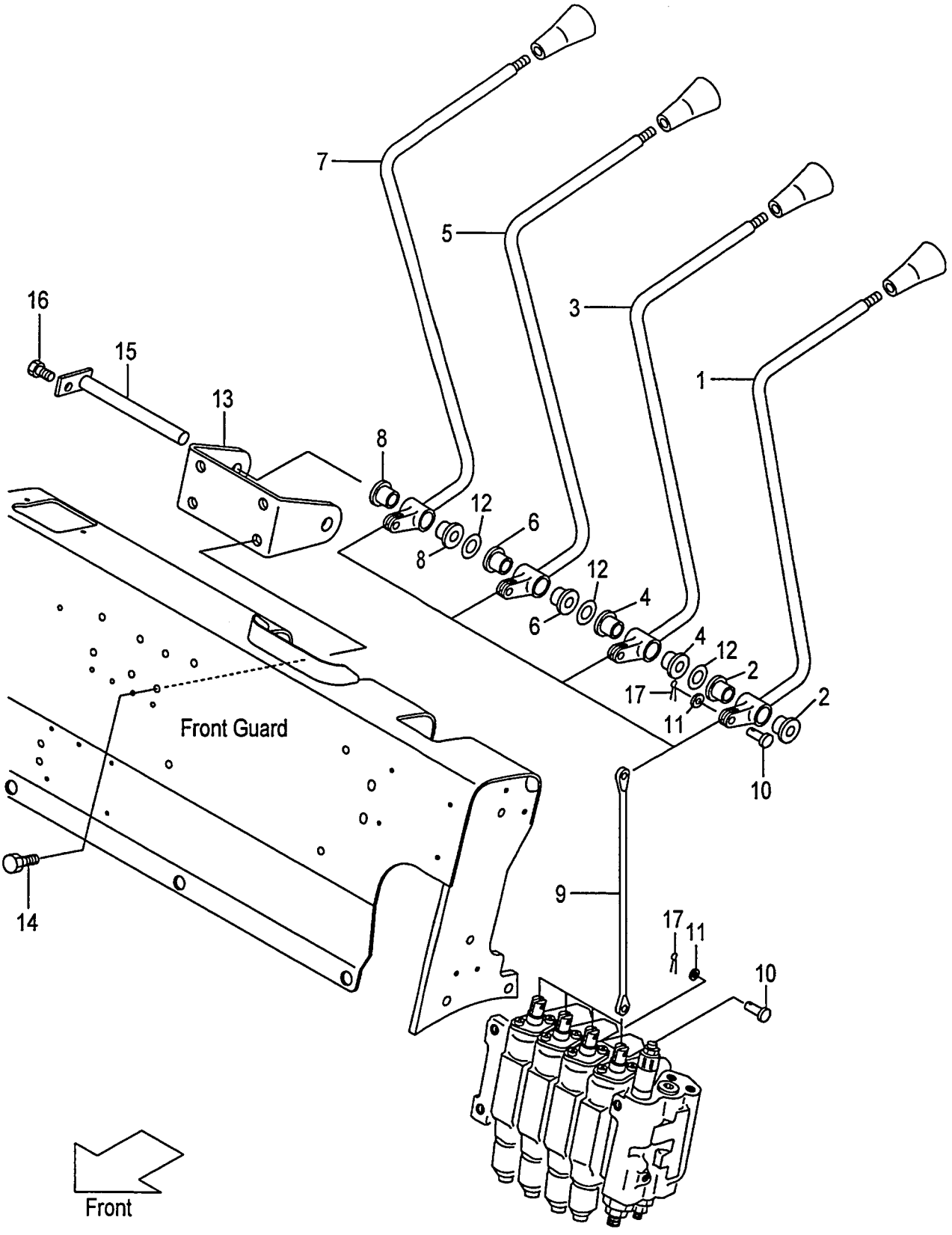

A:FD10C12 FD10T12 FD15C12 FD15T12 FD18C12 FD18T12

Item No	Part No.	Mark	Description		Req'd	Remarks : Serial No.
A1	216G7-40012		LEVER-ASSY,LIFT	ﾘﾌﾄﾚﾊﾞｰｱｯｾﾝ	1	[4SV] INC.1,2
1	NO PART NO.	#	LEVER,LIFT	ﾚﾊﾞｰ	1	[4SV]
2	214A7-42071		BUSHING	ﾌﾞｯｼﾝｸﾞ	2	[4SV]
A2	216G7-40022		LEVER-ASSY,TILT	ﾃｨﾙﾄﾚﾊﾞｰｱｯｾﾝ	1	[4SV] INC.3,4
3	NO PART NO.	#	LEVER,TILT	ﾚﾊﾞｰ	1	[4SV]
4	214A7-42071		BUSHING	ﾌﾞｯｼﾝｸﾞ	2	[4SV]
A3	216G7-40032		LEVER-ASSY,THIRD	ﾚﾊﾞｰｱｯｾﾝ	1	[4SV] INC.5,6
5	NO PART NO.	#	LEVER,THIRD	ﾚﾊﾞｰ	1	[4SV]
6	214A7-42071		BUSHING	ﾌﾞｯｼﾝｸﾞ	2	[4SV]
A4	216G7-40042		LEVER-ASSY,FOURTH	ﾚﾊﾞｰｱｯｾﾝ	1	[4SV] INC.7,8
7	NO PART NO.	#	LEVER,FOURTH	ﾚﾊﾞｰ	1	[4SV]
8	214A7-42071		BUSHING	ﾌﾞｯｼﾝｸﾞ	2	[4SV]
9	214A7-42171		JOINT	ｼﾞｮｲﾝﾄ	4	[4SV]
10	22717-40061		PIN,CLEVIS	ﾋﾟﾝ	8	[4SV]
11	02000-00005		WASHER	ﾜｯｼｬ	8	[4SV]
12	22517-40051		SHIM,T-0.2	ｼﾑ	9	[4SV]
13	216G7-42011		BRACKET,VALVE-LEVER	ﾌﾞﾗｹｯﾄ	1	[4SV]
14	216H3-92281		BOLT	ﾎﾞﾙﾄ	4	[4SV]
15	23457-42041		SHAFT,3&4SV-LEVER	ｼｬﾌﾄ	1	[4SV]
-	529F3-70411		SHAFT,3&4SV-LEVER	ｼｬﾌﾄ	1	[4SV/FC]
16	01183-06012		BOLT	ﾎﾞﾙﾄ	1	[4SV]
17	02200-16010		PIN,COTTER	ﾋﾟﾝ	8	[4SV]

FIG.148 VALVE CONTROL [5SV]

(F60173D0) ﾊﾞﾙﾌﾞｺﾝﾄﾛｰﾙ

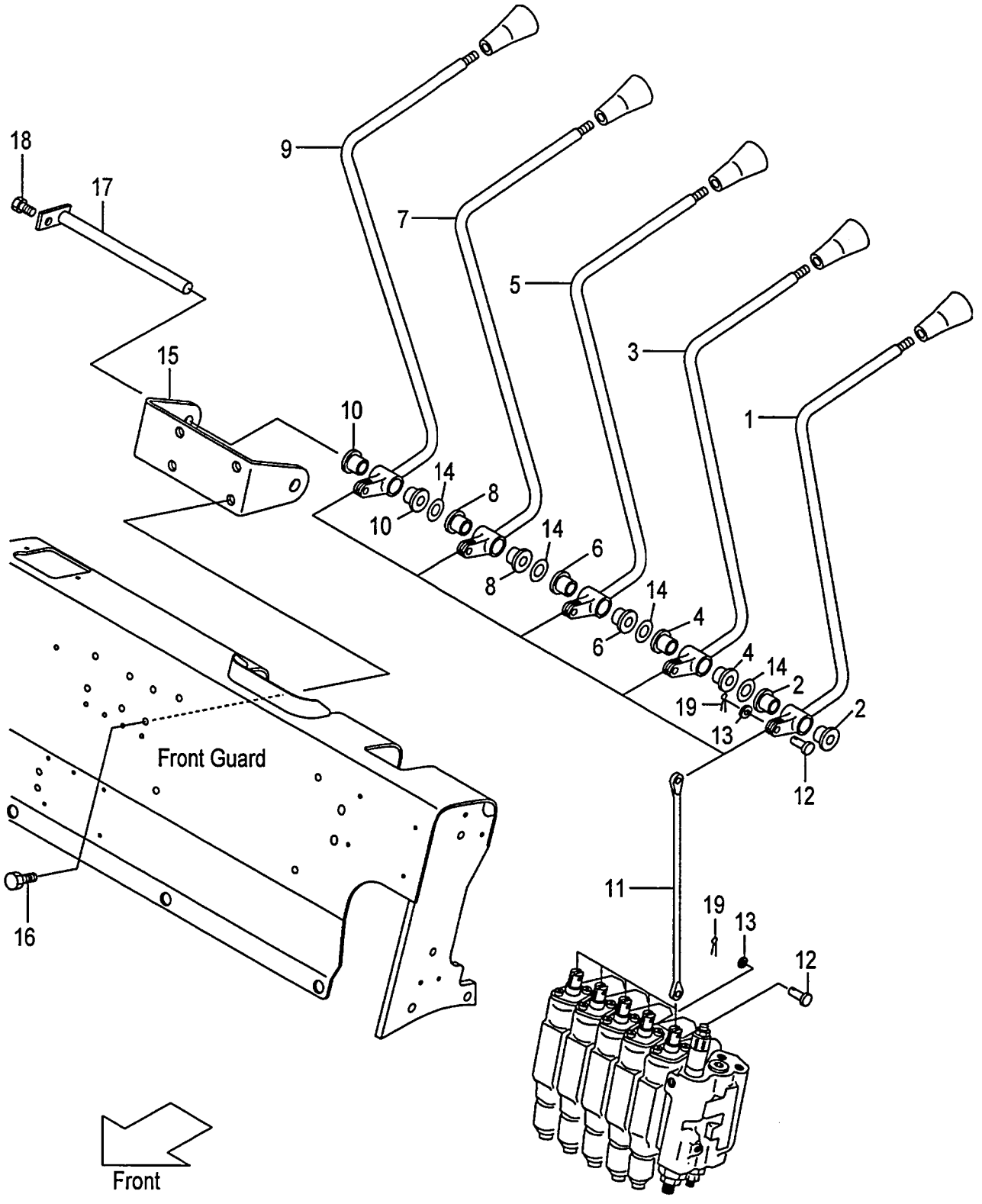

A:FD10C12 FD10T12 FD15C12 FD15T12 FD18C12 FD18T12

Item No	Part No.	Mark	Description		Req'd	Remarks : Serial No.
A1	216G7-40012		LEVER-ASSY,LIFT	ﾘﾌﾄﾚﾊﾞｰｱｯｾﾝ	1	[5SV] INC.1,2
1	NO PART NO.	#	LEVER,LIFT	ﾚﾊﾞｰ	1	[5SV]
2	214A7-42071		BUSHING	ﾌﾞｯｼﾝｸﾞ	2	[5SV]
A2	216G7-40022		LEVER-ASSY,TILT	ﾃｨﾙﾄﾚﾊﾞｰｱｯｾﾝ	1	[5SV] INC.3,4
3	NO PART NO.	#	LEVER,TILT	ﾚﾊﾞｰ	1	[5SV]
4	214A7-42071		BUSHING	ﾌﾞｯｼﾝｸﾞ	2	[5SV]
A3	216G7-40032		LEVER-ASSY,THIRD	ﾚﾊﾞｰｱｯｾﾝ	1	[5SV] INC.5,6
5	NO PART NO.	#	LEVER,THIRD	ﾚﾊﾞｰ	1	[5SV]
6	214A7-42071		BUSHING	ﾌﾞｯｼﾝｸﾞ	2	[5SV]
A4	216G7-40042		LEVER-ASSY,FOURTH	ﾚﾊﾞｰｱｯｾﾝ	1	[5SV] INC.7,8
7	NO PART NO.	#	LEVER,FOURTH	ﾚﾊﾞｰ	1	[5SV]
8	214A7-42071		BUSHING	ﾌﾞｯｼﾝｸﾞ	2	[5SV]
A5	234A7-40052		LEVER-ASSY,FIFTH	ﾚﾊﾞｰｱｯｾﾝ	1	[5SV] INC.9,10
9	NO PART NO.	#	LEVER,FIFTH	ﾚﾊﾞｰ	1	[5SV]
10	214A7-42071		BUSHING	ﾌﾞｯｼﾝｸﾞ	2	[5SV]
11	214A7-42171		JOINT	ｼﾞｮｲﾝﾄ	5	[5SV]
12	22717-40061		PIN,CLEVIS	ﾋﾟﾝ	10	[5SV]
13	02000-00005		WASHER	ﾜｯｼｬ	10	[5SV]
14	22517-40051		SHIM,T-0.2	ｼﾑ	12	[5SV]
15	234A7-42011		BRACKET,VALVE-LEVER	ﾌﾞﾗｹｯﾄ	1	[5SV]
16	216H3-92281		BOLT	ﾎﾞﾙﾄ	4	[5SV]
17	55593-02371		SHAFT,5SV-LEVER	ｼｬﾌﾄ	1	[5SV]
-	529F3-70421		SHAFT,5SV-LEVER	ｼｬﾌﾄ	1	[5SV/FC]
18	01183-06012		BOLT	ﾎﾞﾙﾄ	1	[5SV]
19	02200-16010		PIN,COTTER	ﾋﾟﾝ	10	[5SV]

FIG.149 VALVE CONTROL KNOB
(F60173E0) ﾊﾞﾙﾌﾞｺﾝﾄﾛｰﾙﾉﾌﾞ

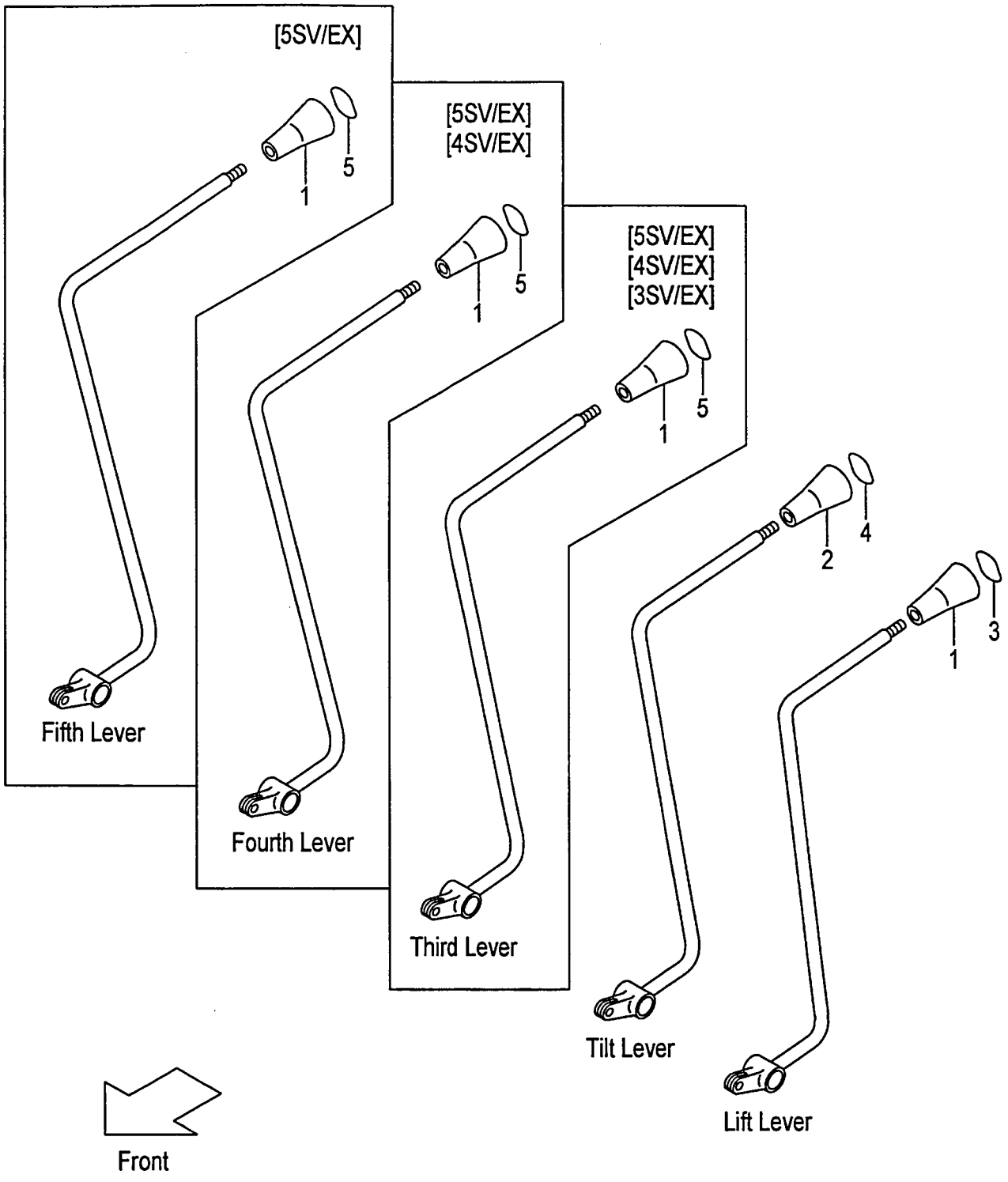

A:FD10C12 FD10T12 FD15C12 FD15T12 FD18C12 FD18T12

Item No	Part No.	Mark	Description	Req'd	Remarks : Serial No.
1	214A7-42181		KNOB,VALVE-LEVER ﾉﾌﾞ	1	
-	214A7-42181		KNOB,VALVE-LEVER ﾉﾌﾞ	2	[3SV/EX]
-	214A7-42181		KNOB,VALVE-LEVER ﾉﾌﾞ	3	[4SV/EX]
-	214A7-42181		KNOB,VALVE-LEVER ﾉﾌﾞ	4	[5SV/EX]
2	281E7-42101		KNOB,VALVE-LEVER ﾉﾌﾞ	1	
3	214A7-42191		DECAL,SYMBOL,LIFT ﾃﾞｶﾙ	1	
4	214A7-42201		DECAL,SYMBOL,TILT ﾃﾞｶﾙ	1	
5	514A2-72411		DECAL,SYMBOL,SPACE ﾃﾞｶﾙ	1	[3SV/EX]
-	514A2-72411		DECAL,SYMBOL,SPACE ﾃﾞｶﾙ	2	[4SV/EX]
-	514A2-72411		DECAL,SYMBOL,SPACE ﾃﾞｶﾙ	3	[5SV/EX]

FIG.150 HYDRAULIC LINE (MAIN)(1/3)

(F6017620) ﾊｲﾄﾞﾛﾘｯｸﾗｲﾝ(1/3)

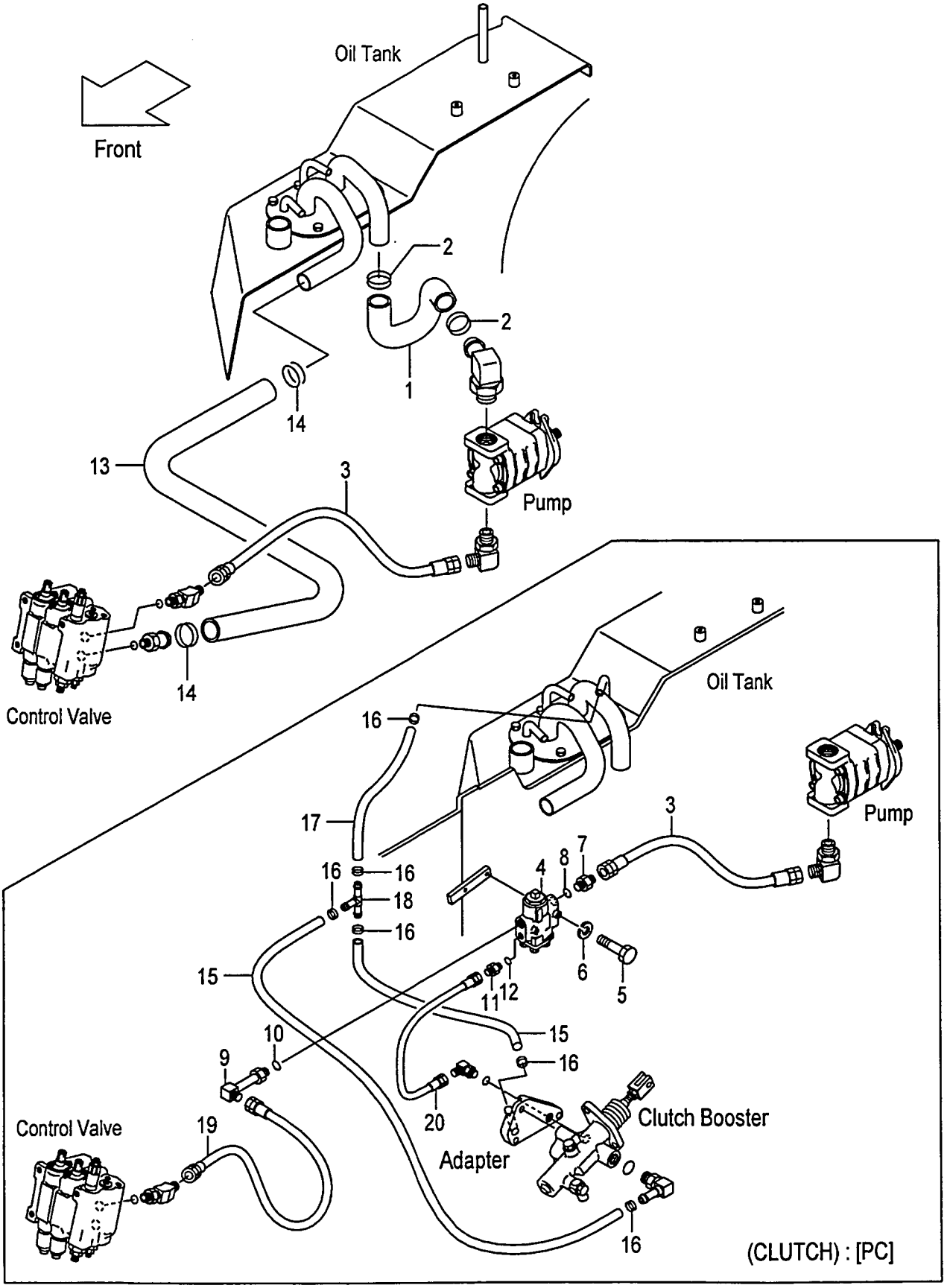

A:FD10C12 FD15C12 FD18C12
B:FD10T12 FD15T12 FD18T12

Item No	Part No.	Mark	Description		Req'd	Remarks : Serial No.
1	241G7-62001		HOSE,SUCTION	ホース	1	
2	04911-00046		CLIP	クリップ゛	2	
3	04691-04092		HOSE	ホース	1	A
-	04691-04105		HOSE	ホース	1	B
-	04691-04045		HOSE	ホース	1	A [PC]
4	234H7-60301		VALVE,FLOW-PRIORITY	バ゛ルブ゛	1	A [PC]
5	01100-06055		BOLT	ボ゛ルト	2	A [PC]
6	02010-00006		WASHER	ワッシャ	2	A [PC]
A1	04134-20404		NIPPLE-ASSY	ニップ゛ルアッセン	1	A [PC] INC.7,8
7	NO PART NO.	#	NIPPLE	ニップ゛ル	1	A [PC]
8	03320-00180		O-RING	Oリング゛	1	A [PC]
A2	22777-60301		ELBOW-ASSY	エルボ゛アッセン	1	A [PC] INC.9,10
9	NO PART NO.	#	ELBOW	エルボ゛	1	A [PC]
10	03320-00180		O-RING	Oリング゛	1	A [PC]
A3	23657-60311		NIPPLE-ASSY	ニップ゛ルアッセン	1	A [PC] INC.11,12
11	NO PART NO.	#	NIPPLE	ニップ゛ル	1	A [PC]
12	03320-00140		O-RING	Oリング゛	1	A [PC]
13	216G7-62211		HOSE,RETURN	ホース	1	
14	04911-00044		CLIP	クリップ゛	2	
15	04710-04105		HOSE	ホース	2	A [PC]
16	04911-00021		CLIP	クリップ゛	6	A [PC]
17	04710-04050		HOSE	ホース	1	A [PC]
18	53675-55051		THREE-WAY	スリーウエイ	1	A [PC]
19	04691-04042		HOSE	ホース	1	A [PC]
20	04691-02065		HOSE	ホース	1	A [PC]

FIG.151 HYDRAULIC LINE (MAIN)(2/3)

(F6017630) ﾊｲﾄﾞﾛﾘｯｸﾗｲﾝ(2/3)

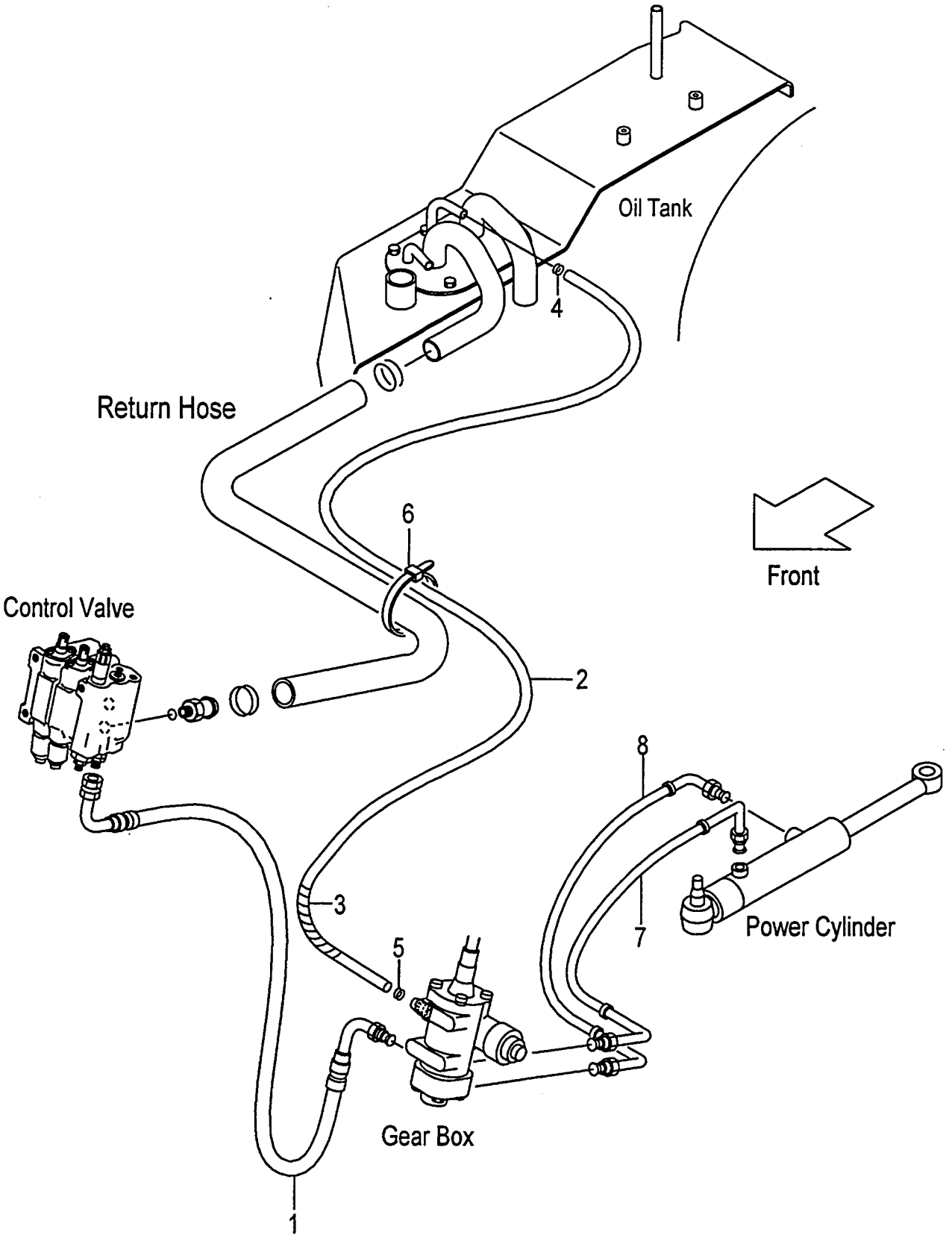

A:FD10C12 FD10T12 FD15C12 FD15T12 FD18C12 FD18T12

Item No	Part No.	Mark	Description		Req'd	Remarks : Serial No.
1	218G7-62081		HOSE	ホース	1	
A1	218G7-62261		HOSE-ASSY,PS-RETURN	ホースアッセン	1	INC.2,3
2	04710-04140		HOSE	ホース	1	
3	NO PART NO.	#	TUBE,SPIRAL	チューブ゛	1	
4	04911-00021		CLIP	クリップ゜	1	
5	04911-00020		CLIP	クリップ゜	1	
6	04913-10200		BAND	バ゛ンド゛	2	
7	218G7-60301		HOSE,PS,FRONT	ホース	1	
8	218G7-60311		HOSE,PS,REAR	ホース	1	

FIG.152 HYDRAULIC LINE (MAIN)(2/3) [EXC][EXE][EXK][EXN][OBT][EXB/OBT]

(F6017640) ﾊｲﾄﾞﾛﾘｯｸﾗｲﾝ(2/3)

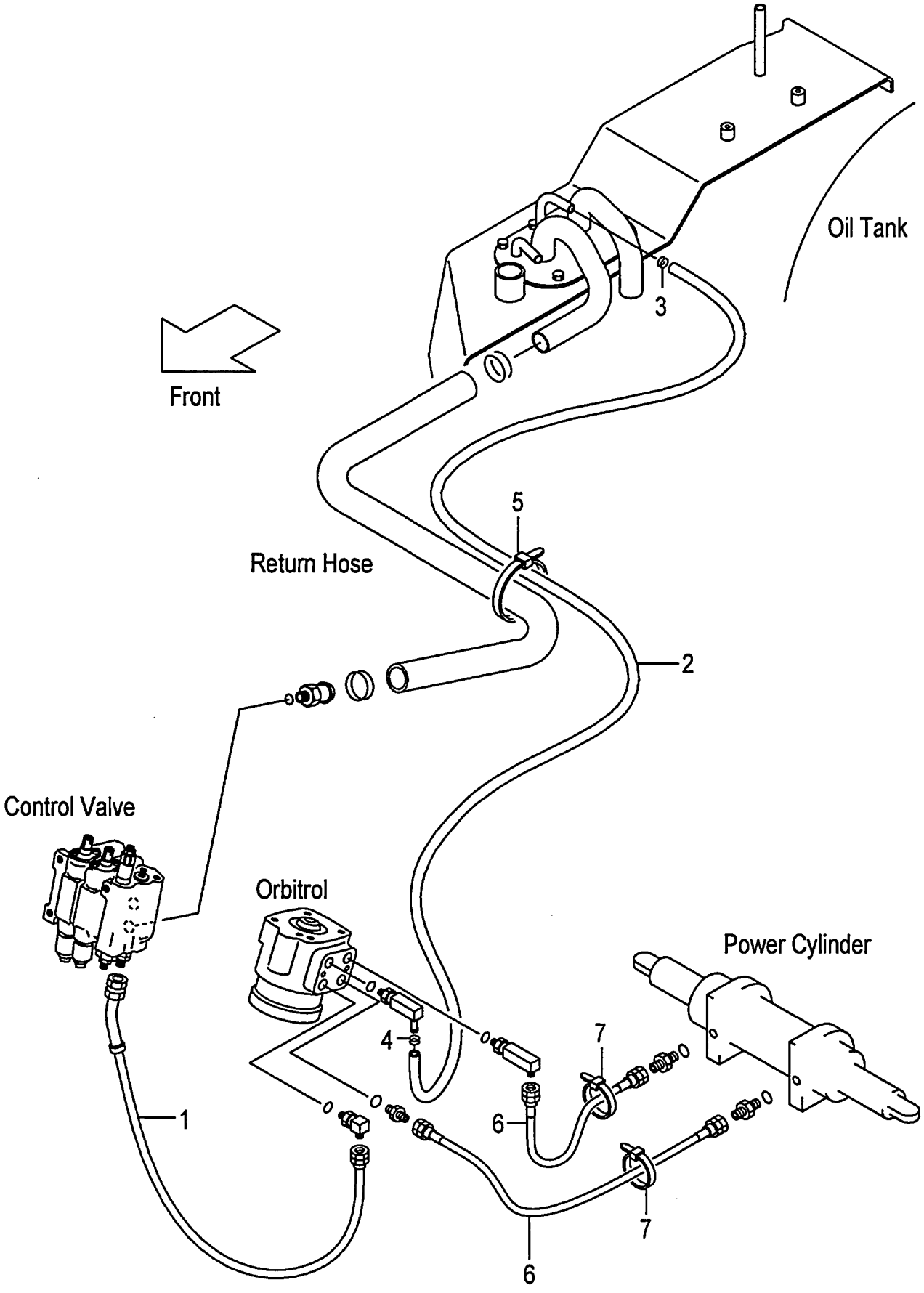

A:FD10C12 FD10T12 FD15C12 FD15T12 FD18C12 FD18T12

Item No	Part No.	Mark	Description		Req'd	Remarks : Serial No.
1	215E7-62091		HOSE	ﾎｰｽ	1	[EXC][EXE][EXK][EXN][OBT] [EXB/OBT]
2	04710-04155		HOSE	ﾎｰｽ	1	[EXC][EXE][EXK][EXN][OBT] [EXB/OBT]
3	04911-00021		CLIP	ｸﾘｯﾌﾟ	1	[EXC][EXE][EXK][EXN][OBT] [EXB/OBT]
4	04911-00020		CLIP	ｸﾘｯﾌﾟ	1	[EXC][EXE][EXK][EXN][OBT] [EXB/OBT]
5	27042-42312		BAND,CABLE	ﾊﾞﾝﾄﾞ	2	[EXC][EXE][EXK][EXN][OBT] [EXB/OBT]
6	510F2-42201		HOSE,PS	ﾎｰｽ	2	[EXC][EXE][EXK][EXN][OBT] [EXB/OBT]
7	04913-11380		BAND,INSHULOCK	ﾊﾞﾝﾄﾞ	2	[EXC][EXE][EXK][EXN][OBT] [EXB/OBT]

FIG.153 HYDRAULIC LINE (MAIN)(2/3) [(EXC,EXE,EXK,EXN)/PSS]

(F60176A0) ﾊｲﾄﾞﾛﾘｯｸﾗｲﾝ(2/3)

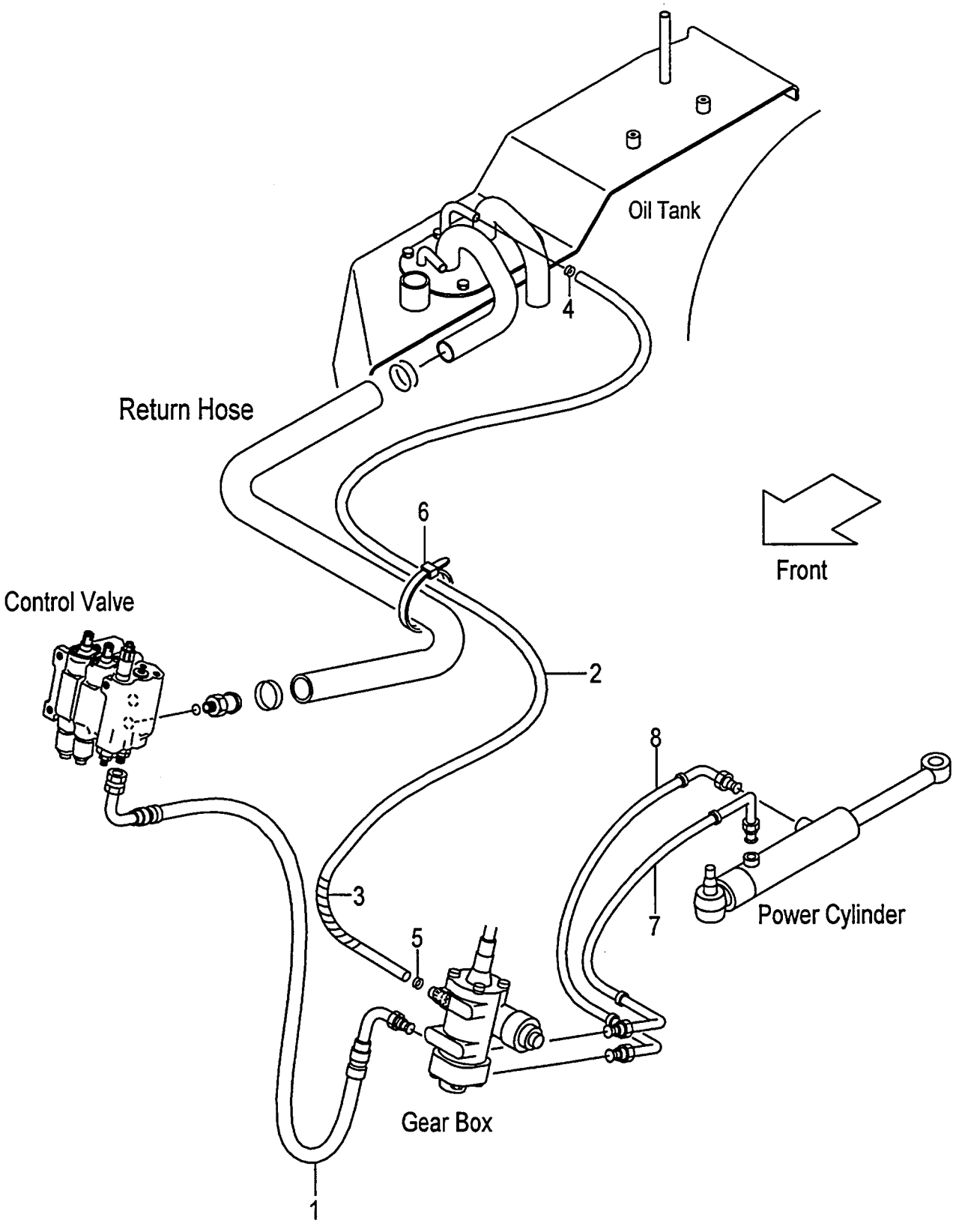

A:FD10C12 FD10T12 FD15C12 FD15T12 FD18C12 FD18T12

Item No	Part No.	Mark	Description		Req'd	Remarks : Serial No.
1	218G7-62081		HOSE	ホース	1	[EXC/PSS][EXE/PSS][EXK/PSS] [EXN/PSS]
A1	218G7-62261		HOSE-ASSY,PS-RETURN	ホースアッセン	1	[EXC/PSS][EXE/PSS][EXK/PSS] [EXN/PSS] INC.2,3
2	04710-04140		HOSE	ホース	1	[EXC/PSS][EXE/PSS][EXK/PSS] [EXN/PSS]
3	NO PART NO.	#	TUBE,SPIRAL	チューブ゛	1	[EXC/PSS][EXE/PSS][EXK/PSS] [EXN/PSS]
4	04911-00021		CLIP	クリップ゜	1	[EXC/PSS][EXE/PSS][EXK/PSS] [EXN/PSS]
5	04911-00020		CLIP	クリップ゜	1	[EXC/PSS][EXE/PSS][EXK/PSS] [EXN/PSS]
6	04913-10200		BAND	バ゛ンド゛	2	[EXC/PSS][EXE/PSS][EXK/PSS] [EXN/PSS]
7	218G7-60301		HOSE,PS,FRONT	ホース	1	[EXC/PSS][EXE/PSS][EXK/PSS] [EXN/PSS]
8	218G7-60311		HOSE,PS,REAR	ホース	1	[EXC/PSS][EXE/PSS][EXK/PSS] [EXN/PSS]

FIG.154 HYDRAULIC LINE (MAIN)(3/3)

(F6017650) ﾊｲﾄﾞﾛﾘｯｸﾗｲﾝ(3/3)

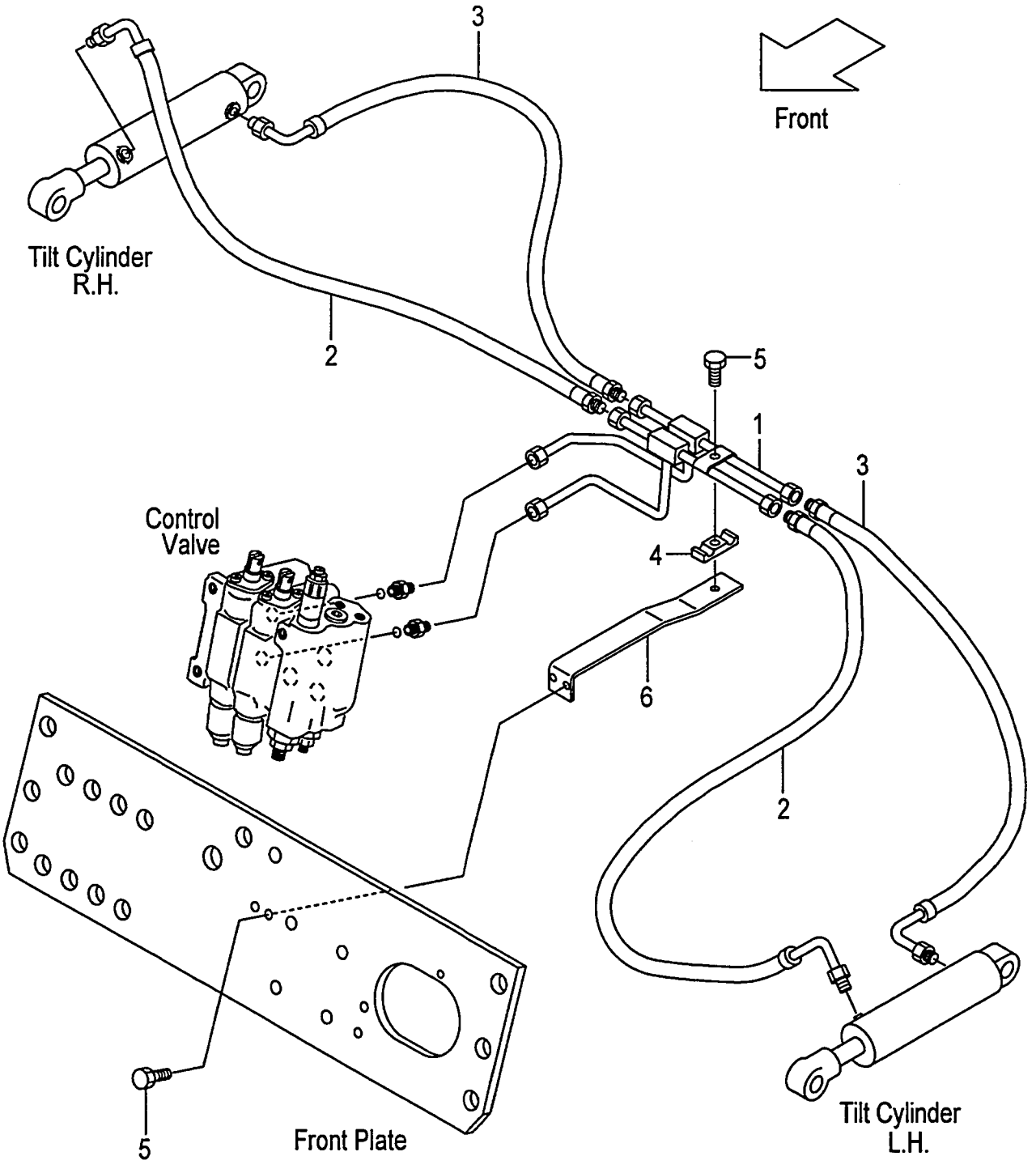

A:FD10C12 FD10T12 FD15C12 FD15T12 FD18C12 FD18T12

Item No	Part No.	Mark	Description		Req'd	Remarks : Serial No.
1	239A7-62112		PIPE,TILT	ﾊﾟｲﾌﾟ	1	
2	218G7-62061		HOSE,TILT,FRONT	ﾎｰｽ	2	
3	218G7-62071		HOSE,TILT,REAR	ﾎｰｽ	2	
4	239A7-62351		RUBBER,TILT-PIPE	ﾗﾊﾞｰ	1	
5	01183-08025		BOLT	ﾎﾞﾙﾄ	1	
6	239A7-62401		BRACKET,TILT-PIPE	ﾌﾞﾗｹｯﾄ	1	

FIG.155 HYDRAULIC LINE (TOR-CON)

(F6017670) ﾊｲﾄﾞﾛﾘｯｸﾗｲﾝ(ﾄﾙｺﾝ)

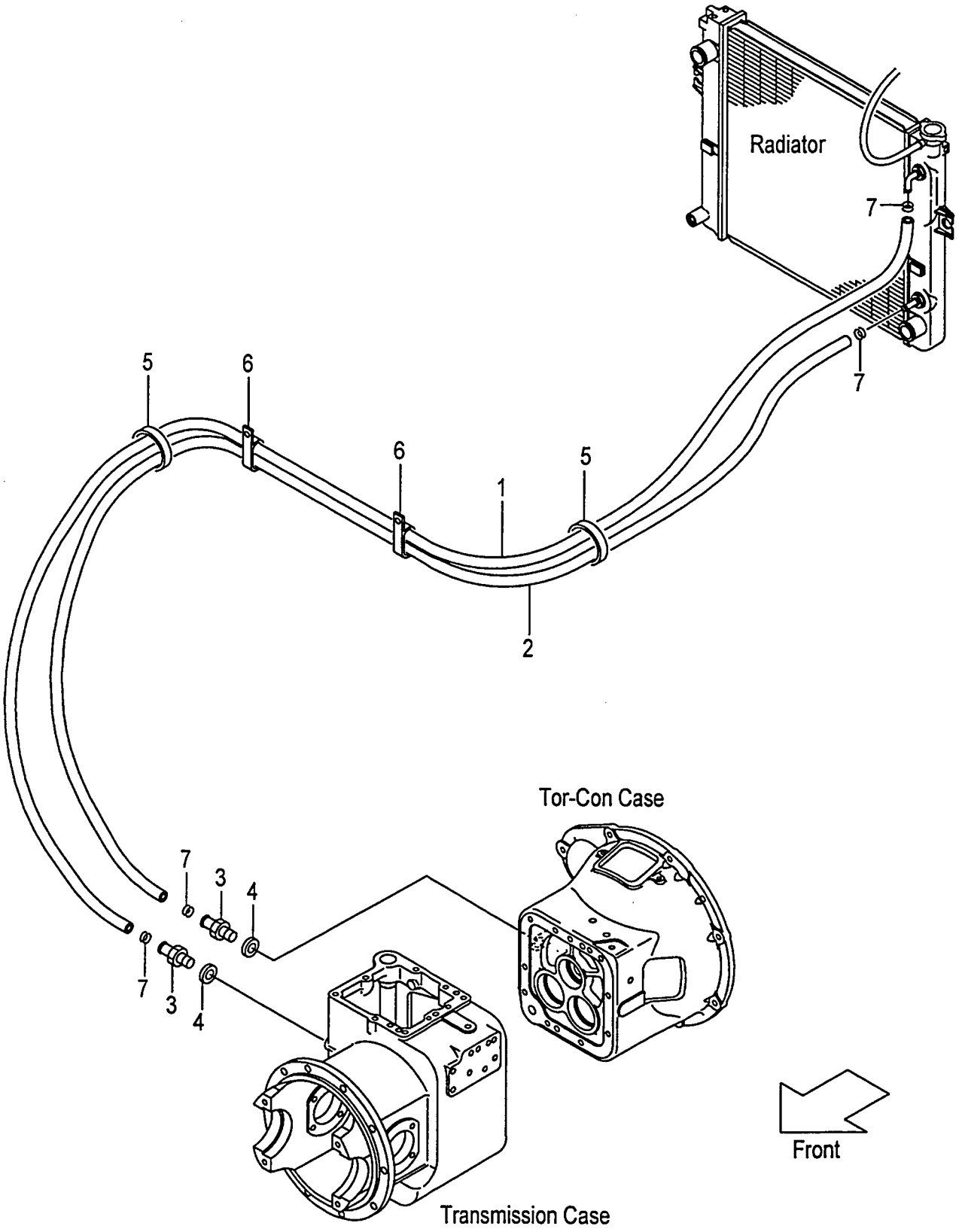

A:FD10T12 FD15T12 FD18T12

Item No	Part No.	Mark	Description		Req'd	Remarks : Serial No.
1	234B7-82101		HOSE,OIL-COOLER	ﾎｰｽ	1	
2	234B7-82111		HOSE,OIL-COOLER	ﾎｰｽ	1	
3	228U7-62221		NIPPLE	ﾆｯﾌﾟﾙ	2	
4	20802-51301		PACKING	ﾊﾟｯｷﾝｸﾞ	2	
5	04913-20380		BAND	ﾊﾞﾝﾄﾞ	2	
6	209P7-62531		CLIP	ｸﾘｯﾌﾟ	2	
7	04911-00023		CLIP	ｸﾘｯﾌﾟ	4	

FIG.156 TILT CYLINDER

(F6018510) ﾃｨﾙﾄｼﾘﾝﾀﾞ

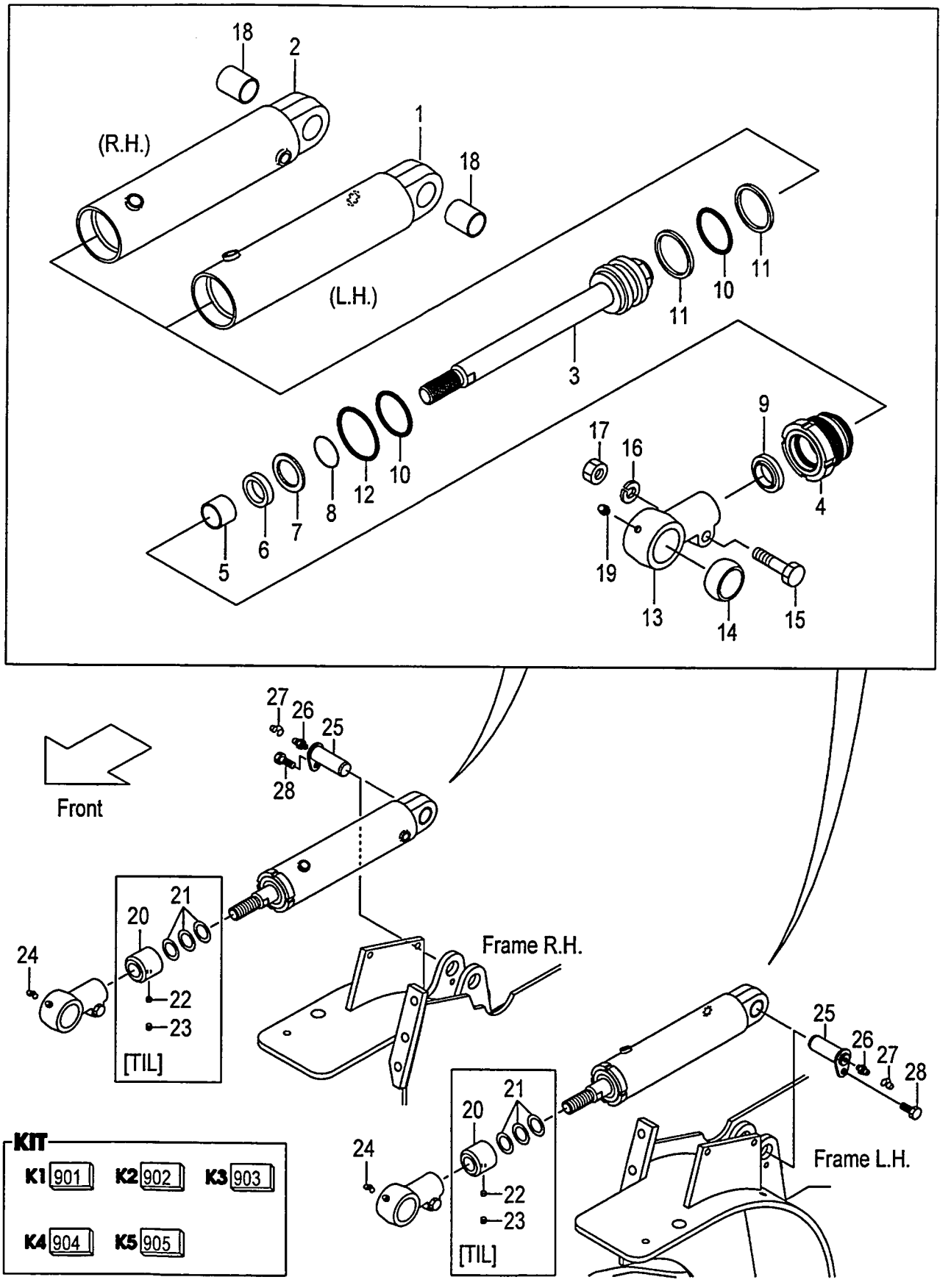

A:FD10C12 FD10T12 FD15C12 FD15T12 FD18C12 FD18T12

Item No	Part No.	Mark	Description		Req'd	Remarks : Serial No.
901	216G8-52501	K1	KIT,REPAIR	ﾘﾍﾟｱｷｯﾄ	2	INC.6,9-12
902	B-B665B-00033	K2	KIT,CYL-TUBE,LH	ｼﾘﾝﾀﾞﾁｭｰﾌﾞｷｯﾄ	1	INC.1,18
903	B-B665B-00034	K3	KIT,CYL-TUBE,RH	ｼﾘﾝﾀﾞﾁｭｰﾌﾞｷｯﾄ	1	INC.2,18
904	B-3065B-00211	K4	KIT,ROD-HEAD	ﾛｯﾄﾞﾍｯﾄﾞｷｯﾄ	2	INC.13,14
905	B-3065B-00139	K5	KIT,CYL-HEAD	ｼﾘﾝﾀﾞﾍｯﾄﾞｷｯﾄ	2	INC.4,5
A1	216G8-50103		CYL-ASSY,TILT,LH	ﾃｨﾙﾄｼﾘﾝﾀﾞｱｯｾﾝ	1	INC.1,3-19
A2	216G8-50113		CYL-ASSY,TILT,RH	ﾃｨﾙﾄｼﾘﾝﾀﾞｱｯｾﾝ	1	INC.2-19
1	NO PART NO.	#*	TUBE,CYL,LH	ﾁｭｰﾌﾞ	1	
2	NO PART NO.	#*	TUBE,CYL,RH	ﾁｭｰﾌﾞ	1	
3	B-B6127-20412		ROD,PISTON	ﾛｯﾄﾞ	2	
4	NO PART NO.	#*	HEAD,CYL	ﾍｯﾄﾞ	2	
5	B-30131-03003	*	BUSHING	ﾌﾞｯｼﾝｸﾞ	2	
6	B-30961-03012	*	U-RING	Uﾘﾝｸﾞ	2	
7	B-30151-03006		SPACER	ｽﾍﾟｰｻ	2	
8	B-30141-35012		RING,SNAP	ｽﾅｯﾌﾟﾘﾝｸﾞ	2	
9	B-30191-30025	*	RING,WIPER	ﾘﾝｸﾞ	2	
10	B-95112-05500	*	O-RING	Oﾘﾝｸﾞ	4	
11	B-95713-05500	*	RING,BACK-UP	ﾘﾝｸﾞ	4	
12	B-95121-06500	*	O-RING	Oﾘﾝｸﾞ	2	
13	NO PART NO.	#*	HEAD,ROD	ﾍｯﾄﾞ	2	
14	B-30431-35009	*	BUSHING,PIN	ﾌﾞｯｼﾝｸﾞ	2	
15	B-B6341-01401		BOLT	ﾎﾞﾙﾄ	2	
16	B-30311-01403		WASHER	ﾜｯｼｬ	2	
17	B-B6351-01401		NUT	ﾅｯﾄ	2	
18	B-30421-30005	*	BUSHING,PIN	ﾌﾞｯｼﾝｸﾞ	2	
19	B-96111-10613		NIPPLE,GREASE	ﾆｯﾌﾟﾙ	2	
20	271J8-52102		SPACER,L=125	ｽﾍﾟｰｻ	2	[TIL013](3-3 DEG.)
-	216G8-52342		SPACER,L=99	ｽﾍﾟｰｻ	2	[TIL014][TIL016] (3-6,6-6 DEG.)
-	216G8-52352		SPACER,L=66	ｽﾍﾟｰｻ	2	[TIL017](6-10 DEG.)
21	23658-52101		SHIM	ｼﾑ	6	[TIL013][TIL014] (3-3,3-6 DEG.)
-	23658-52101		SHIM	ｼﾑ	6	[TIL016][TIL017] (6-6,6-10 DEG.)
22	01066-10012		SCREW,SET	ｽｸﾘｭｾｯﾄ	2	[TIL013][TIL014] (3-3,3-6 DEG.)
-	01066-10012		SCREW,SET	ｽｸﾘｭｾｯﾄ	2	[TIL016][TIL017] (6-6,6-10 DEG.)
23	23658-52401		PLUG,NYLON	ﾌﾟﾗｸﾞ	2	[TIL013][TIL014] (3-3,3-6 DEG.)
-	23658-52401		PLUG,NYLON	ﾌﾟﾗｸﾞ	2	[TIL016][TIL017] (6-6,6-10 DEG.)
24	22199-12401		CAP,NIPPLE	ｷｬｯﾌﾟ	2	
25	216G8-52201		PIN	ﾋﾟﾝ	2	
26	04901-00100		FITTING	ﾌｨｯﾃｨﾝｸﾞ	2	
27	22199-12401		CAP,NIPPLE	ｷｬｯﾌﾟ	2	
28	216G8-52301		BOLT & WASHER	ﾎﾞﾙﾄ&ﾜｯｼｬ	2	

FIG.157 TILT BOOT [TLB][FC]

(F6018520) ﾃｨﾙﾄﾌﾞｰﾂ

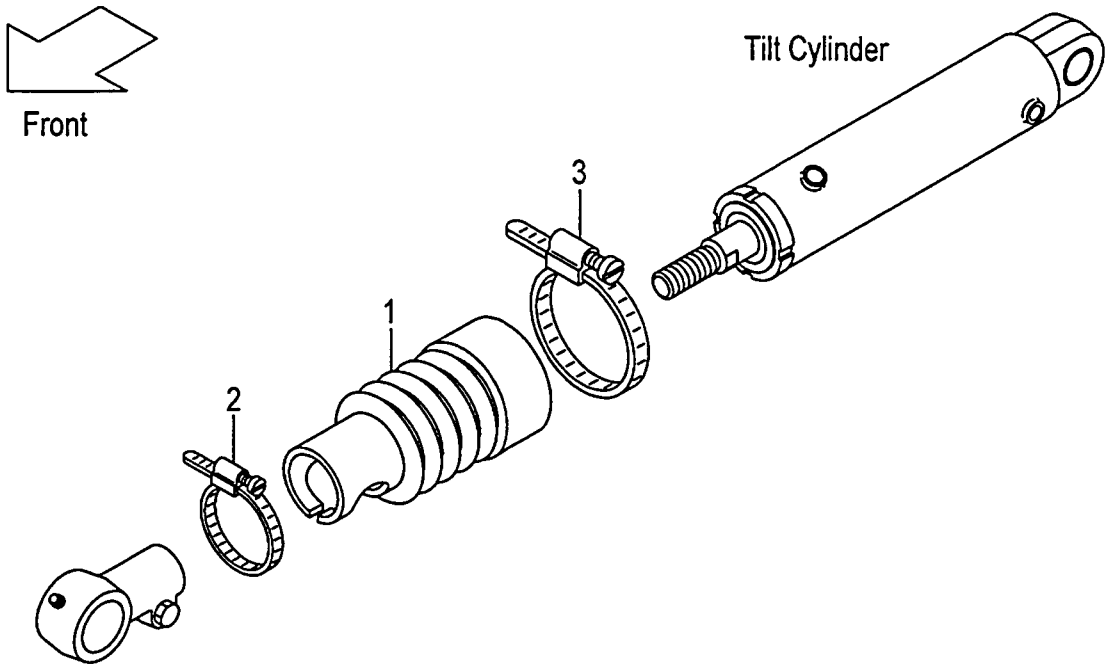

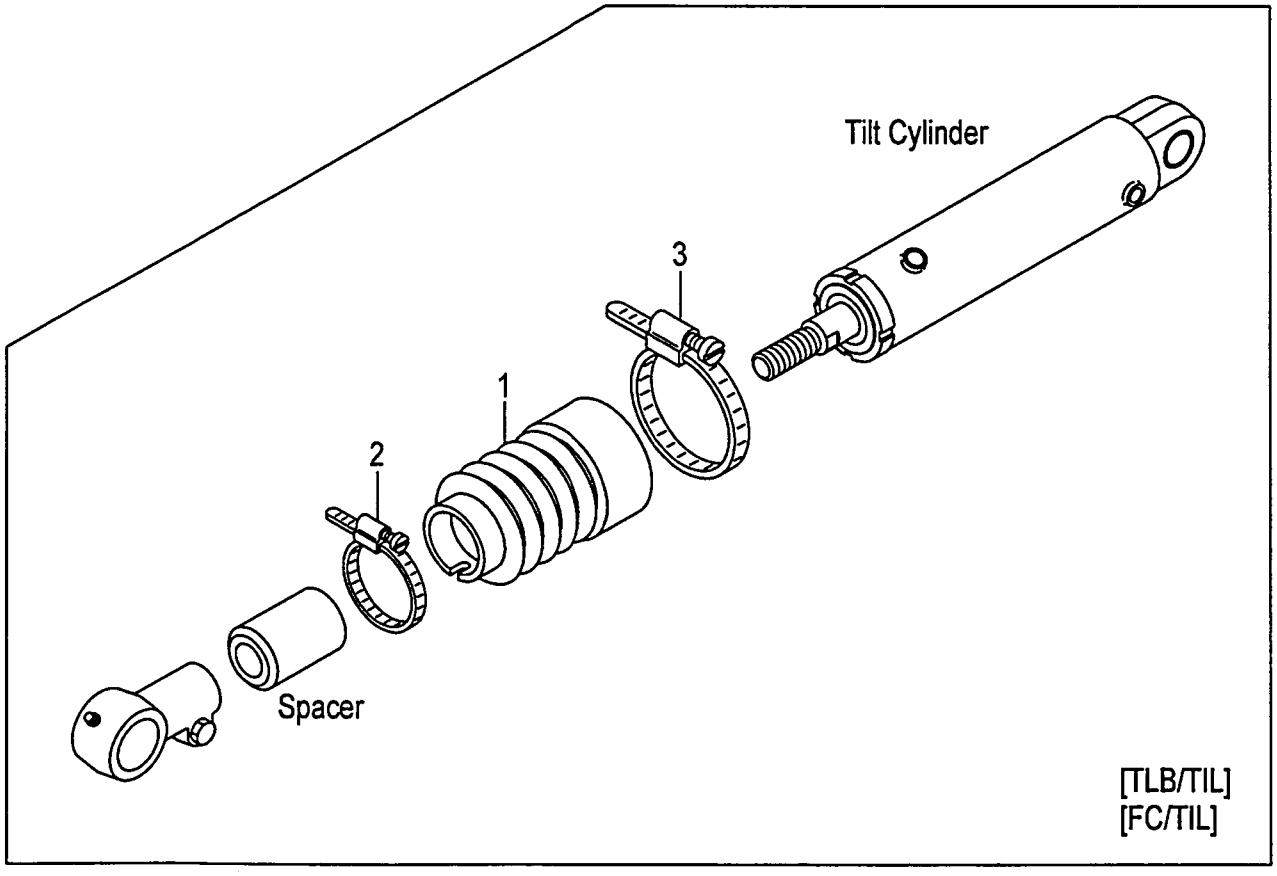

A:FD10C12 FD10T12 FD15C12 FD15T12 FD18C12 FD18T12

Item No	Part No.	Mark	Description		Req'd	Remarks : Serial No.
A1	216G8-51001		BOOT-ASSY,TILT-CYL	ﾌﾞｰﾂｱｯｾﾝ	2	[TLB][FC](6-12 DEG.) INC.1-3
-	216G8-51011		BOOT-ASSY,TILT-CYL	ﾌﾞｰﾂｱｯｾﾝ	2	[TLB/TIL013&014] (3-3,3-6 DEG.) INC.1-3
-	216G8-51011		BOOT-ASSY,TILT-CYL	ﾌﾞｰﾂｱｯｾﾝ	2	[TLB/TIL016&017] (6-6,6-10 DEG.) INC.1-3
-	216G8-51011		BOOT-ASSY,TILT-CYL	ﾌﾞｰﾂｱｯｾﾝ	2	[FC/TIL013&014](3-3,3-6 DEG.) INC.1-3
-	216G8-51011		BOOT-ASSY,TILT-CYL	ﾌﾞｰﾂｱｯｾﾝ	2	[FC/TIL016&017] (6-6,6-10 DEG.) INC.1-3
1	216G8-52251		BOOT,TILT-CYL	ﾌﾞｰﾂ	2	[TLB][FC](6-12 DEG.)
-	216G8-52261		BOOT,TILT-CYL	ﾌﾞｰﾂ	2	[TLB/TIL013&014] [FC/TIL013&014](3-3,3-6 DEG.)
-	216G8-52261		BOOT,TILT-CYL	ﾌﾞｰﾂ	2	[TLB/TIL016&017] [FC/TIL016&017] (6-6,6-10 DEG.)
2	216G8-53001		BAND,50	ﾊﾞﾝﾄﾞ	2	[TLB][FC](6-12 DEG.)
-	216G8-53011		BAND,55	ﾊﾞﾝﾄﾞ	(2)	[TLB][FC](6-12 DEG.)
-	216G8-53021		BAND,65	ﾊﾞﾝﾄﾞ	2	[TLB/TIL013&014] [FC/TIL013&014](3-3,3-6 DEG.)
-	216G8-53031		BAND,70	ﾊﾞﾝﾄﾞ	(2)	[TLB/TIL013&014] [FC/TIL013&014](3-3,3-6 DEG.)
-	216G8-53021		BAND,65	ﾊﾞﾝﾄﾞ	2	[TLB/TIL016&017] [FC/TIL016&017] (6-6,6-10 DEG.)
-	216G8-53031		BAND,70	ﾊﾞﾝﾄﾞ	(2)	[TLB/TIL016&017] [FC/TIL016&017] (6-6,6-10 DEG.)
3	216G8-53041		BAND,85	ﾊﾞﾝﾄﾞ	2	[TLB][FC]
-	216G8-53051		BAND,90	ﾊﾞﾝﾄﾞ	(2)	[TLB][FC]

FIG.158 DECAL (1/2)

(F6019110) ﾃﾞｶﾙ(1/2)

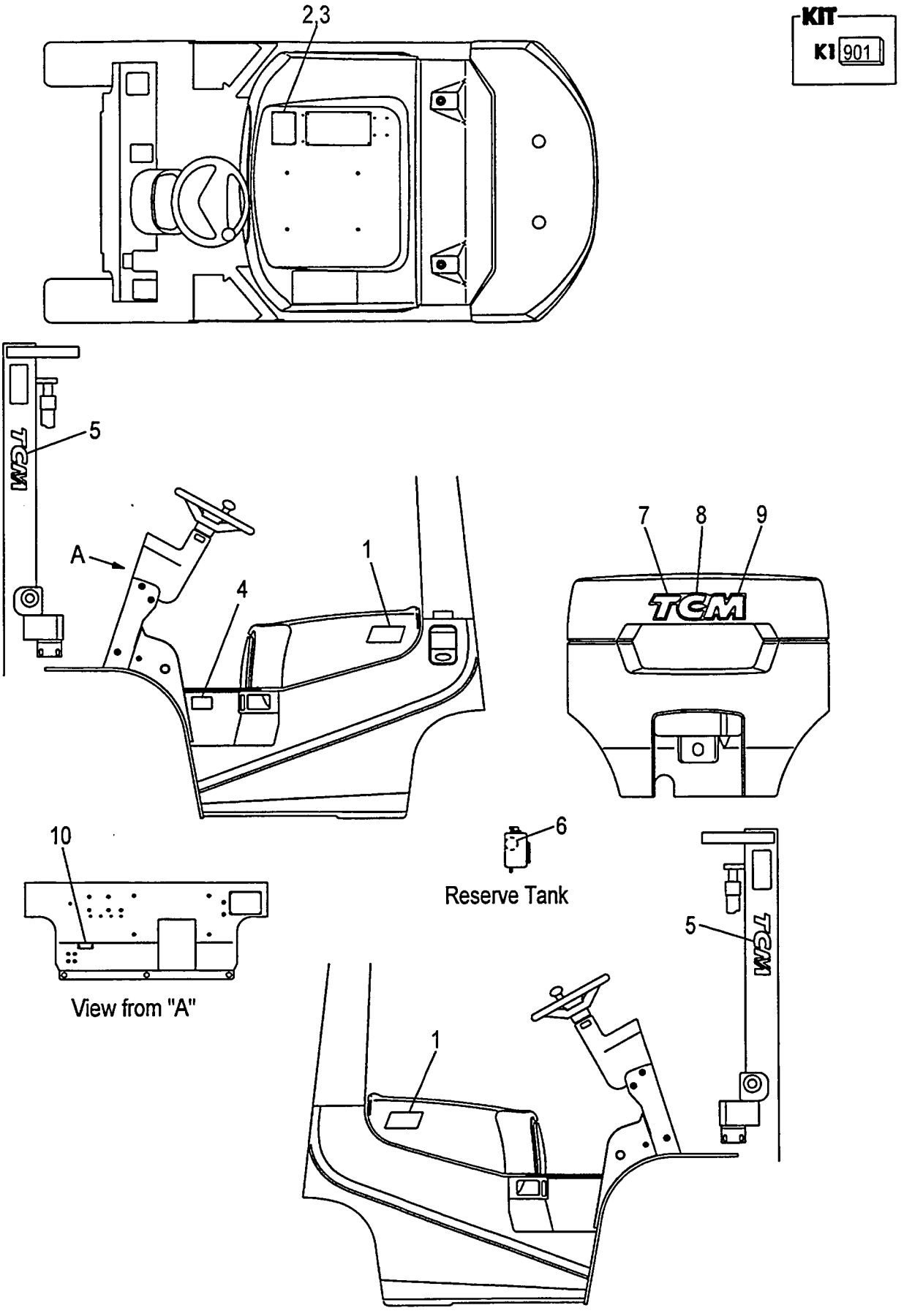

A:FD10C12 FD10T12
B:FD15C12 FD15T12
C:FD18C12 FD18T12

FIG.158
(F6019110)

Item No	Part No.	Mark	Description		Req'd	Remarks : Serial No.
901	218B9-19801	K1	KIT,DECAL	ﾃﾞｶﾙｷｯﾄ	1	INC.4-6 & FIG.159:3-9,12,13
-	218B9-19811	K1	KIT,DECAL	ﾃﾞｶﾙｷｯﾄ	1	[EXB/ENGLISH] INC.4-6 & FIG.160:3-9,16,17
-	218B9-19811	K1	KIT,DECAL	ﾃﾞｶﾙｷｯﾄ	1	[EXC] INC.4-6 & FIG.161:3-9,12,13
-	218B9-19811	K1	KIT,DECAL	ﾃﾞｶﾙｷｯﾄ	1	[EXE/ENGLISH] INC.4-6 & FIG.162:3-9,13,14
-	218B9-19811	K1	KIT,DECAL	ﾃﾞｶﾙｷｯﾄ	1	[EXK] INC.4-6 & FIG.163:3-9,12,13
-	218B9-19811	K1	KIT,DECAL	ﾃﾞｶﾙｷｯﾄ	1	[EXN/ENGLISH] INC.4-6 & FIG.164:3-9,13,14
1	218B9-12001		DECAL,MODEL-MARK,10	ﾃﾞｶﾙ	2	A
-	218G9-12001		DECAL,MODEL-MARK,15	ﾃﾞｶﾙ	2	B
-	218P9-12001		DECAL,MODEL-MARK,18	ﾃﾞｶﾙ	2	C
-	218B9-12011		DECAL,MODEL-MARK,10	ﾃﾞｶﾙ	2	A [PCL]
-	218G9-12011		DECAL,MODEL-MARK,15	ﾃﾞｶﾙ	2	B [PCL]
-	218P9-12011		DECAL,MODEL-MARK,18	ﾃﾞｶﾙ	2	C [PCL]
2	27389-12031		CHART,CAPACITY	ﾁｬｰﾄ	1	A (VM200-500)
-	27389-12061		CHART,CAPACITY	ﾁｬｰﾄ	1	A (VM550-600)
-	27399-12051		CHART,CAPACITY	ﾁｬｰﾄ	1	B (VM200-500)
-	27399-12091		CHART,CAPACITY	ﾁｬｰﾄ	1	B (VM550-600)
-	21279-12001		CHART,CAPACITY	ﾁｬｰﾄ	1	C (VM200-500)
-	21279-12011		CHART,CAPACITY	ﾁｬｰﾄ	1	C (VM550-600)
-	514A3-82331		CHART,CAPACITY	ﾁｬｰﾄ	1	[EXB/SPANISH][EXE/SPANISH]
-	514A3-82341		CHART,CAPACITY	ﾁｬｰﾄ	1	[EXB/FRENCH][EXE/FRENCH]
-	51192-82141		CHART,CAPACITY	ﾁｬｰﾄ	1	A [VM200-500/EXB/CHINESE]
-	51192-82151		CHART,CAPACITY	ﾁｬｰﾄ	1	A [VM550-600/EXB/CHINESE]
-	51232-82141		CHART,CAPACITY	ﾁｬｰﾄ	1	B [VM200-500/EXB/CHINESE]
-	51232-82151		CHART,CAPACITY	ﾁｬｰﾄ	1	B [VM550-600/EXB/CHINESE]
-	51272-82141		CHART,CAPACITY	ﾁｬｰﾄ	1	C [VM200-500/EXB/CHINESE]
-	51272-82151		CHART,CAPACITY	ﾁｬｰﾄ	1	C [VM550-600/EXB/CHINESE]
-	211R9-12011		CHART,CAPACITY	ﾁｬｰﾄ	1	A [VM200-500/EXB/RUSSIA]
-	211R9-12021		CHART,CAPACITY	ﾁｬｰﾄ	1	A [VM550-600/EXB/RUSSIA]

FIG.158 DECAL (1/2)

(F6019110) ﾃﾞｶﾙ(1/2)

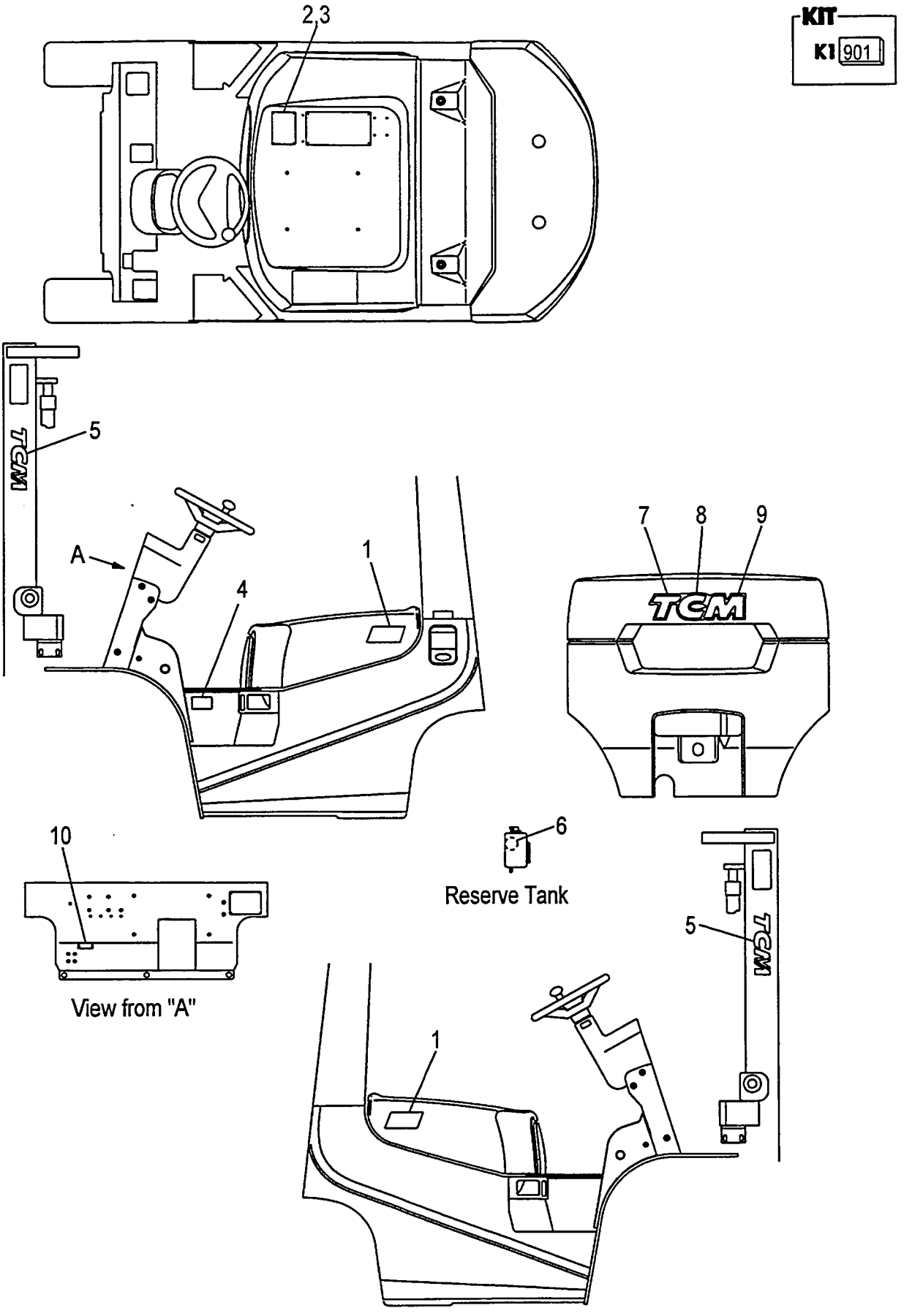

A:FD10C12 FD10T12
B:FD15C12 FD15T12
C:FD18C12 FD18T12

FIG.158
(F6019110)

Item No	Part No.	Mark	Description		Req'd	Remarks : Serial No.
-	211S9-12011		CHART,CAPACITY	ﾁｬｰﾄ	1	B [VM200-500/EXB/RUSSIA]
-	211S9-12021		CHART,CAPACITY	ﾁｬｰﾄ	1	B [VM550-600/EXB/RUSSIA]
-	217Y9-12001		CHART,CAPACITY	ﾁｬｰﾄ	1	C [VM200-500/EXB/RUSSIA]
-	217Y9-12011		CHART,CAPACITY	ﾁｬｰﾄ	1	C [VM550-600/EXB/RUSSIA]
-	510B2-92001		CHART,CAPACITY	ﾁｬｰﾄ	1	A [EXC]
-	510F2-92001		CHART,CAPACITY	ﾁｬｰﾄ	1	B [EXC]
-	510H2-92001		CHART,CAPACITY	ﾁｬｰﾄ	1	C [EXC]
-	514A3-82301		CHART,CAPACITY	ﾁｬｰﾄ	1	[EXE/ENGLISH][EXN/ENGLISH]
-	514A3-82321		CHART,CAPACITY	ﾁｬｰﾄ	1	[EXE/GERMAN]
-	514A3-82351		CHART,CAPACITY	ﾁｬｰﾄ	1	[EXE/DUTCH]
-	514A3-82361		CHART,CAPACITY	ﾁｬｰﾄ	1	[EXE/DANISH]
-	514A3-82371		CHART,CAPACITY	ﾁｬｰﾄ	1	[EXE/ITALIAN]
-	514A3-82381		CHART,CAPACITY	ﾁｬｰﾄ	1	[EXE/GREEK]
-	514A3-82391		CHART,CAPACITY	ﾁｬｰﾄ	1	[EXE/PORTUGUESE]
-	529F3-82111		CHART,CAPACITY	ﾁｬｰﾄ	1	[EXN/SWEDISH]
-	529F3-82101		CHART,CAPACITY	ﾁｬｰﾄ	1	[EXN/FINNISH]
3	02432-01008		RIVET	ﾘﾍﾞｯﾄ	4	
4	216G9-12142	*	DECAL,AIR-PRESSURE	ﾃﾞｶﾙ	1	
-	217U9-12002		DECAL,AIR-PRESSURE	ﾃﾞｶﾙ	1	[EXB/RUSSIA]
5	273A9-12242	*	DECAL,TCM	ﾃﾞｶﾙ	2	
6	23659-12101	*	DECAL,L/LIFE-COOLANT	ﾃﾞｶﾙ	1	
-	522A3-82641		DECAL,L/LIFE-COOLANT	ﾃﾞｶﾙ	1	[EXB/SPANISH][EXE/SPANISH]
-	522A3-82841		DECAL,L/LIFE-COOLANT	ﾃﾞｶﾙ	1	[EXB/FRENCH][EXE/FRENCH]
-	232W9-12051		DECAL,L/LIFE-COOLANT	ﾃﾞｶﾙ	1	[EXB/RUSSIA]
-	522A3-82441		DECAL,L/LIFE-COOLANT	ﾃﾞｶﾙ	1	[EXE/GERMAN]
-	522A3-83041		DECAL,L/LIFE-COOLANT	ﾃﾞｶﾙ	1	[EXE/DUTCH]
-	522A3-83241		DECAL,L/LIFE-COOLANT	ﾃﾞｶﾙ	1	[EXE/DANISH]
-	522A3-83441		DECAL,L/LIFE-COOLANT	ﾃﾞｶﾙ	1	[EXE/ITALIAN]
-	522A3-83641		DECAL,L/LIFE-COOLANT	ﾃﾞｶﾙ	1	[EXE/GREEK]
-	522A3-83841		DECAL,L/LIFE-COOLANT	ﾃﾞｶﾙ	1	[EXE/PORTUGUESE]
-	529F3-82091		DECAL,L/LIFE-COOLANT	ﾃﾞｶﾙ	1	[EXN/SWEDISH]
-	529F3-82081		DECAL,L/LIFE-COOLANT	ﾃﾞｶﾙ	1	[EXN/FINNISH]
7	216G9-12013		DECAL,B/WEIGHT,T	ﾃﾞｶﾙ	1	
8	216G9-12023		DECAL,B/WEIGHT,C	ﾃﾞｶﾙ	1	
9	216G9-12033		DECAL,B/WEIGHT,M	ﾃﾞｶﾙ	1	
10	219G9-92101		PLATE,LICENCE	ﾌﾟﾚｰﾄ	1	

FIG.159 DECAL (2/2)

(F6019120) ﾃﾞｶﾙ(2/2)

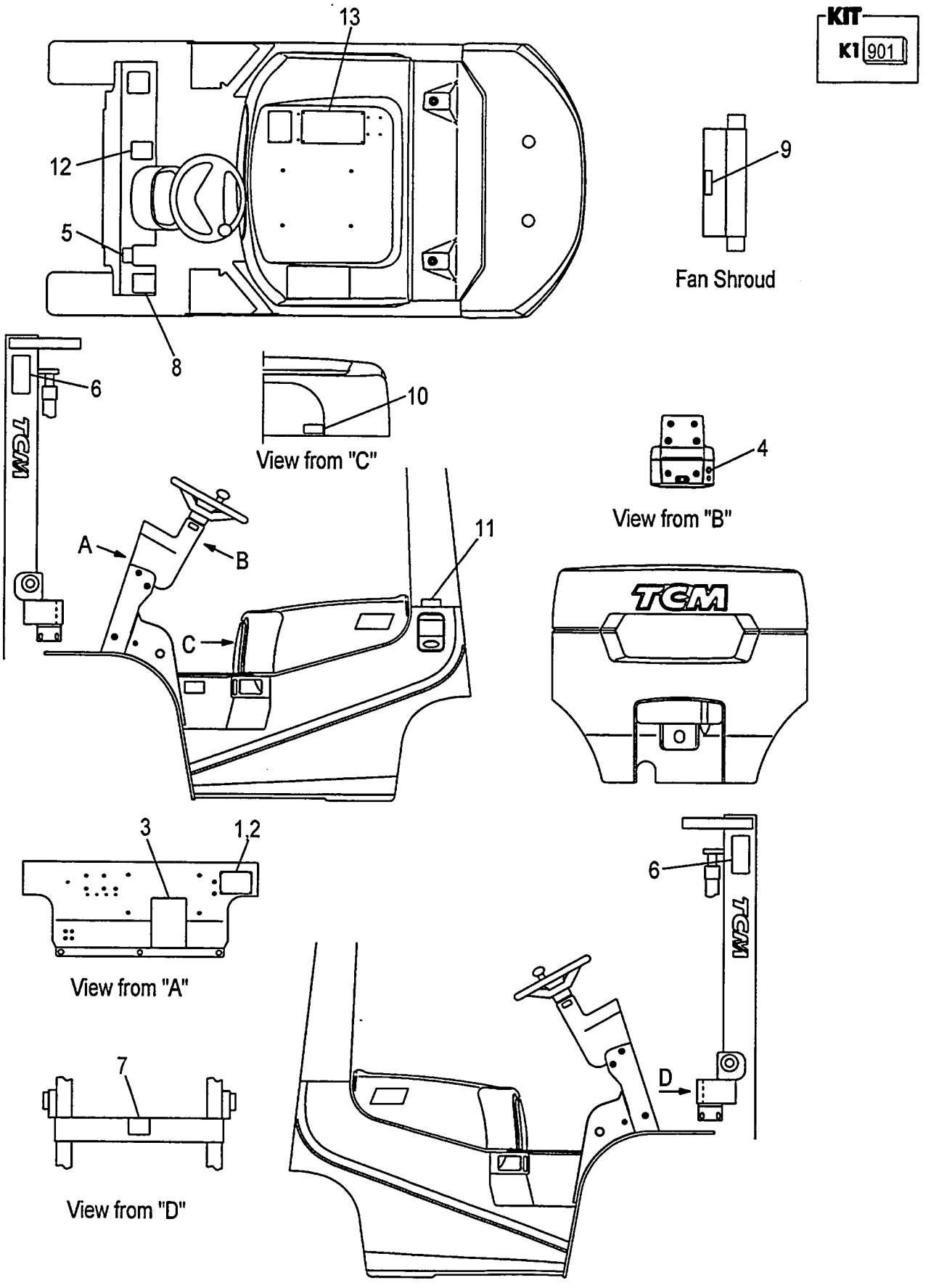

A:FD10C12 FD10T12 FD15C12 FD15T12 FD18C12 FD18T12

Item No	Part No.	Mark	Description		Req'd	Remarks : Serial No.
901	218B9-19801	K1	KIT,DECAL	ﾃﾞｶﾙｷｯﾄ	1	INC.3-9,12,13 & FIG.158:4-6
1	NO PART NO.	#	PLATE,NAME	ﾌﾟﾚｰﾄ	1	
2	216G9-12131		RIVET	ﾘﾍﾞｯﾄ	4	
3	25789-12051	*	DECAL,LUBRICATION	ﾃﾞｶﾙ	1	
4	216G9-12071	*	DECAL,STARTER-SWITCH	ﾃﾞｶﾙ	1	
5	214A5-53012	*	DECAL,BRAKE-LEVER	ﾃﾞｶﾙ	1	
6	27419-12062	*	DECAL,MAST-CAUTION	ﾃﾞｶﾙ	2	
7	27419-12072	*	DECAL,CROSS-BEAM	ﾃﾞｶﾙ	1	
8	216G9-12062	*	DECAL,TIRE-CAUTION	ﾃﾞｶﾙ	1	
9	216G9-12052	*	DECAL,FAN-CAUTION	ﾃﾞｶﾙ	1	
10	218G9-12071		DECAL,CAPACITY	ﾃﾞｶﾙ	1	
11	21159-12501		DECAL,LIGHT-OIL	ﾃﾞｶﾙ	1	
12	271A9-12251	*	DECAL,CAUTION	ﾃﾞｶﾙ	1	
13	239A9-12301	*	DECAL,WARNING-PLATE	ﾃﾞｶﾙ	1	

FIG.160 DECAL (2/2)[EXB]

(F60191B0) ﾃﾞｶﾙ(2/2)

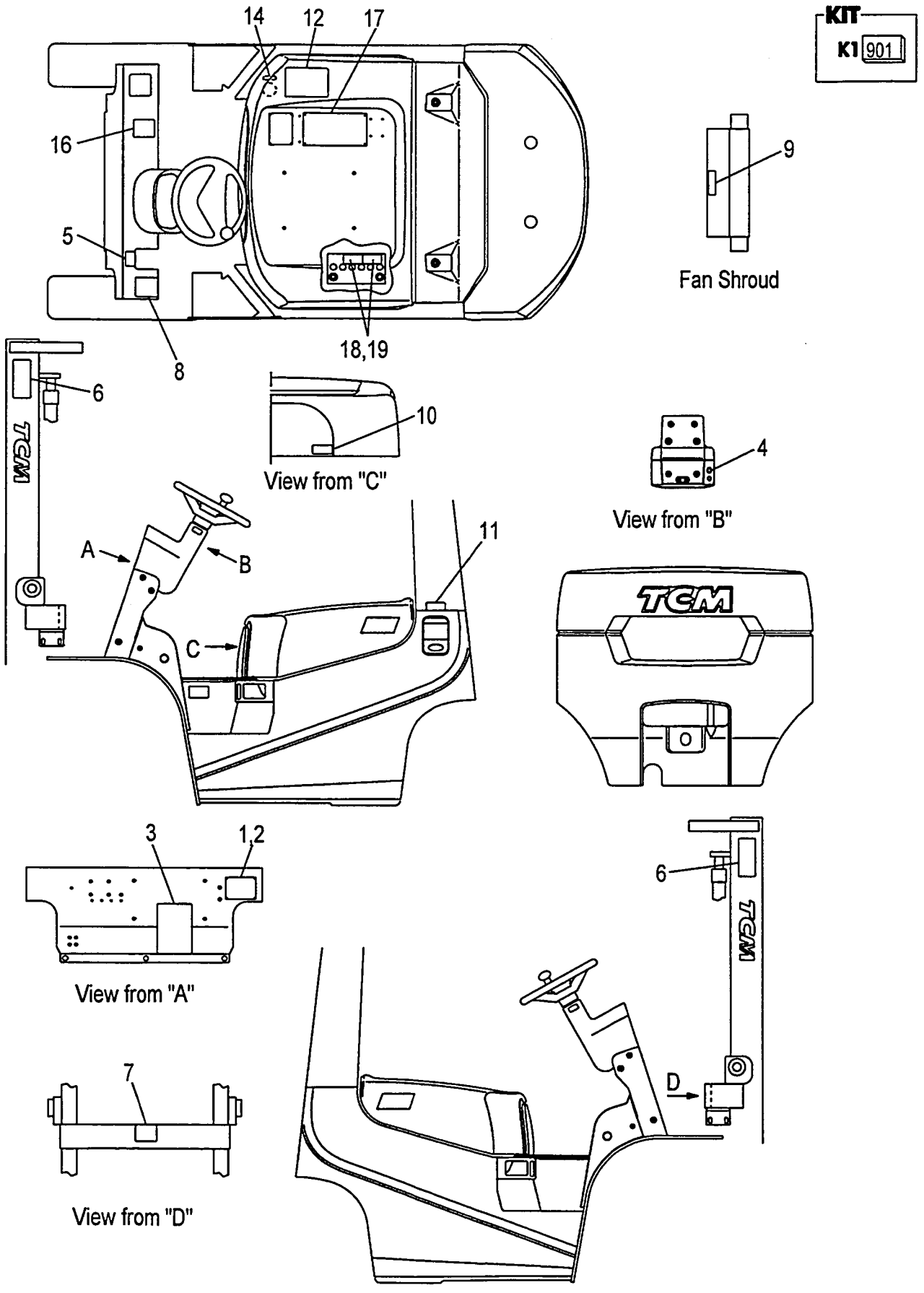

A:FD10C12 FD10T12 FD15C12 FD15T12 FD18C12 FD18T12

Item No	Part No.	Mark	Description		Req'd	Remarks : Serial No.
901	218B9-19811	K1	KIT,DECAL	ﾃﾞｶﾙｷｯﾄ	1	[EXB/ENGLISH]
						INC.3-9,16,17 & FIG.158:4-6
1	NO PART NO.	#	PLATE,NAME	ﾌﾟﾚｰﾄ	1	[EXB/ENGLISH]
-	NO PART NO.	#	PLATE,NAME	ﾌﾟﾚｰﾄ	1	[EXB/SPANISH]
-	NO PART NO.	#	PLATE,NAME	ﾌﾟﾚｰﾄ	1	[EXB/FRENCH]
-	NO PART NO.	#	PLATE,NAME	ﾌﾟﾚｰﾄ	1	[EXB/CHINESE]
-	NO PART NO.	#	PLATE,NAME	ﾌﾟﾚｰﾄ	1	[EXB/RUSSIA]
2	216G9-12131		RIVET	ﾘﾍﾞｯﾄ	4	[EXB]
3	52672-72122	*	CHART,LUBRICATION	ﾁｬｰﾄ	1	[EXB/ENGLISH]
-	53652-82352		CHART,LUBRICATION	ﾁｬｰﾄ	1	[EXB/SPANISH]
-	22959-12052		CHART,LUBRICATION	ﾁｬｰﾄ	1	[EXB/FRENCH]
-	52672-82062		CHART,LUBRICATION	ﾁｬｰﾄ	1	[EXB/CHINESE]
-	225R9-12031		CHART,LUBRICATION	ﾁｬｰﾄ	1	[EXB/RUSSIA]
4	216G9-12071	*	DECAL,STARTER-SWITCH	ﾃﾞｶﾙ	1	[EXB/ENGLISH][EXB/FRENCH]
						[EXB/CHINESE]
-	516G3-82011		DECAL,STARTER-SWITCH	ﾃﾞｶﾙ	1	[EXB/SPANISH]
-	232W9-12001		DECAL,STARTER-SWITCH	ﾃﾞｶﾙ	1	[EXB/RUSSIA]
5	514A3-82002	*	DECAL,BRAKE-LEVER	ﾃﾞｶﾙ	1	[EXB/ENGLISH]
-	514A3-82012		DECAL,BRAKE-LEVER	ﾃﾞｶﾙ	1	[EXB/SPANISH]
-	514A3-82022		DECAL,BRAKE-LEVER	ﾃﾞｶﾙ	1	[EXB/FRENCH]
-	514A2-82012		DECAL,BRAKE-LEVER	ﾃﾞｶﾙ	1	[EXB/CHINESE]
-	225R9-12112		DECAL,BRAKE-LEVER	ﾃﾞｶﾙ	1	[EXB/RUSSIA]
6	27419-12061	*	DECAL,MAST-CAUTION	ﾃﾞｶﾙ	2	[EXB/ENGLISH][EXB/SPANISH]
						[EXB/FRENCH]
-	27419-12061	*	DECAL,MAST-CAUTION	ﾃﾞｶﾙ	2	[EXB/CHINESE]
-	27419-12062		DECAL,MAST-CAUTION	ﾃﾞｶﾙ	2	[EXB/RUSSIA]
7	27419-12071	*	DECAL,CROSS-BEAM	ﾃﾞｶﾙ	1	[EXB/ENGLISH][EXB/SPANISH]
						[EXB/FRENCH]
-	27419-12071	*	DECAL,CROSS-BEAM	ﾃﾞｶﾙ	1	[EXB/CHINESE]
-	27419-12072		DECAL,CROSS-BEAM	ﾃﾞｶﾙ	1	[EXB/RUSSIA]
8	516G2-72711	*	DECAL,TIRE-CAUTION	ﾃﾞｶﾙ	1	[EXB/ENGLISH]
-	516G3-82211		DECAL,TIRE-CAUTION	ﾃﾞｶﾙ	1	[EXB/SPANISH]
-	516G3-82221		DECAL,TIRE-CAUTION	ﾃﾞｶﾙ	1	[EXB/FRENCH]
-	516G2-82061		DECAL,TIRE-CAUTION	ﾃﾞｶﾙ	1	[EXB/CHINESE]
-	232W9-12021		DECAL,TIRE-CAUTION	ﾃﾞｶﾙ	1	[EXB/RUSSIA]
9	516G2-72701	*	DECAL,FAN-CAUTION	ﾃﾞｶﾙ	1	[EXB/ENGLISH]
-	516G3-82111		DECAL,FAN-CAUTION	ﾃﾞｶﾙ	1	[EXB/SPANISH]
-	516G3-82121		DECAL,FAN-CAUTION	ﾃﾞｶﾙ	1	[EXB/FRENCH]
-	516G2-82051		DECAL,FAN-CAUTION	ﾃﾞｶﾙ	1	[EXB/CHINESE]
-	232W9-12011		DECAL,FAN-CAUTION	ﾃﾞｶﾙ	1	[EXB/RUSSIA]
10	518G2-82181		DECAL,CAPACITY	ﾃﾞｶﾙ	1	[EXB/ENGLISH]
-	518H3-82001		DECAL,CAPACITY	ﾃﾞｶﾙ	1	[EXB/SPANISH]
-	518H3-82011		DECAL,CAPACITY	ﾃﾞｶﾙ	1	[EXB/FRENCH]
-	518G2-82281		DECAL,CAPACITY	ﾃﾞｶﾙ	1	[EXB/CHINESE]
-	219W9-12071		DECAL,CAPACITY	ﾃﾞｶﾙ	1	[EXB/RUSSIA]
11	522A2-72111		DECAL,LIGHT-OIL	ﾃﾞｶﾙ	1	[EXB/ENGLISH]
-	51152-82022		DECAL,LIGHT-OIL	ﾃﾞｶﾙ	1	[EXB/SPANISH]
-	51152-82012		DECAL,LIGHT-OIL	ﾃﾞｶﾙ	1	[EXB/FRENCH]
-	522A2-82151		DECAL,LIGHT-OIL	ﾃﾞｶﾙ	1	[EXB/CHINESE]
-	225R9-12001		DECAL,LIGHT-OIL	ﾃﾞｶﾙ	1	[EXB/RUSSIA]

FIG.160 DECAL (2/2)[EXB]

(F60191B0) ﾃﾞｶﾙ(2/2)

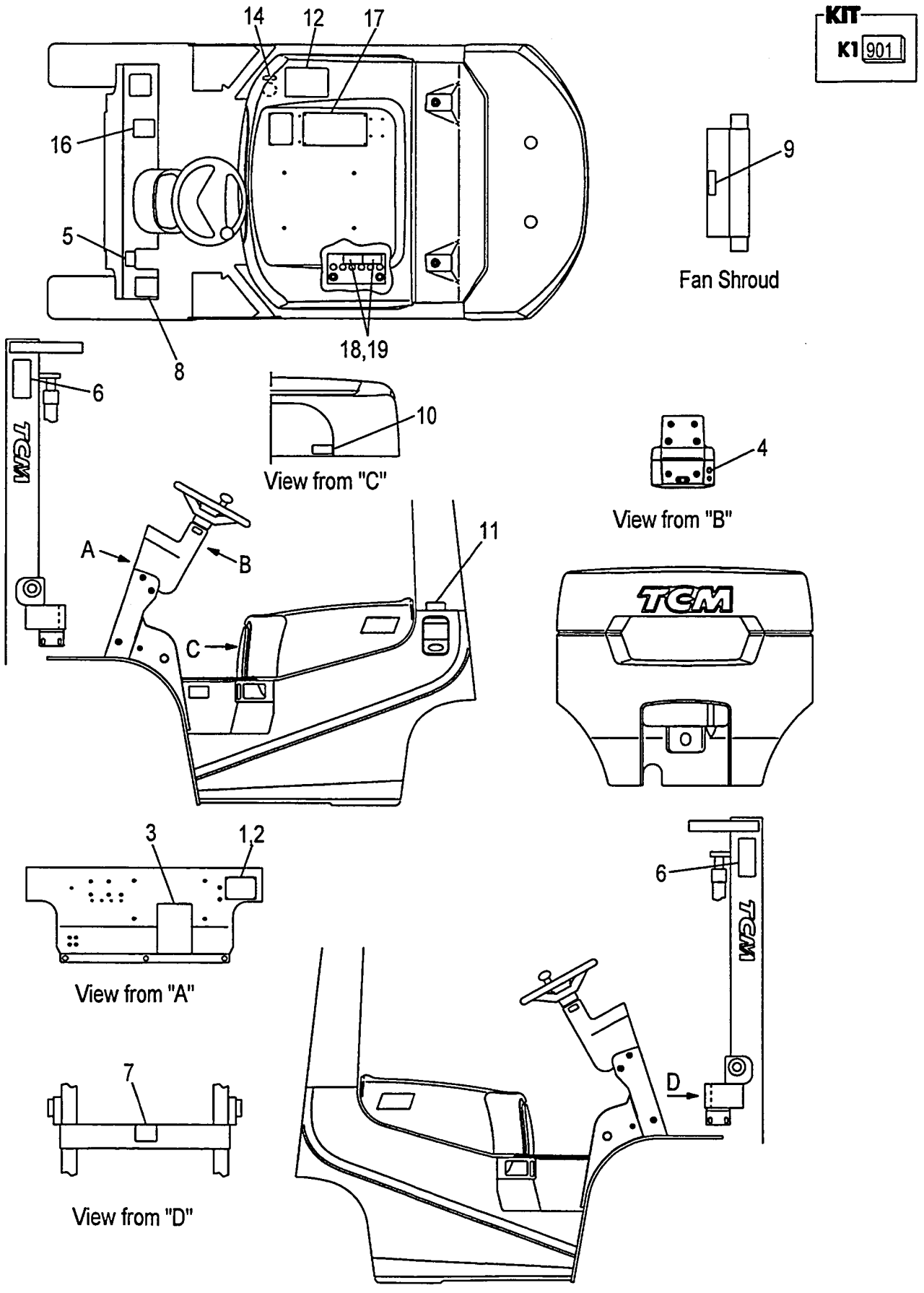

A:FD10C12 FD10T12 FD15C12 FD15T12 FD18C12 FD18T12

Item No	Part No.	Mark	Description	Req'd	Remarks : Serial No.
12	53652-82551		DECAL,CAUTION デカル	1	[EXB/CHINESE]
13	225R9-12091	†	DECAL,BATTERY-SWITCH デカル	1	[EXB/RUSSIA]
14	53652-82401		DECAL,OIL デカル	1	[EXB/SPANISH]
-	53652-82011		DECAL,OIL デカル	1	[EXB/FRENCH]
-	53652-82541		DECAL,OIL デカル	1	[EXB/CHINESE]
-	225R9-12071		DECAL,HYDRAULIC-OIL デカル	1	[EXB/RUSSIA]
15	225R9-12081	†	DECAL,PAN-HEATER-OIL デカル	1	[EXB/RUSSIA]
16	571A3-82361	‡	DECAL,CAUTION デカル	1	[EXB]
17	516G3-82801	‡	DECAL,CAUTION デカル	1	[EXB/ENGLISH]
-	516G3-82821		DECAL,CAUTION デカル	1	[EXB/SPANISH]
-	516G3-82831		DECAL,CAUTION デカル	1	[EXB/FRENCH]
-	52672-82073		DECAL,WARNING-PLATE デカル	1	[EXB/CHINESE]
-	225R9-12052		DECAL,CAUTION デカル	1	[EXB/RUSSIA]
18	534A3-82311		DECAL,BATTERY,A デカル	1	[EXB/ENGLISH]
-	534A3-82331		DECAL,BATTERY,A デカル	1	[EXB/SPANISH]
-	534A3-82341		DECAL,BATTERY,A デカル	1	[EXB/FRENCH]
-	534A3-82531		DECAL,BATTERY デカル	1	[EXB/CHINESE]
-	232W9-12101		DECAL,BATTERY,A デカル	1	[EXB/RUSSIA]
19	534A3-82421		DECAL,BATTERY,B デカル	1	[EXB/ENGLISH]
-	534A3-82441		DECAL,BATTERY,B デカル	1	[EXB/SPANISH]
-	534A3-82451		DECAL,BATTERY,B デカル	1	[EXB/FRENCH]
-	232W9-12111		DECAL,BATTERY,B デカル	1	[EXB/RUSSIA]
20	55592-82001	†	DECAL,CERTIFICATE デカル	1	[EXB]

FIG.161 DECAL (2/2)[EXC]

(F60191C0) デカル(2/2)

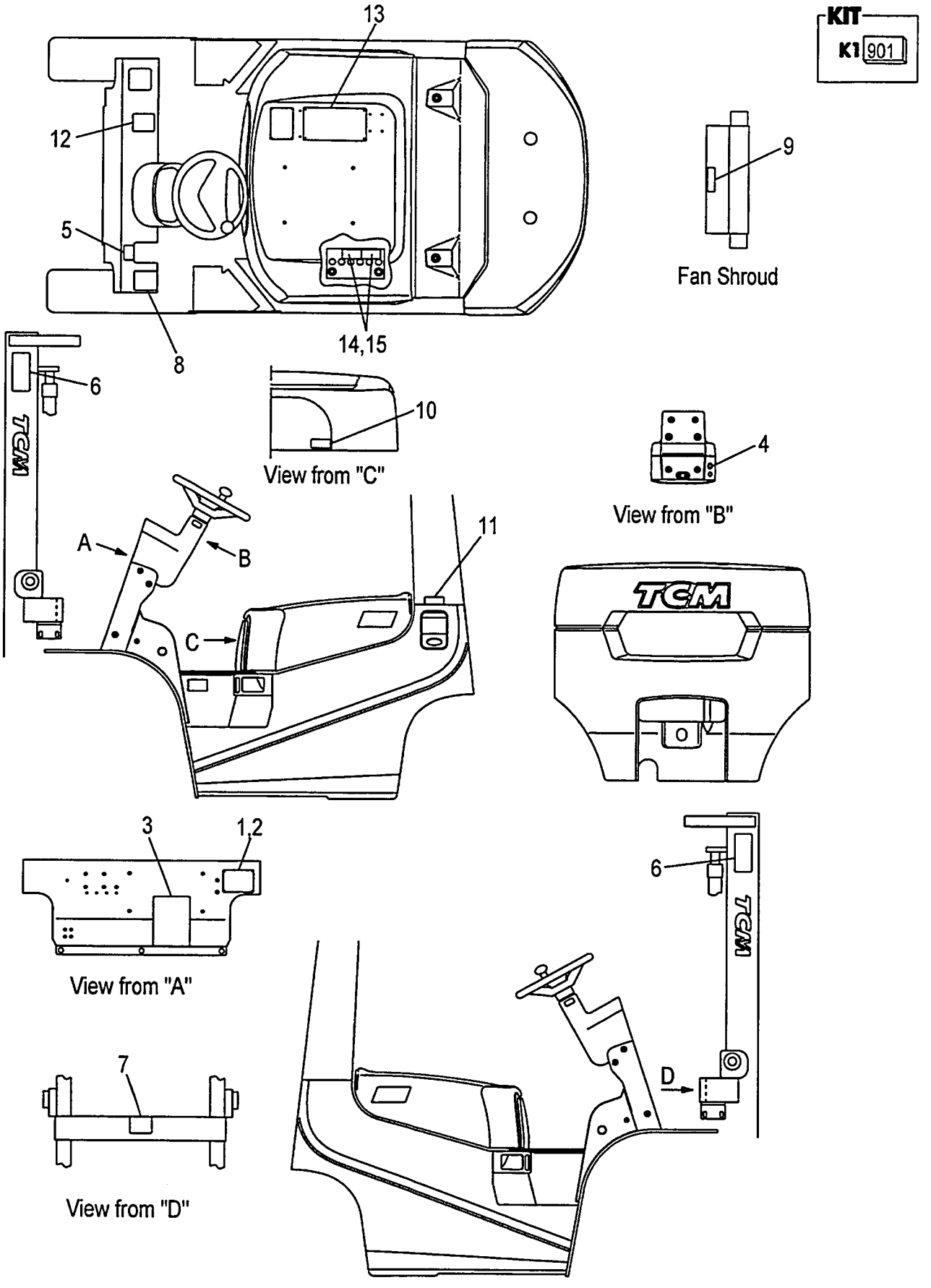

A:FD10C12 FD10T12 FD15C12 FD15T12 FD18C12 FD18T12

Item No	Part No.	Mark	Description		Req'd	Remarks : Serial No.
901	218B9-19811	K1	KIT,DECAL	ﾃﾞｶﾙｷｯﾄ	1	[EXC]
						INC.3-9,12,13 & FIG.158:4-6
1	NO PART NO.	#	PLATE,NAME	ﾌﾟﾚｰﾄ	1	[EXC]
2	216G9-12131		RIVET	ﾘﾍﾞｯﾄ	4	[EXC]
3	52672-72122	*	CHART,LUBRICATION	ﾁｬｰﾄ	1	[EXC]
4	216G9-12071	*	DECAL,STARTER-SWITCH	ﾃﾞｶﾙ	1	[EXC]
5	514A3-82002	*	DECAL,BRAKE-LEVER	ﾃﾞｶﾙ	1	[EXC]
6	27419-12061	*	DECAL,MAST-CAUTION	ﾃﾞｶﾙ	2	[EXC]
7	27419-12071	*	DECAL,CROSS-BEAM	ﾃﾞｶﾙ	1	[EXC]
8	516G2-72711	*	DECAL,TIRE-CAUTION	ﾃﾞｶﾙ	1	[EXC]
9	516G2-72701	*	DECAL,FAN-CAUTION	ﾃﾞｶﾙ	1	[EXC]
10	518G2-82181		DECAL,CAPACITY	ﾃﾞｶﾙ	1	[EXC]
11	522A2-72111		DECAL,LIGHT-OIL	ﾃﾞｶﾙ	1	[EXC]
12	571A3-82361	*	DECAL,CAUTION	ﾃﾞｶﾙ	1	[EXC]
13	516G3-82801	*	DECAL,CAUTION	ﾃﾞｶﾙ	1	[EXC]
14	534A3-82311		DECAL,BATTERY,A	ﾃﾞｶﾙ	1	[EXC]
15	534A3-82421		DECAL,BATTERY,B	ﾃﾞｶﾙ	1	[EXC]
16	55592-82001	+	DECAL,CERTIFICATE	ﾃﾞｶﾙ	1	[EXC]

FIG.162 DECAL (2/2)[EXE]

(F60191E0) ﾃﾞｶﾙ(2/2)

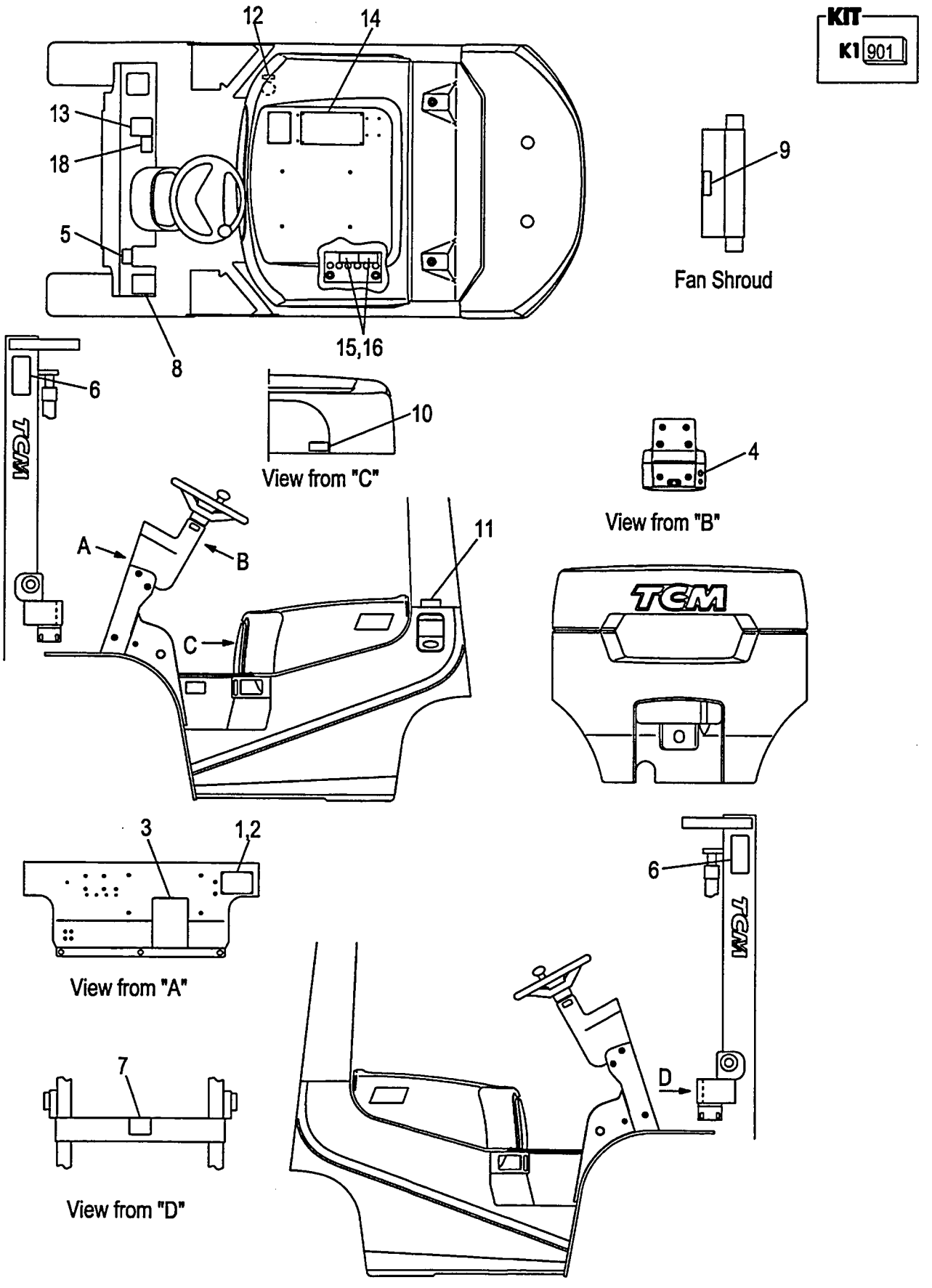

A:FD10C12 FD15C12 FD18C12
B:FD10T12 FD15T12 FD18T12

Item No	Part No.	Mark	Description		Req'd	Remarks : Serial No.
901	218B9-19811	K1	KIT,DECAL	ﾃﾞｶﾙｷｯﾄ	1	[EXE/ENGLISH]
						INC.3-9,13,14 & FIG.158:4-6
1	NO PART NO.	#	PLATE,NAME	ﾌﾟﾚｰﾄ	1	[EXE/ENGLISH]
-	NO PART NO.	#	PLATE,NAME	ﾌﾟﾚｰﾄ	1	[EXE/SPANISH]
-	NO PART NO.	#	PLATE,NAME	ﾌﾟﾚｰﾄ	1	[EXE/FRENCH]
-	NO PART NO.	#	PLATE,NAME	ﾌﾟﾚｰﾄ	1	[EXE/GERMAN]
-	NO PART NO.	#	PLATE,NAME	ﾌﾟﾚｰﾄ	1	[EXE/DUTCH]
-	NO PART NO.	#	PLATE,NAME	ﾌﾟﾚｰﾄ	1	[EXE/DANISH]
-	NO PART NO.	#	PLATE,NAME	ﾌﾟﾚｰﾄ	1	[EXE/ITALIAN]
-	NO PART NO.	#	PLATE,NAME	ﾌﾟﾚｰﾄ	1	[EXE/GREEK]
-	NO PART NO.	#	PLATE,NAME	ﾌﾟﾚｰﾄ	1	[EXE/PORTUGUESE]
2	216G9-12131		RIVET	ﾘﾍﾞｯﾄ	4	[EXE]
3	52672-72122	*	CHART,LUBRICATION	ﾁｬｰﾄ	1	[EXE/ENGLISH]
-	53652-82352		CHART,LUBRICATION	ﾁｬｰﾄ	1	[EXE/SPANISH]
-	22959-12052		CHART,LUBRICATION	ﾁｬｰﾄ	1	[EXE/FRENCH]
-	55953-02032		CHART,LUBRICATION	ﾁｬｰﾄ	1	[EXE/GERMAN]
-	522A3-83081		CHART,LUBRICATION	ﾁｬｰﾄ	1	[EXE/DUTCH]
-	522A3-83281		CHART,LUBRICATION	ﾁｬｰﾄ	1	[EXE/DANISH]
-	522A3-83481		CHART,LUBRICATION	ﾁｬｰﾄ	1	[EXE/ITALIAN]
-	522A3-83681		CHART,LUBRICATION	ﾁｬｰﾄ	1	[EXE/GREEK]
-	522A3-83881		CHART,LUBRICATION	ﾁｬｰﾄ	1	[EXE/PORTUGUESE]
4	216G9-12071	*	DECAL,STARTER-SWITCH	ﾃﾞｶﾙ	1	[EXE/ENGLISH][EXE/FRENCH]
						[EXE/PORTUGUESE]
-	516G3-82011		DECAL,STARTER-SWITCH	ﾃﾞｶﾙ	1	[EXE/SPANISH]
-	516G3-82001		DECAL,STARTER-SWITCH	ﾃﾞｶﾙ	1	[EXE/GERMAN]
-	516G3-82021		DECAL,STARTER-SWITCH	ﾃﾞｶﾙ	1	[EXE/DUTCH]
-	516G3-82031		DECAL,STARTER-SWITCH	ﾃﾞｶﾙ	1	[EXE/DANISH]
-	516G3-82041		DECAL,STARTER-SWITCH	ﾃﾞｶﾙ	1	[EXE/ITALIAN]
-	516G3-82051		DECAL,STARTER-SWITCH	ﾃﾞｶﾙ	1	[EXE/GREEK]
5	514A3-82002	*	DECAL,BRAKE-LEVER	ﾃﾞｶﾙ	1	[EXE/ENGLISH]
-	514A3-82012		DECAL,BRAKE-LEVER	ﾃﾞｶﾙ	1	[EXE/SPANISH]
-	514A3-82022		DECAL,BRAKE-LEVER	ﾃﾞｶﾙ	1	[EXE/FRENCH]
-	514A3-02002		DECAL,BRAKE-LEVER	ﾃﾞｶﾙ	1	[EXE/GERMAN]
-	514A3-82032		DECAL,BRAKE-LEVER	ﾃﾞｶﾙ	1	[EXE/DUTCH]
-	514A3-82042		DECAL,BRAKE-LEVER	ﾃﾞｶﾙ	1	[EXE/DANISH]
-	514A3-82052		DECAL,BRAKE-LEVER	ﾃﾞｶﾙ	1	[EXE/ITALIAN]
-	514A3-82062		DECAL,BRAKE-LEVER	ﾃﾞｶﾙ	1	[EXE/GREEK]
-	514A3-82072		DECAL,BRAKE-LEVER	ﾃﾞｶﾙ	1	[EXE/PORTUGUESE]
6	27419-12061	*	DECAL,MAST-CAUTION	ﾃﾞｶﾙ	2	[EXE]
7	27419-12071	*	DECAL,CROSS-BEAM	ﾃﾞｶﾙ	1	[EXE]
8	516G2-72711	*	DECAL,TIRE-CAUTION	ﾃﾞｶﾙ	1	[EXE/ENGLISH]
-	516G3-82211		DECAL,TIRE-CAUTION	ﾃﾞｶﾙ	1	[EXE/SPANISH]
-	516G3-82221		DECAL,TIRE-CAUTION	ﾃﾞｶﾙ	1	[EXE/FRENCH]
-	516G3-82201		DECAL,TIRE-CAUTION	ﾃﾞｶﾙ	1	[EXE/GERMAN]
-	516G3-82232		DECAL,TIRE-CAUTION	ﾃﾞｶﾙ	1	[EXE/DUTCH]
-	516G3-82241		DECAL,TIRE-CAUTION	ﾃﾞｶﾙ	1	[EXE/DANISH]
-	516G3-82251		DECAL,TIRE-CAUTION	ﾃﾞｶﾙ	1	[EXE/ITALIAN]
-	516G3-82261		DECAL,TIRE-CAUTION	ﾃﾞｶﾙ	1	[EXE/GREEK]
-	516G3-82271		DECAL,TIRE-CAUTION	ﾃﾞｶﾙ	1	[EXE/PORTUGUESE]
9	516G2-72701	*	DECAL,FAN-CAUTION	ﾃﾞｶﾙ	1	[EXE/ENGLISH]

FIG.162 DECAL (2/2)[EXE]

(F60191E0) ﾃﾞｶﾙ(2/2)

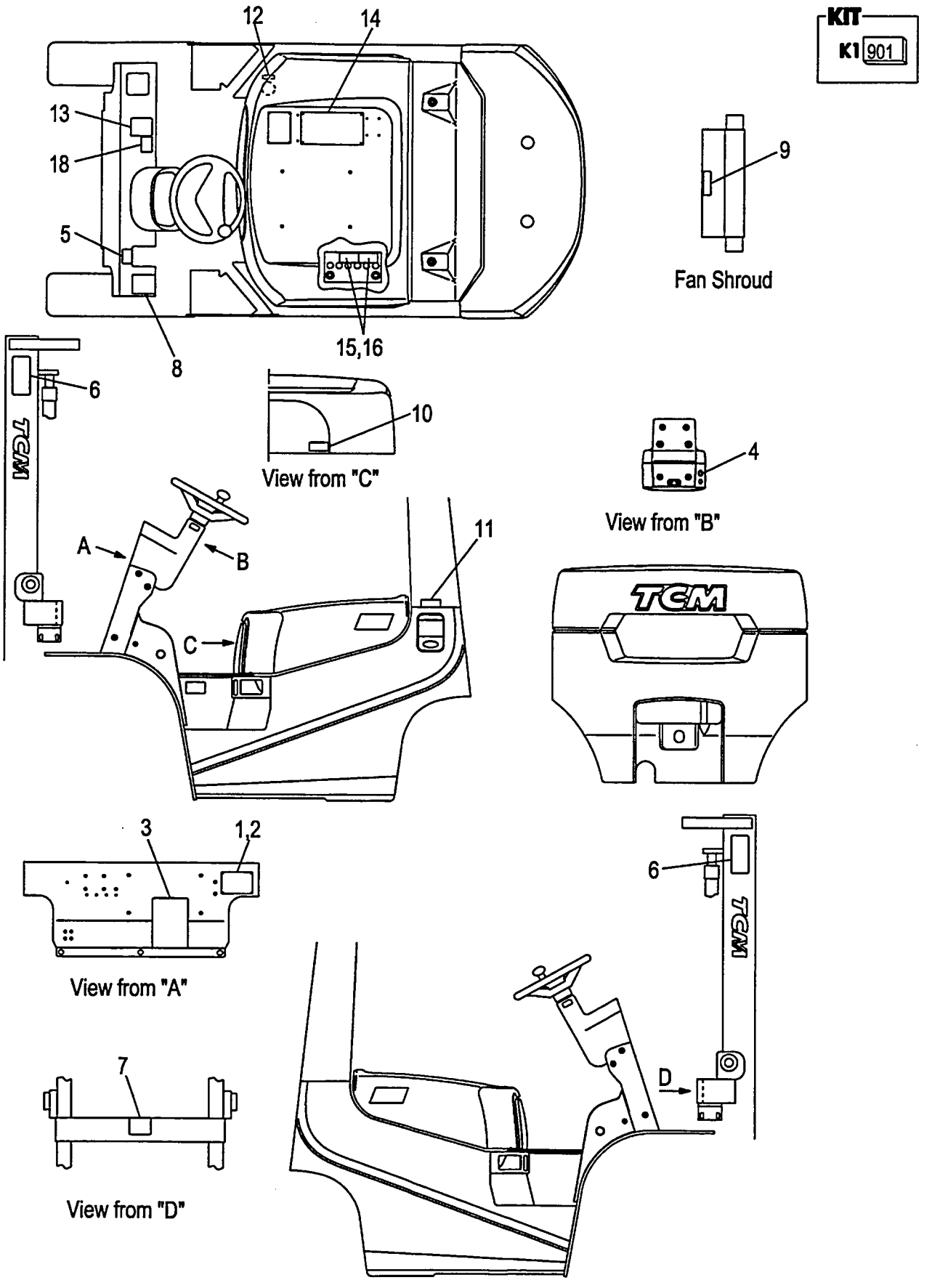

A:FD10C12 FD15C12 FD18C12
B:FD10T12 FD15T12 FD18T12

FIG.162
(F60191E0)

Item No	Part No.	Mark	Description	Req'd	Remarks : Serial No.
-	516G3-82111		DECAL,FAN-CAUTION デカル	1	[EXE/SPANISH]
-	516G3-82121		DECAL,FAN-CAUTION デカル	1	[EXE/FRENCH]
-	516G3-82101		DECAL,FAN-CAUTION デカル	1	[EXE/GERMAN]
-	516G3-82131		DECAL,FAN-CAUTION デカル	1	[EXE/DUTCH]
-	516G3-82141		DECAL,FAN-CAUTION デカル	1	[EXE/DANISH]
-	516G3-82151		DECAL,FAN-CAUTION デカル	1	[EXE/ITALIAN]
-	516G3-82161		DECAL,FAN-CAUTION デカル	1	[EXE/GREEK]
-	516G3-82171		DECAL,FAN-CAUTION デカル	1	[EXE/PORTUGUESE]
10	518G2-82181		DECAL,CAPACITY デカル	1	[EXE/ENGLISH]
-	518H3-82001		DECAL,CAPACITY デカル	1	[EXE/SPANISH]
-	518H3-82011		DECAL,CAPACITY デカル	1	[EXE/FRENCH]
-	518H3-82021		DECAL,CAPACITY デカル	1	[EXE/GERMAN]
-	518H3-82031		DECAL,CAPACITY デカル	1	[EXE/DUTCH]
-	518H3-82041		DECAL,CAPACITY デカル	1	[EXE/DANISH]
-	518H3-82051		DECAL,CAPACITY デカル	1	[EXE/ITALIAN]
-	518H3-82061		DECAL,CAPACITY デカル	1	[EXE/GREEK]
-	518H3-82071		DECAL,CAPACITY デカル	1	[EXE/PORTUGUESE]
11	522A2-72111		DECAL,LIGHT-OIL デカル	1	[EXE/ENGLISH]
-	51152-82022		DECAL,LIGHT-OIL デカル	1	[EXE/SPANISH]
-	51152-82012		DECAL,LIGHT-OIL デカル	1	[EXE/FRENCH]
-	51153-02001		DECAL,LIGHT-OIL デカル	1	[EXE/GERMAN]
-	522A3-83021		DECAL,LIGHT-OIL デカル	1	[EXE/DUTCH]
-	522A3-83221		DECAL,LIGHT-OIL デカル	1	[EXE/DANISH]
-	522A3-83421		DECAL,LIGHT-OIL デカル	1	[EXE/ITALIAN]
-	522A3-83621		DECAL,LIGHT-OIL デカル	1	[EXE/GREEK]
-	522A3-83821		DECAL,LIGHT-OIL デカル	1	[EXE/PORTUGUESE]
12	53652-82401		DECAL,OIL デカル	1	[EXE/SPANISH]
-	53652-82011		DECAL,OIL デカル	1	[EXE/FRENCH]
-	51233-02021		DECAL,OIL デカル	1	[EXE/GERMAN]
-	522A3-83061		DECAL,OIL デカル	1	[EXE/DUTCH][EXE/DANISH]
-	522A3-83461		DECAL,OIL デカル	1	[EXE/ITALIAN]
-	522A3-83661		DECAL,OIL デカル	1	[EXE/GREEK]
-	522A3-83861		DECAL,OIL デカル	1	[EXE/PORTUGUESE]
13	571A3-82361	‡	DECAL,CAUTION デカル	1	[EXE]
14	516G3-82801	‡	DECAL,CAUTION デカル	1	[EXE/ENGLISH]
-	516G3-82821		DECAL,CAUTION デカル	1	[EXE/SPANISH]
-	516G3-82831		DECAL,CAUTION デカル	1	[EXE/FRENCH]
-	516G3-82811		DECAL,CAUTION デカル	1	[EXE/GERMAN]
-	516G3-82841		DECAL,CAUTION デカル	1	[EXE/DUTCH]
-	516G3-82851		DECAL,CAUTION デカル	1	[EXE/DANISH]
-	516G3-82861		DECAL,CAUTION デカル	1	[EXE/ITALIAN]
-	516G3-82871		DECAL,CAUTION デカル	1	[EXE/GREEK]
-	516G3-82881		DECAL,CAUTION デカル	1	[EXE/PORTUGUESE]
15	534A3-82311		DECAL,BATTERY,A デカル	1	[EXE/ENGLISH]
-	534A3-82331		DECAL,BATTERY,A デカル	1	[EXE/SPANISH]
-	534A3-82341		DECAL,BATTERY,A デカル	1	[EXE/FRENCH]
-	534A3-82321		DECAL,BATTERY,A デカル	1	[EXE/GERMAN]
-	534A3-82351		DECAL,BATTERY,A デカル	1	[EXE/DUTCH]
-	534A3-82361		DECAL,BATTERY,A デカル	1	[EXE/DANISH]
-	534A3-82371		DECAL,BATTERY,A デカル	1	[EXE/ITALIAN]

FIG.162 DECAL (2/2)[EXE]

(F60191E0) ﾃﾞｶﾙ(2/2)

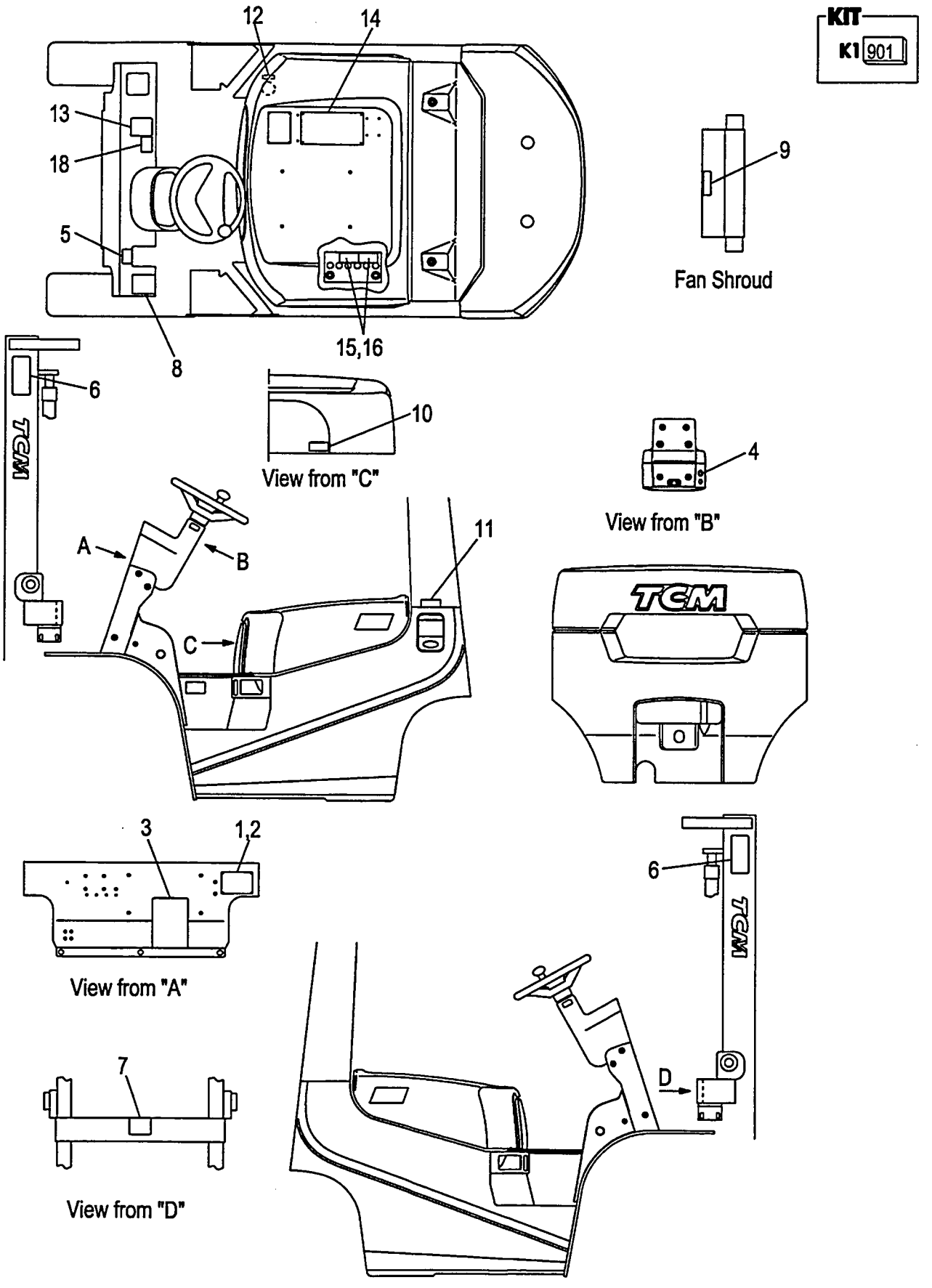

A:FD10C12 FD15C12 FD18C12
B:FD10T12 FD15T12 FD18T12

Item No	Part No.	Mark	Description	Req'd	Remarks : Serial No.
-	534A3-82381		DECAL,BATTERY,A デカル	1	[EXE/GREEK]
-	534A3-82391		DECAL,BATTERY,A デカル	1	[EXE/PORTUGUESE]
16	534A3-82421		DECAL,BATTERY,B デカル	1	[EXE/ENGLISH]
-	534A3-82441		DECAL,BATTERY,B デカル	1	[EXE/SPANISH]
-	534A3-82451		DECAL,BATTERY,B デカル	1	[EXE/FRENCH]
-	534A3-82431		DECAL,BATTERY,B デカル	1	[EXE/GERMAN]
-	534A3-82461		DECAL,BATTERY,B デカル	1	[EXE/DUTCH]
-	534A3-82471		DECAL,BATTERY,B デカル	1	[EXE/DANISH]
-	534A3-82481		DECAL,BATTERY,B デカル	1	[EXE/ITALIAN]
-	534A3-82491		DECAL,BATTERY,B デカル	1	[EXE/GREEK]
-	534A3-82501		DECAL,BATTERY,B デカル	1	[EXE/PORTUGUESE]
17	55592-82001	+	DECAL,CERTIFICATE デカル	1	[EXE]
18	535H3-82411		DECAL,CREEP-CAUTION デカル	1	B [EXE/ENGLISH]
-	535H3-82421		DECAL,CREEP-CAUTION デカル	1	B [EXE/SPANISH]
-	535H3-82431		DECAL,CREEP-CAUTION デカル	1	B [EXE/FRENCH]
-	535H3-82441		DECAL,CREEP-CAUTION デカル	1	B [EXE/GERMAN]
-	535H3-82451		DECAL,CREEP-CAUTION デカル	1	B [EXE/DUTCH]
-	535H3-82461		DECAL,CREEP-CAUTION デカル	1	B [EXE/DANISH]
-	535H3-82471		DECAL,CREEP-CAUTION デカル	1	B [EXE/ITALIAN]
-	535H3-82481		DECAL,CREEP-CAUTION デカル	1	B [EXE/GREEK]
-	535H3-82491		DECAL,CREEP-CAUTION デカル	1	B [EXE/PORTUGUESE]

FIG.163 DECAL (2/2)[EXK]

(F60191K0) ﾃﾞｶﾙ(2/2)

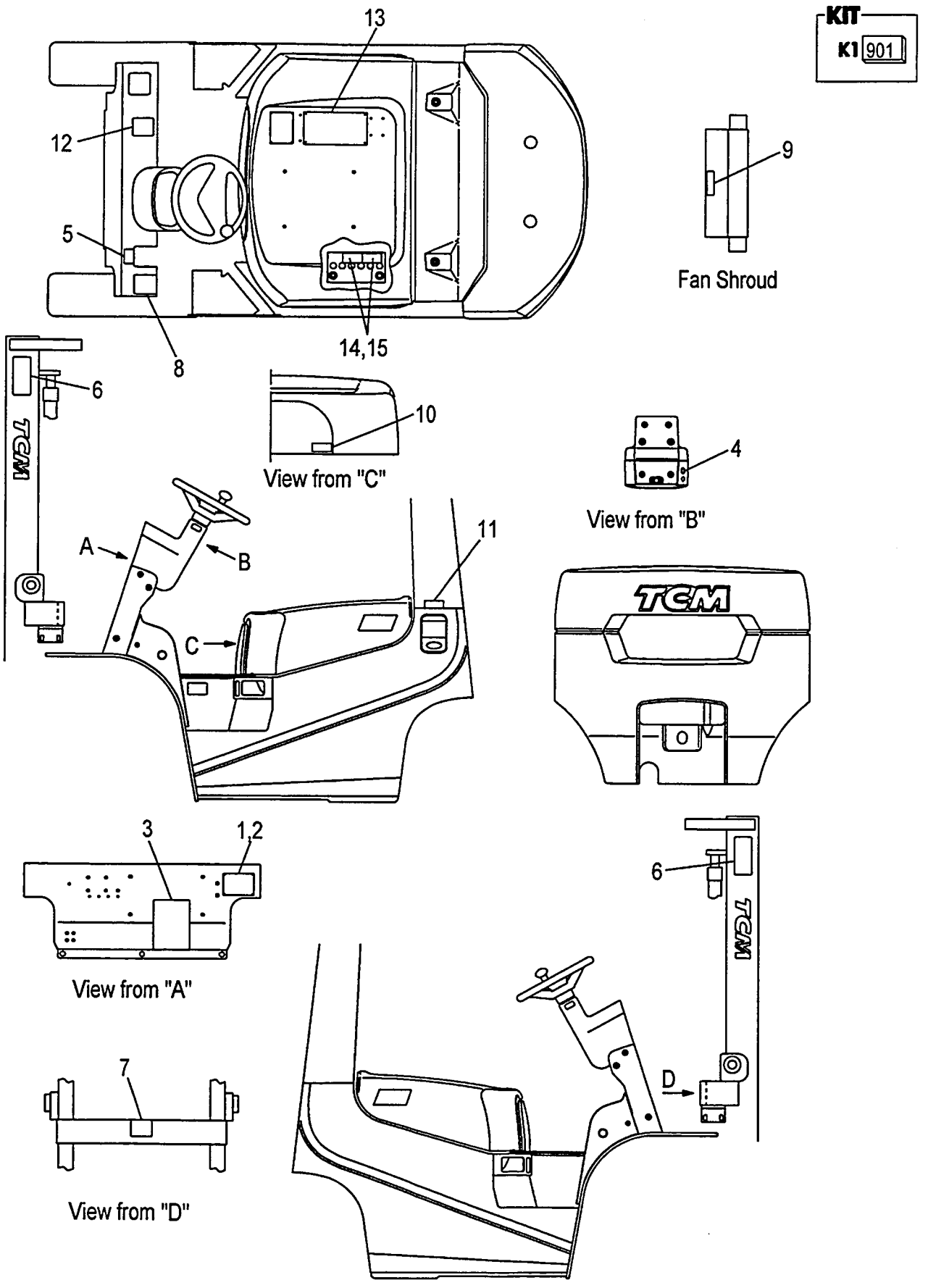

A:FD10C12 FD10T12 FD15C12 FD15T12 FD18C12 FD18T12

Item No	Part No.	Mark	Description		Req'd	Remarks : Serial No.
901	218B9-19811	K1	KIT,DECAL	ﾃﾞｶﾙｷｯﾄ	1	[EXK]
						INC.3-9,12,13 & FIG.158:4-6
1	NO PART NO.	#	PLATE,NAME	ﾌﾟﾚｰﾄ	1	[EXK]
2	216G9-12131		RIVET	ﾘﾍﾞｯﾄ	4	[EXK]
3	52672-72122	*	CHART,LUBRICATION	ﾁｬｰﾄ	1	[EXK]
4	216G9-12071	*	DECAL,STARTER-SWITCH	ﾃﾞｶﾙ	1	[EXK]
5	514A3-82002	*	DECAL,BRAKE-LEVER	ﾃﾞｶﾙ	1	[EXK]
6	27419-12061	*	DECAL,MAST-CAUTION	ﾃﾞｶﾙ	2	[EXK]
7	27419-12071	*	DECAL,CROSS-BEAM	ﾃﾞｶﾙ	1	[EXK]
8	516G2-72711	*	DECAL,TIRE-CAUTION	ﾃﾞｶﾙ	1	[EXK]
9	516G2-72701	*	DECAL,FAN-CAUTION	ﾃﾞｶﾙ	1	[EXK]
10	518G2-82181		DECAL,CAPACITY	ﾃﾞｶﾙ	1	[EXK]
11	522A2-72111		DECAL,LIGHT-OIL	ﾃﾞｶﾙ	1	[EXK]
12	571A3-82361	*	DECAL,CAUTION	ﾃﾞｶﾙ	1	[EXK]
13	516G3-82801	*	DECAL,CAUTION	ﾃﾞｶﾙ	1	[EXK]
14	534A3-82311		DECAL,BATTERY,A	ﾃﾞｶﾙ	1	[EXK]
15	534A3-82421		DECAL,BATTERY,B	ﾃﾞｶﾙ	1	[EXK]
16	55592-82001	+	DECAL,CERTIFICATE	ﾃﾞｶﾙ	1	[EXK]

FIG.164 DECAL (2/2)[EXN]

(F60191N0) ﾃﾞｶﾙ(2/2)

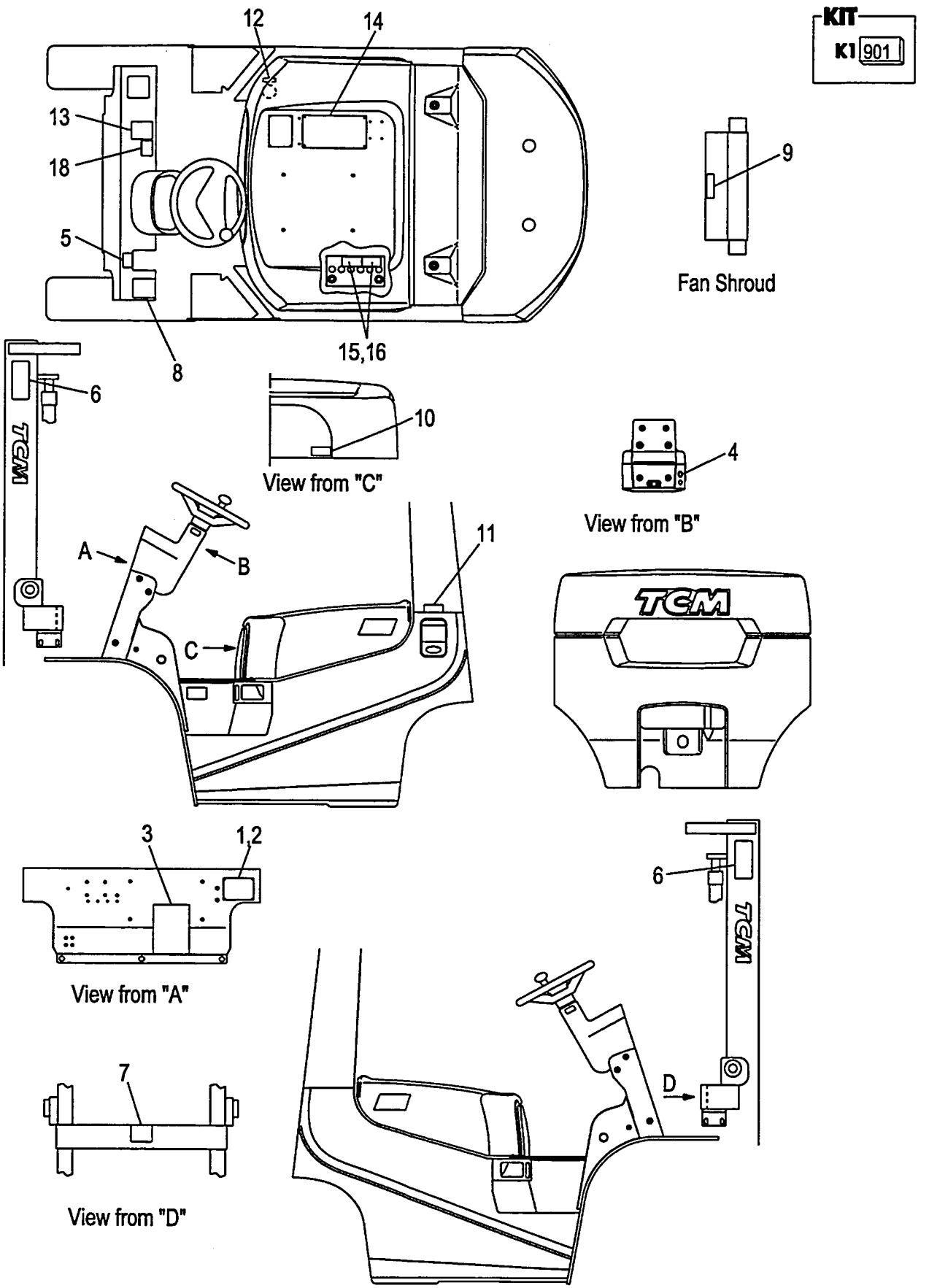

A:FD10C12 FD15C12 FD18C12
B:FD10T12 FD15T12 FD18T12

Item No	Part No.	Mark	Description		Req'd	Remarks : Serial No.
901	218B9-19811	K1	KIT,DECAL	ﾃﾞｶﾙｷｯﾄ	1	[EXN/ENGLISH]
						INC.3-9,13,14 & FIG.158:4-6
1	NO PART NO.	#	PLATE,NAME	ﾌﾟﾚｰﾄ	1	[EXN/ENGLISH]
-	NO PART NO.	#	PLATE,NAME	ﾌﾟﾚｰﾄ	1	[EXN/SWEDISH]
-	NO PART NO.	#	PLATE,NAME	ﾌﾟﾚｰﾄ	1	[EXN/FINNISH]
2	216G9-12131		RIVET	ﾘﾍﾞｯﾄ	4	[EXN]
3	52672-72122	*	CHART,LUBRICATION	ﾁｬｰﾄ	1	[EXN/ENGLISH]
-	529F3-82171		CHART,LUBRICATION	ﾁｬｰﾄ	1	[EXN/SWEDISH]
-	529F3-82161		CHART,LUBRICATION	ﾁｬｰﾄ	1	[EXN/FINNISH]
4	216G9-12071	*	DECAL,STARTER-SWITCH	ﾃﾞｶﾙ	1	[EXN/ENGLISH]
-	516G3-82071		DECAL,STARTER-SWITCH	ﾃﾞｶﾙ	1	[EXN/SWEDISH]
-	516G3-82061		DECAL,STARTER-SWITCH	ﾃﾞｶﾙ	1	[EXN/FINNISH]
5	514A3-82002	*	DECAL,BRAKE-LEVER	ﾃﾞｶﾙ	1	[EXN/ENGLISH]
-	529F3-82252		DECAL,BRAKE-LEVER	ﾃﾞｶﾙ	1	[EXN/SWEDISH]
-	529F3-82242		DECAL,BRAKE-LEVER	ﾃﾞｶﾙ	1	[EXN/FINNISH]
6	27419-12061	*	DECAL,MAST-CAUTION	ﾃﾞｶﾙ	2	[EXN]
7	27419-12071	*	DECAL,CROSS-BEAM	ﾃﾞｶﾙ	1	[EXN]
8	516G2-72711	*	DECAL,TIRE-CAUTION	ﾃﾞｶﾙ	1	[EXN/ENGLISH]
-	516G3-82291		DECAL,TIRE-CAUTION	ﾃﾞｶﾙ	1	[EXN/SWEDISH]
-	516G3-82281		DECAL,TIRE-CAUTION	ﾃﾞｶﾙ	1	[EXN/FINNISH]
9	516G2-72701	*	DECAL,FAN-CAUTION	ﾃﾞｶﾙ	1	[EXN/ENGLISH]
-	516G3-82191		DECAL,FAN-CAUTION	ﾃﾞｶﾙ	1	[EXN/SWEDISH]
-	516G3-82181		DECAL,FAN-CAUTION	ﾃﾞｶﾙ	1	[EXN/FINNISH]
10	518G2-82181		DECAL,CAPACITY	ﾃﾞｶﾙ	1	[EXN/ENGLISH]
-	518H3-82091		DECAL,CAPACITY	ﾃﾞｶﾙ	1	[EXN/SWEDISH]
-	518H3-82081		DECAL,CAPACITY	ﾃﾞｶﾙ	1	[EXN/FINNISH]
11	522A2-72111		DECAL,LIGHT-OIL	ﾃﾞｶﾙ	1	[EXN/ENGLISH]
-	529F3-82051		DECAL,LIGHT-OIL	ﾃﾞｶﾙ	1	[EXN/SWEDISH]
-	529F3-82041		DECAL,LIGHT-OIL	ﾃﾞｶﾙ	1	[EXN/FINNISH]
12	529F3-82071		DECAL,OIL	ﾃﾞｶﾙ	1	[EXN/SWEDISH]
-	529F3-82061		DECAL,OIL	ﾃﾞｶﾙ	1	[EXN/FINNISH]
13	571A3-82361	*	DECAL,CAUTION	ﾃﾞｶﾙ	1	[EXN]
14	516G3-82801	*	DECAL,CAUTION	ﾃﾞｶﾙ	1	[EXN/ENGLISH]
-	516G3-82891		DECAL,CAUTION	ﾃﾞｶﾙ	1	[EXN/SWEDISH]
-	516G3-82901		DECAL,CAUTION	ﾃﾞｶﾙ	1	[EXN/FINNISH]
15	534A3-82311		DECAL,BATTERY,A	ﾃﾞｶﾙ	1	[EXN/ENGLISH]
-	534A3-82411		DECAL,BATTERY,A	ﾃﾞｶﾙ	1	[EXN/SWEDISH]
-	534A3-82401		DECAL,BATTERY,A	ﾃﾞｶﾙ	1	[EXN/FINNISH]
16	534A3-82421		DECAL,BATTERY,B	ﾃﾞｶﾙ	1	[EXN/ENGLISH]
-	534A3-82521		DECAL,BATTERY,B	ﾃﾞｶﾙ	1	[EXN/SWEDISH]
-	534A3-82511		DECAL,BATTERY,B	ﾃﾞｶﾙ	1	[EXN/FINNISH]
17	55592-82001	+	DECAL,CERTIFICATE	ﾃﾞｶﾙ	1	[EXN]
18	535H3-82411		DECAL,CREEP-CAUTION	ﾃﾞｶﾙ	1	B
						[EXN/ENGLISH]
-	535H3-82511		DECAL,CREEP-CAUTION	ﾃﾞｶﾙ	1	B
						[EXN/SWEDISH]
-	535H3-82501		DECAL,CREEP-CAUTION	ﾃﾞｶﾙ	1	B
						[EXN/FINNISH]

FIG.165 SERVICE TOOL [TO][EX]

(F6019210) サービスツール

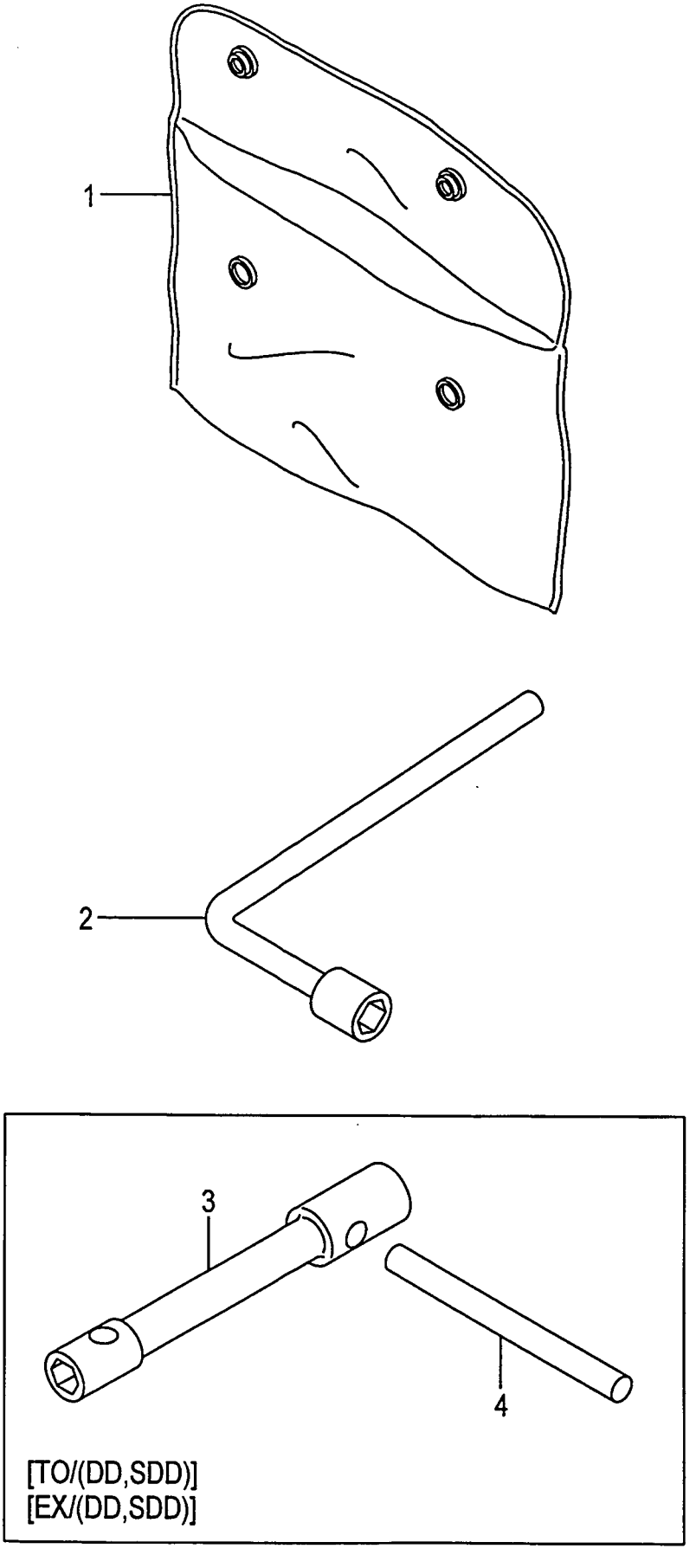

A:FD10C12 FD10T12 FD15C12 FD15T12 FD18C12 FD18T12

Item No	Part No.	Mark	Description	Req'd	Remarks : Serial No.
1	214A9-20101		SACK,SERVICE-TOOLS サック	1	[TO][EX](WITHOUT TOZZZ/EX)
-	214A9-20101		SACK,SERVICE-TOOLS サック	1	[TO/DD][TO/SDD][EX/DD] [EX/SDD]
2	22199-22251		WRENCH,HUB-NUT,21MM レンチ	1	[TO][EX](WITHOUT TOZZZ/EX)
-	22199-22251		WRENCH,HUB-NUT,21MM レンチ	1	[TO/DD][TO/SDD][EX/DD] [EX/SDD]
3	24239-22001		WRENCH,HUB-NUT,21MM レンチ	1	[TO/DD][TO/SDD][EX/DD] [EX/SDD]
4	20319-20041		LEVER,WRENCH,HUB-NUT レバー	1	[TO/DD][TO/SDD][EX/DD] [EX/SDD]

FIG.166 FRONT GLASS [AW071]

(F6019310) フロントガラス

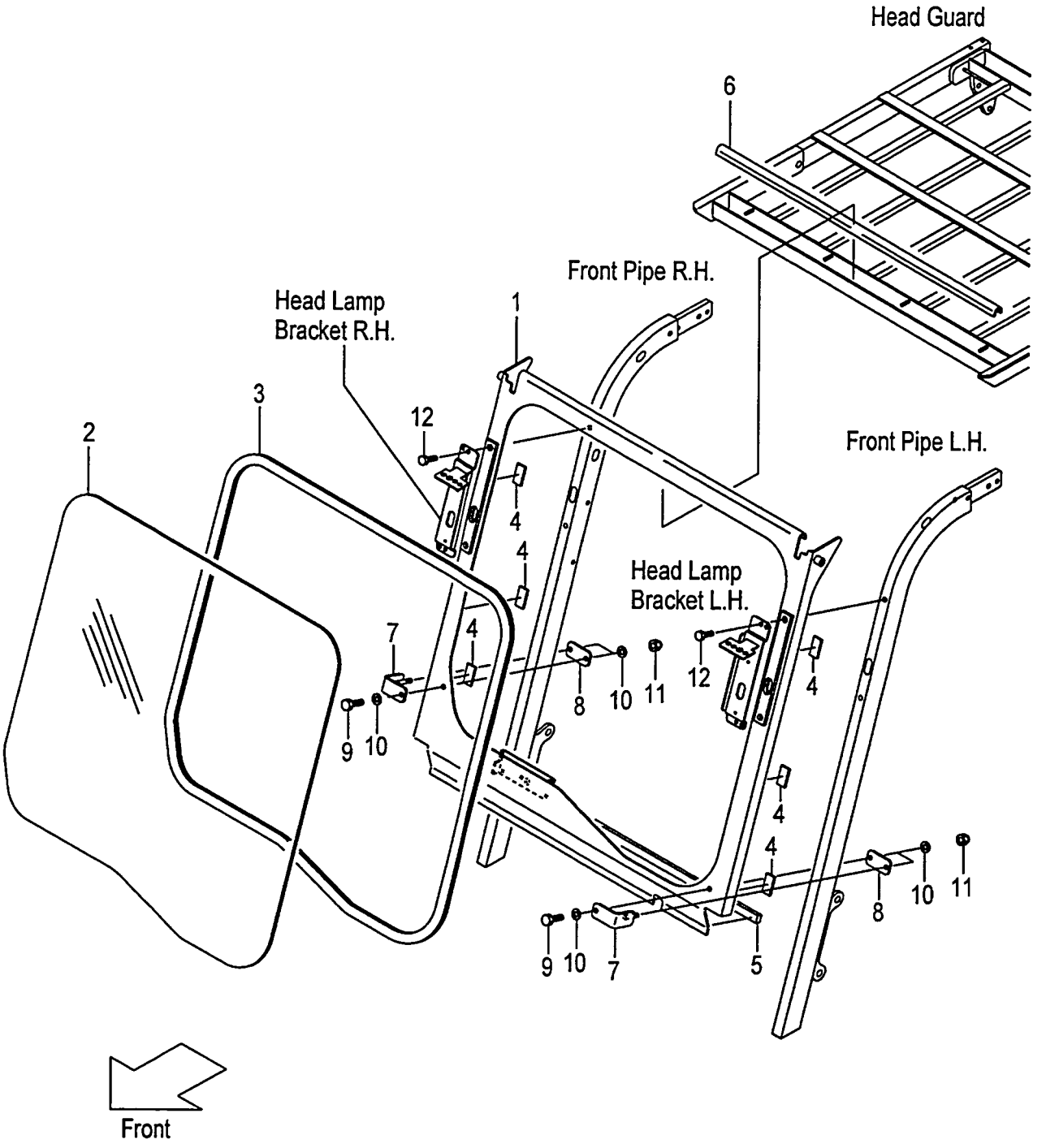

A:FD10C12 FD10T12 FD15C12 FD15T12 FD18C12 FD18T12

Item No	Part No.	Mark	Description		Req'd	Remarks : Serial No.
A1	536A5-40002		GLASS-ASSY,FRONT	ｸﾞﾗｽｱｯｾﾝ	1	[AW071] INC.1-3
-	539A5-40002		GLASS-ASSY,FRONT	ｸﾞﾗｽｱｯｾﾝ	1	[AW071/HGH] INC.1-3
1	536A5-40102		SUPPORT,GLASS	ｻﾎﾟｰﾄ	1	[AW071]
-	539A5-40102		SUPPORT,GLASS	ｻﾎﾟｰﾄ	1	[AW071/HGH]
2	536A5-42052		GLASS	ｸﾞﾗｽ	1	[AW071]
-	539A5-42052		GLASS	ｸﾞﾗｽ	1	[AW071/HGH]
3	514A5-42141		H-RUBBER	Hﾗﾊﾞｰ	1	[AW071]
4	529F5-42061		RUBBER	ﾗﾊﾞｰ	6	[AW071]
5	55535-42161		RUBBER,SEAL	ﾗﾊﾞｰ	1	[AW071]
6	529F5-42041		RUBBER	ﾗﾊﾞｰ	1	[AW071]
7	55535-42101		CLAMP	ｸﾗﾝﾌﾟ	2	[AW071]
8	55535-42141		PLATE	ﾌﾟﾚｰﾄ	2	[AW071]
9	01100-10090		BOLT	ﾎﾞﾙﾄ	2	[AW071]
10	02000-20010		WASHER	ﾜｯｼｬ	6	[AW071]
11	53671-92821		NUT,DOMED-CAP	ﾅｯﾄ	4	[AW071]
12	01183-08040		BOLT	ﾎﾞﾙﾄ	4	[AW071]

FIG.167 FRONT GLASS WIPER [AW071]

(F6019320) フロントガラス

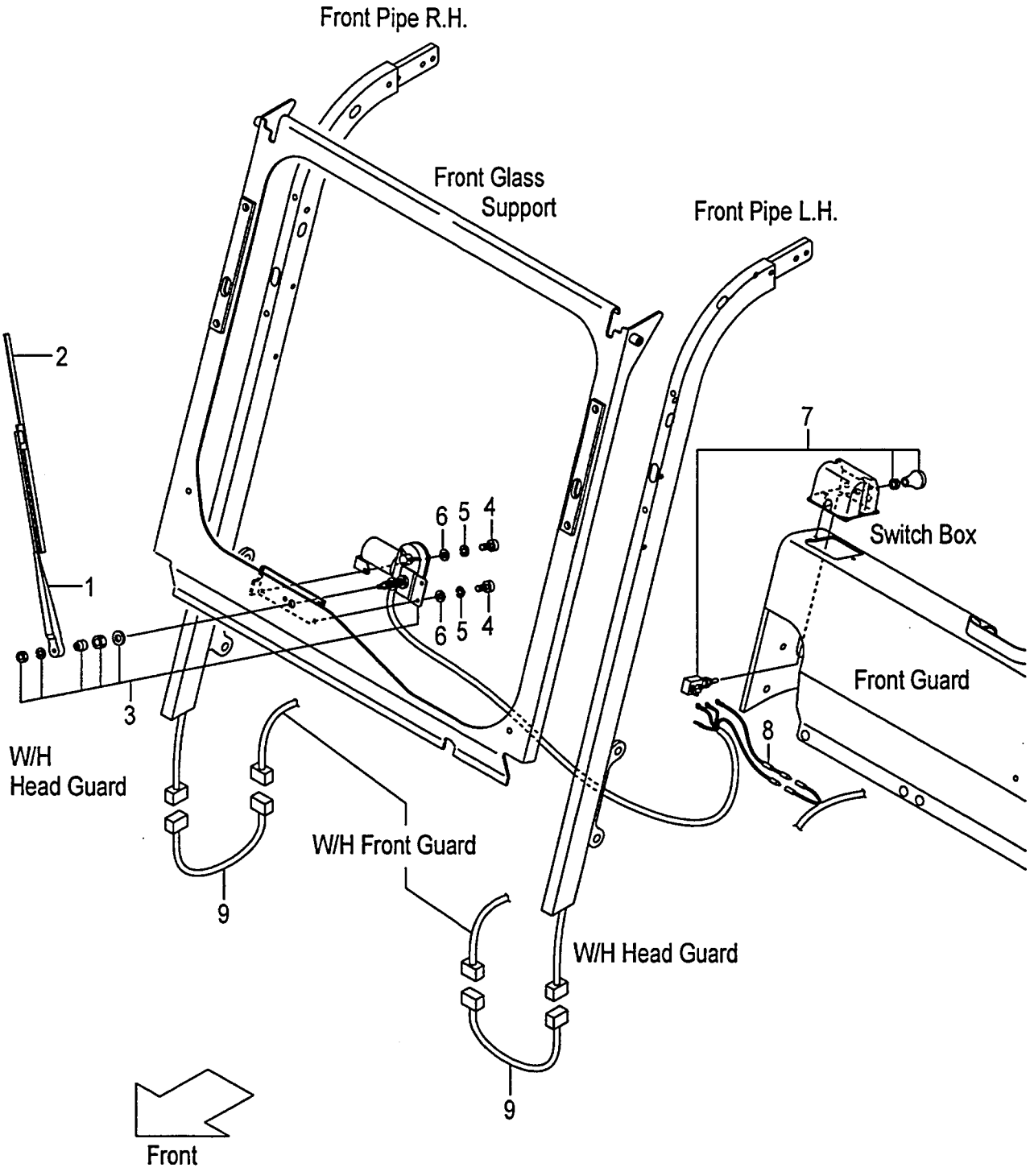

A:FD10C12 FD10T12 FD15C12 FD15T12 FD18C12 FD18T12

Item No	Part No.	Mark	Description		Req'd	Remarks : Serial No.
1	56600-59121		ARM,WIPER	アーム	1	[AW071]
2	514A5-42051		BLADE,WIPER	ﾌﾞﾚｰﾄﾞ	1	[AW071]
3	514A5-42031		MOTOR,WIPER	モータ	1	[AW071]
4	01030-05012		SCREW	ｽｸﾘｭ	3	[AW071]
5	02010-00005		WASHER	ﾜｯｼｬ	3	[AW071]
6	02000-00005		WASHER	ﾜｯｼｬ	3	[AW071]
7	55595-43632		SWITCH,WIPER	ｽｲｯﾁ	1	[AW071]
8	534A5-42201		WIRE,LEAD	ﾜｲﾔ	1	[AW071]
9	229F2-42141		WIRE-HARNESS	ﾜｲﾔﾊｰﾈｽ	2	[AW071]

FIG.168 FIRE EXTINGUISHER [FE][FE M]

(F6019330) ﾌｧｲﾔｲｸｽﾃｨﾝｸﾞｲｯｼｬ

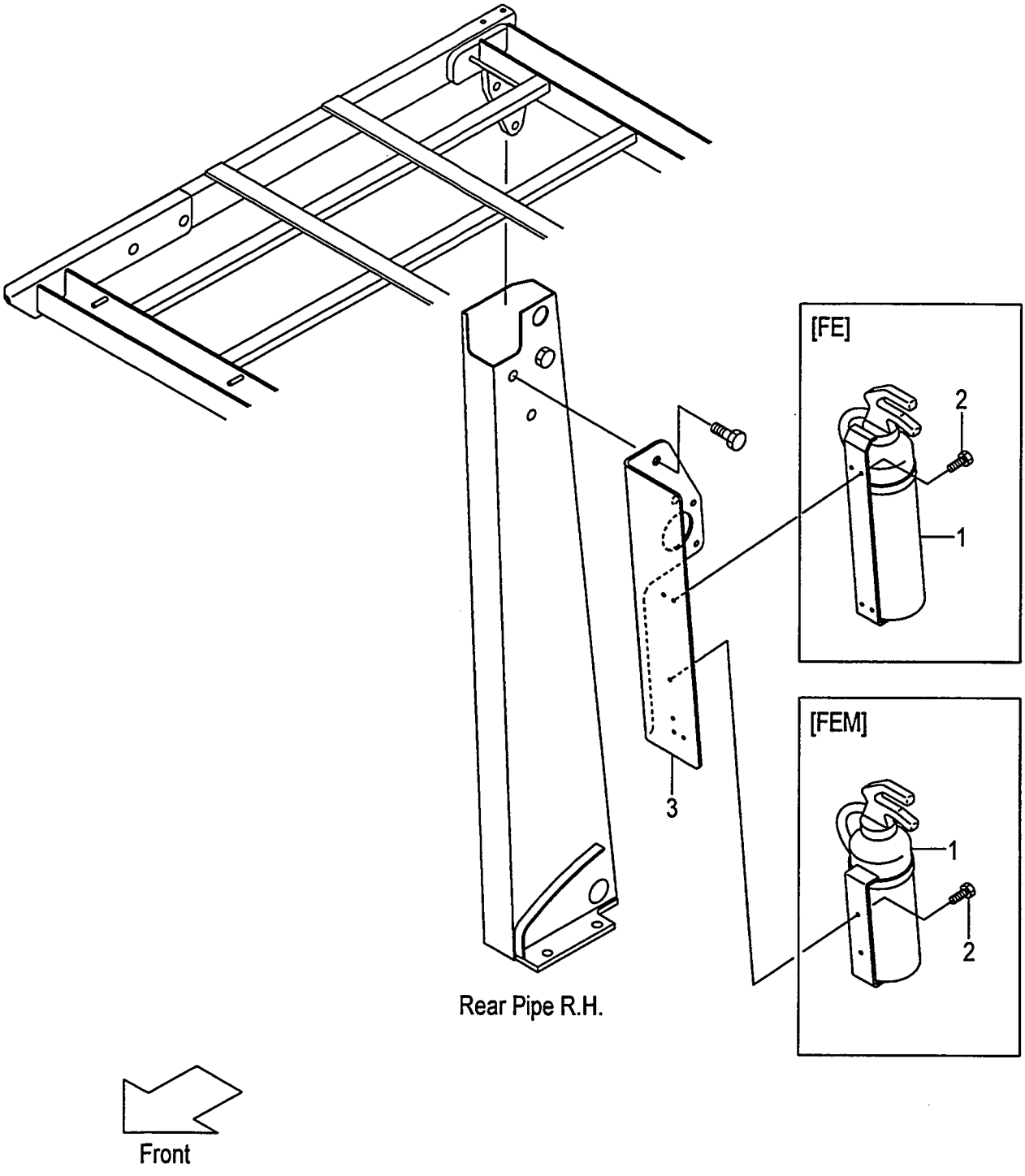

A:FD10C12 FD10T12 FD15C12 FD15T12 FD18C12 FD18T12

Item No	Part No.	Mark	Description		Req'd	Remarks : Serial No.
1	22679-12102		EXTINGUISHER,FIRE	ｲｸｽﾃｨﾝｸﾞｲｯｼｬ	1	[FE]
-	271A9-12191		EXTINGUISHER,FIRE	ｲｸｽﾃｨﾝｸﾞｲｯｼｬ	1	[FE M]
2	01183-05012		BOLT	ﾎﾞﾙﾄ	4	[FE]
-	01183-05012		BOLT	ﾎﾞﾙﾄ	2	[FE M]
3	539A9-62001		BRACKET,EXTINGUISHER	ﾌﾞﾗｹｯﾄ	1	[FE][FE M]

FIG.169 FORK [VM18G]

(M5018110) フォーク

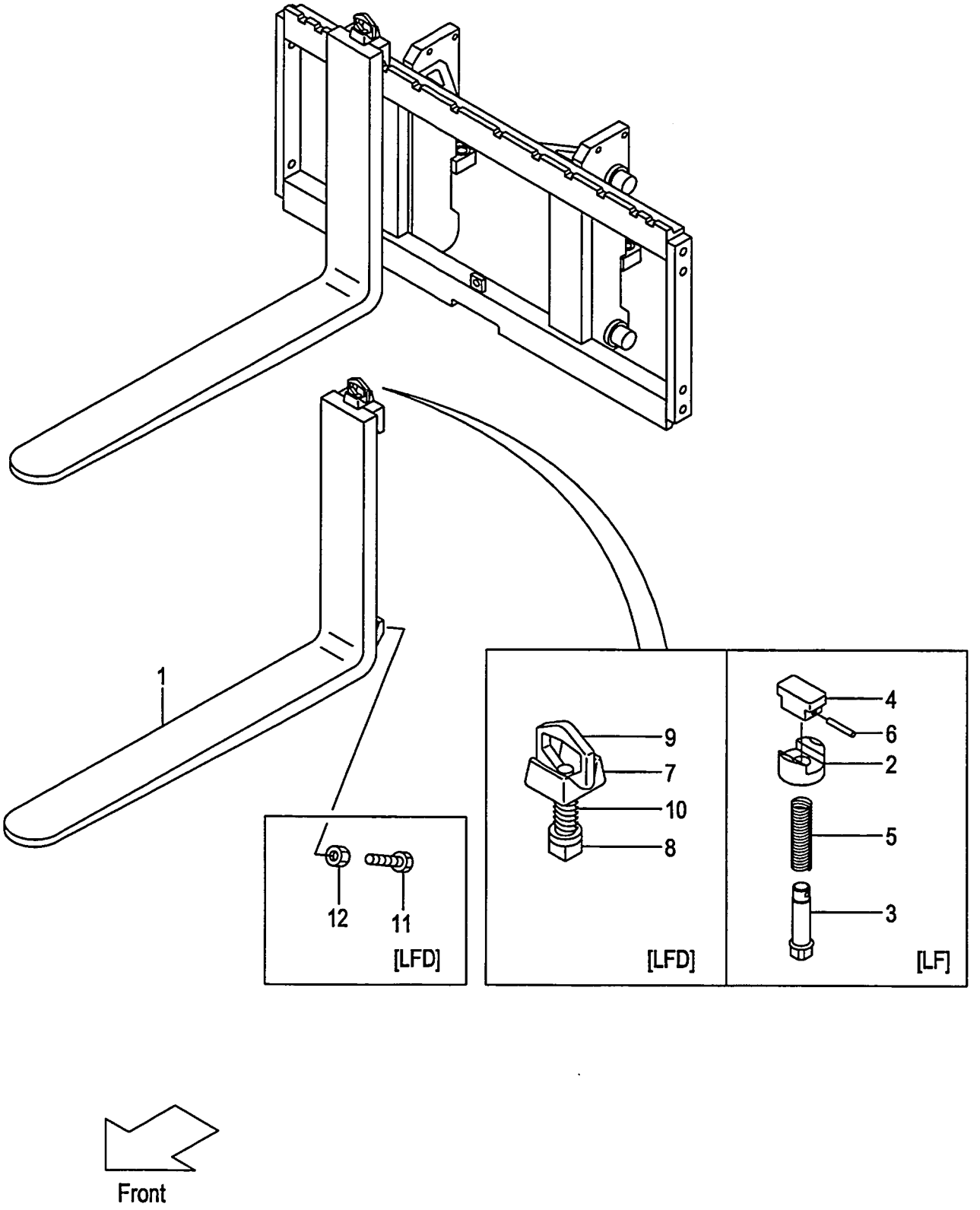

A:VM18G(0.9T)
B:VM18G(1T)
C:VM18G(1.5T)

FIG.169
(M5018110)

Item No	Part No.	Mark	Description		Req'd	Remarks : Serial No.
1	210B8-10502		FORK	ﾌｫｰｸ	2	A,B (L=770) INC.2-6
-	210F8-10512		FORK	ﾌｫｰｸ	2	C (L=920) INC.2-6
-	210B8-10502		FORK	ﾌｫｰｸ	2	A,B [LF077] INC.2-6
-	210B8-10512		FORK	ﾌｫｰｸ	2	A,B [LF085] INC.2-6
-	210F8-10502		FORK	ﾌｫｰｸ	2	C [LF085] INC.2-6
-	210F8-10572		FORK	ﾌｫｰｸ	2	[LF090] INC.2-6
-	210B8-10522		FORK	ﾌｫｰｸ	2	A,B [LF092] INC.2-6
-	210F8-10512		FORK	ﾌｫｰｸ	2	C [LF092] INC.2-6
-	210F8-10512		FORK	ﾌｫｰｸ	2	[EX] INC.2-6
-	210F8-10582		FORK	ﾌｫｰｸ	2	[LF100] INC.2-6
-	210F8-10522		FORK	ﾌｫｰｸ	2	[LF107] INC.2-6
-	210F8-10592		FORK	ﾌｫｰｸ	2	[LF110] INC.2-6
-	210F8-10602		FORK	ﾌｫｰｸ	2	[LF120] INC.2-6
-	210F8-10532		FORK	ﾌｫｰｸ	2	[LF122] INC.2-6
-	210H8-10612		FORK	ﾌｫｰｸ	2	[LF130] INC.2-6
-	210H8-10532		FORK	ﾌｫｰｸ	2	[LF137] INC.2-6
-	210H8-10622		FORK	ﾌｫｰｸ	2	[LF140] INC.2-6
-	210H8-10632		FORK	ﾌｫｰｸ	2	[LF150] INC.2-6
-	210H8-10542		FORK	ﾌｫｰｸ	2	[LF152] INC.2-6
-	210H8-10642		FORK	ﾌｫｰｸ	2	[LF160] INC.2-6
-	210H8-10552		FORK	ﾌｫｰｸ	2	C [LF167] INC.2-6
-	216B8-10301		FORK	ﾌｫｰｸ	2	A,B [LFD077] INC.7-10
-	216B8-10311		FORK	ﾌｫｰｸ	2	A,B [LFD085] INC.7-10
-	216G8-10301		FORK	ﾌｫｰｸ	2	C [LFD085] INC.7-10
-	216G8-10371		FORK	ﾌｫｰｸ	2	[LFD090] INC.7-10
-	216B8-10321		FORK	ﾌｫｰｸ	2	A,B [LFD092] INC.7-10
-	216G8-10311		FORK	ﾌｫｰｸ	2	C [LFD092] INC.7-10
-	216G8-10381		FORK	ﾌｫｰｸ	2	[LFD100] INC.7-10
-	216G8-10321		FORK	ﾌｫｰｸ	2	[LFD107] INC.7-10
-	216G8-10391		FORK	ﾌｫｰｸ	2	[LFD110] INC.7-10
-	216G8-10401		FORK	ﾌｫｰｸ	2	[LFD120] INC.7-10
-	216G8-10331		FORK	ﾌｫｰｸ	2	[LFD122] INC.7-10
-	216G8-10411		FORK	ﾌｫｰｸ	2	[LFD130] INC.7-10
-	216G8-10341		FORK	ﾌｫｰｸ	2	[LFD137] INC.7-10
-	216G8-10421		FORK	ﾌｫｰｸ	2	[LFD140] INC.7-10
-	216G8-10431		FORK	ﾌｫｰｸ	2	[LFD150] INC.7-10
-	216G8-10351		FORK	ﾌｫｰｸ	2	[LFD152] INC.7-10

FIG.169 FORK [VM18G]

(M5018110) フォーク

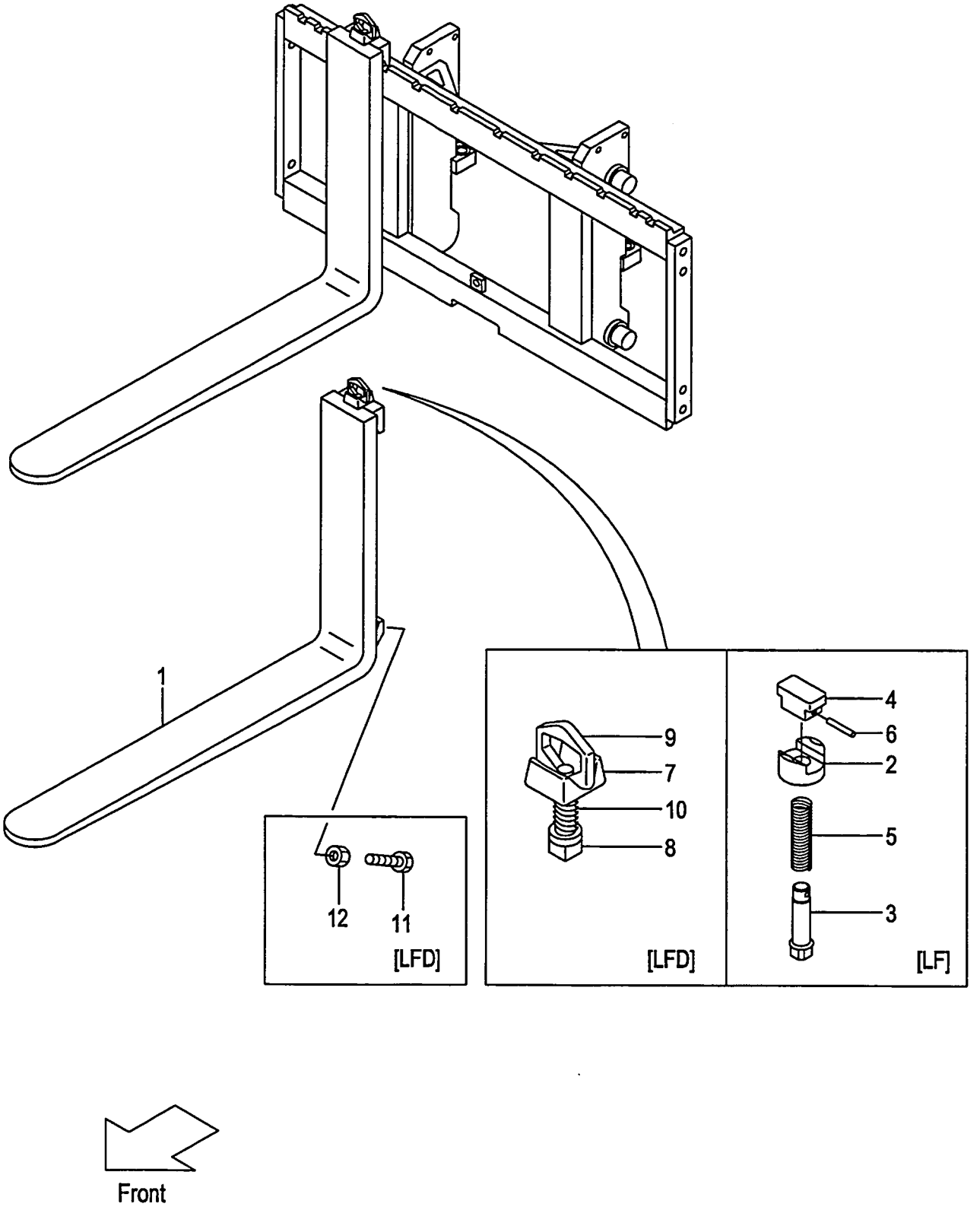

A:VM18G(0.9T)
B:VM18G(1T)
C:VM18G(1.5T)

FIG.169
(M5018110)

Item No	Part No.	Mark	Description		Req'd	Remarks : Serial No.
-	216G8-10441		FORK	ﾌｫｰｸ	2	[LFD160] INC.7-10
-	216G8-10361		FORK	ﾌｫｰｸ	2	C
						[LFD167] INC.7-10
2	216G8-12921		HANDLE	ﾊﾝﾄﾞﾙ	2	[LF]
3	231A8-12001		PIN	ﾋﾟﾝ	2	[LF]
4	231A8-12011		KNOB	ﾉﾌﾞ	2	[LF]
5	231A8-12021		SPRING	ｽﾌﾟﾘﾝｸﾞ	2	[LF]
6	231A8-12031		PIN,SPRING	ﾋﾟﾝ	2	[LF]
A1	214A8-11001		STOPPER-ASSY	ｽﾄｯﾊﾟｱｯｾﾝ	2	[LFD] INC.7-10
7	214A8-12001		HEAD	ﾍｯﾄﾞ	2	[LFD]
8	214A8-12011		STOPPER	ｽﾄｯﾊﾟ	2	[LFD]
9	214A8-12021		HANDLE	ﾊﾝﾄﾞﾙ	2	[LFD]
10	214A8-12031		SPRING	ｽﾌﾟﾘﾝｸﾞ	2	[LFD]
11	216G8-12101		BOLT	ﾎﾞﾙﾄ	4	[LFD]
12	01402-00010		NUT	ﾅｯﾄ	4	[LFD]

FIG.170 LIFT BRACKET [VM18G]

(M5018210) ﾘﾌﾄﾌﾞﾗｹｯﾄ

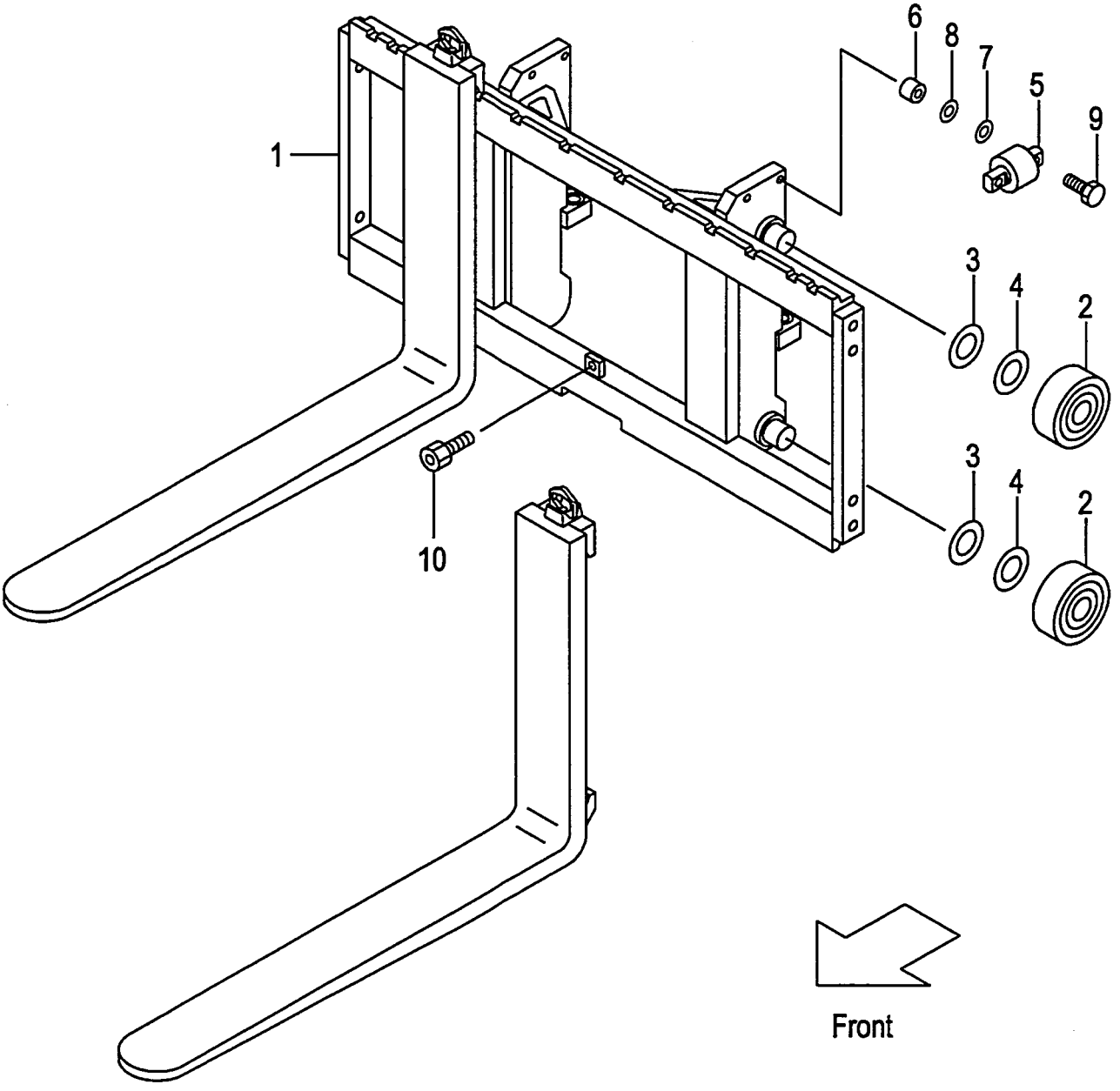

A:VM18G(0.9T)
B:VM18G(1T)
C:VM18G(1.5T)

FIG.170
(M5018210)

Item No	Part No.	Mark	Description		Req'd	Remarks : Serial No.
1	218G8-20001		BRACKET,LIFT	ﾌﾞﾗｹｯﾄ	1	
2	211F8-22201		ROLLER,END,102.0	ﾛｰﾗ	4	
-	211F8-22211		ROLLER,END,102.5	ﾛｰﾗ	(4)	
-	511F3-74021		ROLLER,END,102.0	ﾛｰﾗ	4	B,C [FC][FCS35][FCS55][CS35][CSA] [FCS45]
-	511F3-74031		ROLLER,END,102.5	ﾛｰﾗ	(4)	B,C [FC][FCS35][FCS55][CS35][CSA] [FCS45]
3	211F8-22261		SHIM,T-0.5	ｼﾑ	4	
-	211F8-22261		SHIM,T-0.5	ｼﾑ	4	B,C [FC][FCS35][FCS55][CS35][CSA] [FCS45]
4	211F8-22271		SHIM,T-1.0	ｼﾑ	8	
-	211F8-22271		SHIM,T-1.0	ｼﾑ	8	B,C [FC][FCS35][FCS55][CS35][CSA] [FCS45]
5	22018-30304		ROLLER,SIDE	ﾛｰﾗ	2	
-	510F3-74001		ROLLER,SIDE	ﾛｰﾗ	2	B,C [FC][FCS35][FCS55][CS35][CSA] [FCS45]
6	22578-32841		SPACER	ｽﾍﾟｰｻ	4	
-	22578-32841		SPACER	ｽﾍﾟｰｻ	4	B,C [FC][FCS35][FCS55][CS35][CSA] [FCS45]
7	22018-30261		SHIM	ｼﾑ	8	
-	22018-30261		SHIM	ｼﾑ	8	B,C [FC][FCS35][FCS55][CS35][CSA] [FCS45]
8	22018-30121		SHIM	ｼﾑ	4	
-	22018-30121		SHIM	ｼﾑ	4	B,C [FC][FCS35][FCS55][CS35][CSA] [FCS45]
9	01103-10050		BOLT & WASHER	ﾎﾞﾙﾄ & ﾜｯｼｬ	4	
10	01184-12025		BOLT & WASHER	ﾎﾞﾙﾄ & ﾜｯｼｬ	1	

FIG.171 BACKREST [VM18G]

(M5018220) ﾊﾞｯｸﾚｽﾄ

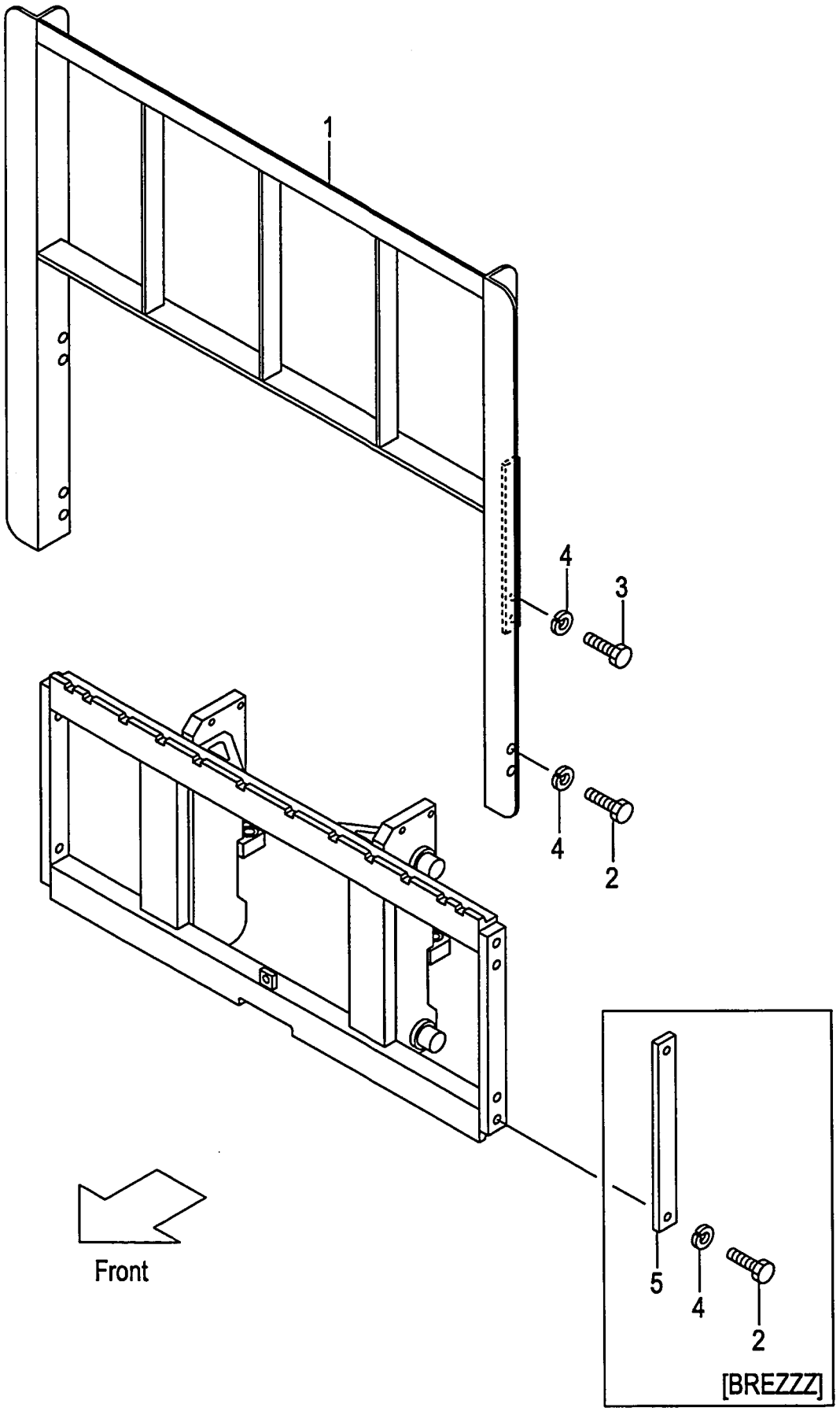

A:VM18G(0.9T)
B:VM18G(1T)
C:VM18G(1.5T)

FIG.171
(M5018220)

Item No	Part No.	Mark	Description		Req'd	Remarks : Serial No.
1	216G8-22201		BACKREST	ﾊﾞｯｸﾚｽﾄ	1	
2	01100-14025		BOLT	ﾎﾞﾙﾄ	4	
-	01100-14025		BOLT	ﾎﾞﾙﾄ	4	[BREZZZ]
3	01100-14030		BOLT	ﾎﾞﾙﾄ	4	
4	02010-00014		WASHER	ﾜｯｼｬ	8	
-	02010-00014		WASHER	ﾜｯｼｬ	4	[BREZZZ]
5	23659-42161		PLATE	ﾌﾟﾚｰﾄ	2	[BREZZZ]

FIG.172 MAST [VM18G]

(M5018310) マスト

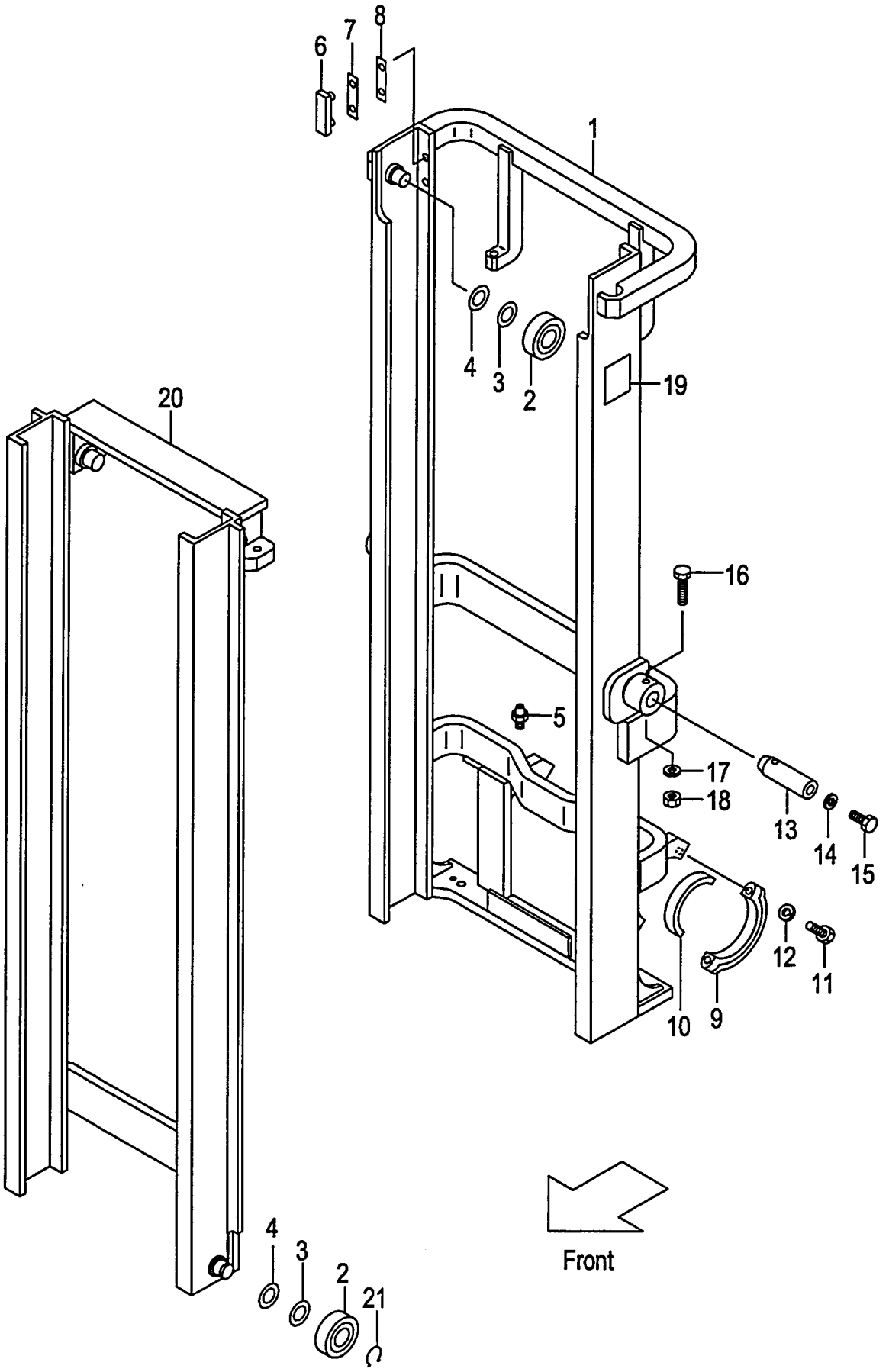

A:VM18G(0.9T)
B:VM18G(1T)
C:VM18G(1.5T)

FIG.172
(M5018310)

Item No	Part No.	Mark	Description		Req'd	Remarks : Serial No.
1	218G8-30211		MAST,OUTER VM200	ｱｳﾀﾏｽﾄ	1	
-	218G8-30221		MAST,OUTER VM225	ｱｳﾀﾏｽﾄ	1	
-	218G8-30231		MAST,OUTER VM250	ｱｳﾀﾏｽﾄ	1	
-	218G8-30241		MAST,OUTER VM270	ｱｳﾀﾏｽﾄ	1	
-	218G8-30251		MAST,OUTER VM275	ｱｳﾀﾏｽﾄ	1	
-	218G8-30201		MAST,OUTER VM300	ｱｳﾀﾏｽﾄ	1	
-	218G8-30261		MAST,OUTER VM325	ｱｳﾀﾏｽﾄ	1	
-	218G8-30271		MAST,OUTER VM330	ｱｳﾀﾏｽﾄ	1	
-	218E8-30281		MAST,OUTER VM350	ｱｳﾀﾏｽﾄ	1	
-	218G8-30291		MAST,OUTER VM366	ｱｳﾀﾏｽﾄ	1	
-	218G8-30301		MAST,OUTER VM370	ｱｳﾀﾏｽﾄ	1	
-	218G8-30311		MAST,OUTER VM375	ｱｳﾀﾏｽﾄ	1	
-	218G8-30321		MAST,OUTER VM400	ｱｳﾀﾏｽﾄ	1	
-	218G8-30331		MAST,OUTER VM425	ｱｳﾀﾏｽﾄ	1	
-	218G8-30341		MAST,OUTER VM450	ｱｳﾀﾏｽﾄ	1	
-	218G8-30351		MAST,OUTER VM475	ｱｳﾀﾏｽﾄ	1	
-	218G8-30361		MAST,OUTER VM500	ｱｳﾀﾏｽﾄ	1	
-	218G8-30371		MAST,OUTER VM550	ｱｳﾀﾏｽﾄ	1	
-	218G8-30381		MAST,OUTER VM600	ｱｳﾀﾏｽﾄ	1	
2	211F8-22221		ROLLER,END,102.0	ﾛｰﾗ	2	
-	211F8-22231		ROLLER,END,102.5	ﾛｰﾗ	(2)	
-	511F3-74021		ROLLER,END,102.0	ﾛｰﾗ	2	B,C [FC][FCS35][FCS55][CS35][CSA] [FCS45]
-	511F3-74031		ROLLER,END,102.5	ﾛｰﾗ	(2)	B,C [FC][FCS35][FCS55][CS35][CSA] [FCS45]
3	211F8-22261		SHIM,T-0.5	ｼﾑ	4	B,C [FC][FCS35][FCS55][CS35][CSA] [FCS45]
-	211F8-22261		SHIM,T-0.5	ｼﾑ	8	
-	211F8-22261		SHIM,T-0.5	ｼﾑ	4	B,C [FCS35][FCS55][CS35][FCS45]
4	211F8-22271		SHIM,T-1.0	ｼﾑ	8	B,C [FC][FCS35][FCS55][CS35][CSA] [FCS45]
-	211F8-22271		SHIM,T-1.0	ｼﾑ	16	
-	211F8-22271		SHIM,T-1.0	ｼﾑ	8	B,C [FCS35][FCS55][CS35][FCS45]
5	04901-00100		FITTING	ﾌｨｯﾃｨﾝｸﾞ	2	
6	216G8-33401		SLIPPER	ｽﾘｯﾊﾟ	2	
7	216G8-33361		SHIM,T-0.5	ｼﾑ	8	
8	216G8-33371		SHIM,T-1.0	ｼﾑ	4	
9	210F6-12441		CAP	ｷｬｯﾌﾟ	2	
10	216G8-02001		BUSHING	ﾌﾞｯｼﾝｸﾞ	2	
11	01100-14065		BOLT	ﾎﾞﾙﾄ	4	
12	02010-00014		WASHER	ﾜｯｼｬ	4	
13	210F8-02102		PIN	ﾋﾟﾝ	2	
14	216G8-52311		WASHER	ﾜｯｼｬ	2	
15	216G4-12251		BOLT	ﾎﾞﾙﾄ	2	

FIG.172 MAST [VM18G]

(M5018310) マスト

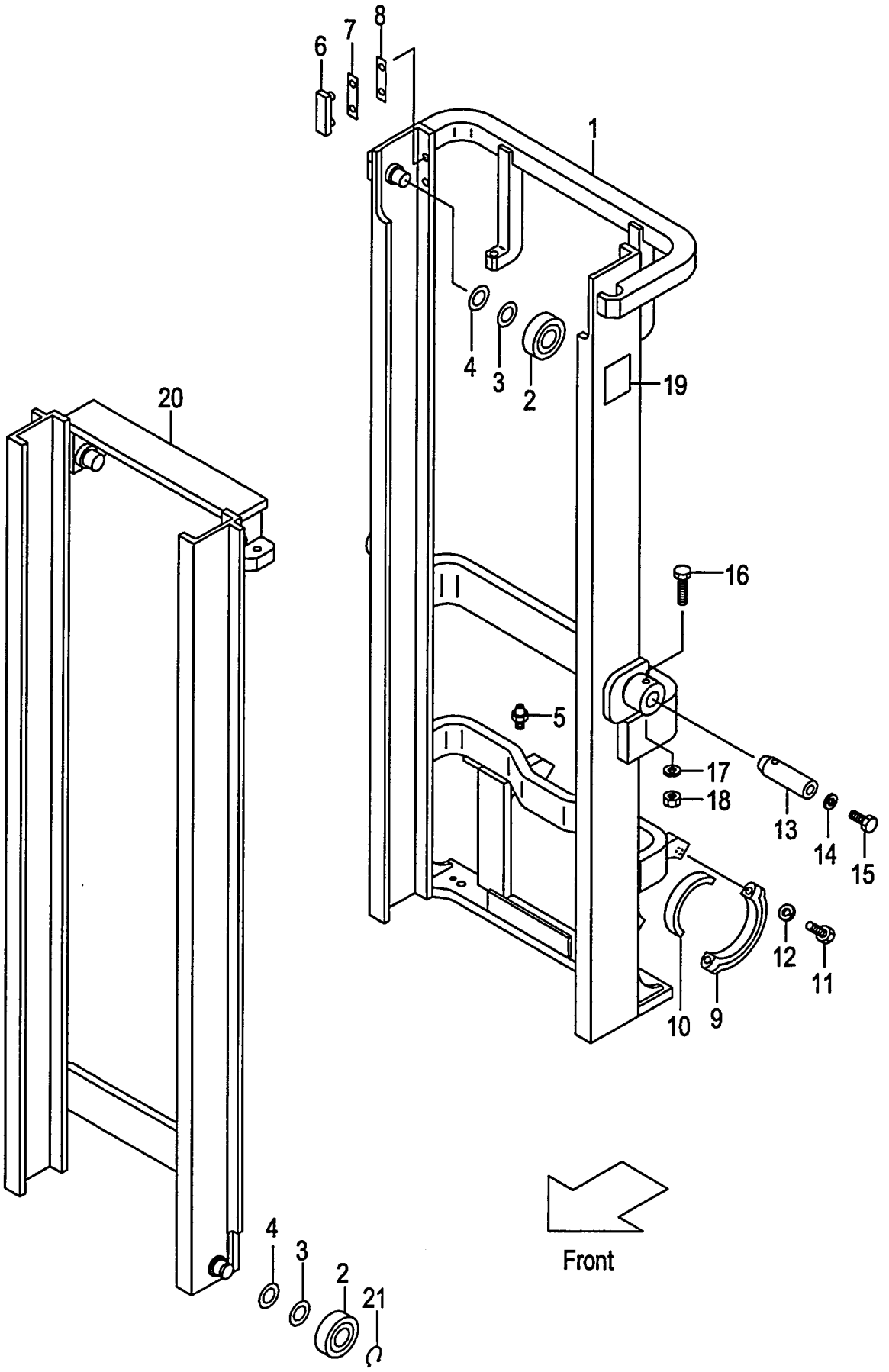

A:VM18G(0.9T)
B:VM18G(1T)
C:VM18G(1.5T)

FIG.172
(M5018310)

Item No	Part No.	Mark	Description		Req'd	Remarks : Serial No.
16	216G8-52321		BOLT	ﾎﾞﾙﾄ	2	
17	02010-20012		WASHER	ﾜｯｼｬ	2	
18	234A8-42571		NUT	ﾅｯﾄ	2	
19	23678-06002		PLATE,NAME	ﾌﾟﾚｰﾄ	1	
20	218G8-30411		MAST,INNER VM200	ｲﾝﾅﾏｽﾄ	1	
-	218G8-30421		MAST,INNER VM225	ｲﾝﾅﾏｽﾄ	1	
-	218G8-30431		MAST,INNER VM250	ｲﾝﾅﾏｽﾄ	1	
-	218G8-30441		MAST,INNER VM270	ｲﾝﾅﾏｽﾄ	1	
-	218G8-30451		MAST,INNER VM275	ｲﾝﾅﾏｽﾄ	1	
-	218G8-30401		MAST,INNER VM300	ｲﾝﾅﾏｽﾄ	1	
-	218G8-30461		MAST,INNER VM325	ｲﾝﾅﾏｽﾄ	1	
-	218G8-30471		MAST,INNER VM330	ｲﾝﾅﾏｽﾄ	1	
-	218G8-30481		MAST,INNER VM350	ｲﾝﾅﾏｽﾄ	1	
-	218G8-30491		MAST,INNER VM366	ｲﾝﾅﾏｽﾄ	1	
-	218G8-30501		MAST,INNER VM370	ｲﾝﾅﾏｽﾄ	1	
-	218G8-30511		MAST,INNER VM375	ｲﾝﾅﾏｽﾄ	1	
-	218G8-30521		MAST,INNER VM400	ｲﾝﾅﾏｽﾄ	1	
-	218G8-30531		MAST,INNER VM425	ｲﾝﾅﾏｽﾄ	1	
-	218G8-30541		MAST,INNER VM450	ｲﾝﾅﾏｽﾄ	1	
-	218G8-30551		MAST,INNER VM475	ｲﾝﾅﾏｽﾄ	1	
-	218G8-30561		MAST,INNER VM500	ｲﾝﾅﾏｽﾄ	1	
-	218G8-30571		MAST,INNER VM550	ｲﾝﾅﾏｽﾄ	1	
-	218G8-30581		MAST,INNER VM600	ｲﾝﾅﾏｽﾄ	1	
21	09192-30035		RING,SNAP	ｽﾅｯﾌﾟﾘﾝｸﾞ	2	
-	09192-30035		RING,SNAP	ｽﾅｯﾌﾟﾘﾝｸﾞ	2	B,C [FC][FCS35][FCS55][CS35][CSA] [FCS45]

FIG.173 LIFT CYLINDER [VM18G]

(M5018410) リフトシリンダ

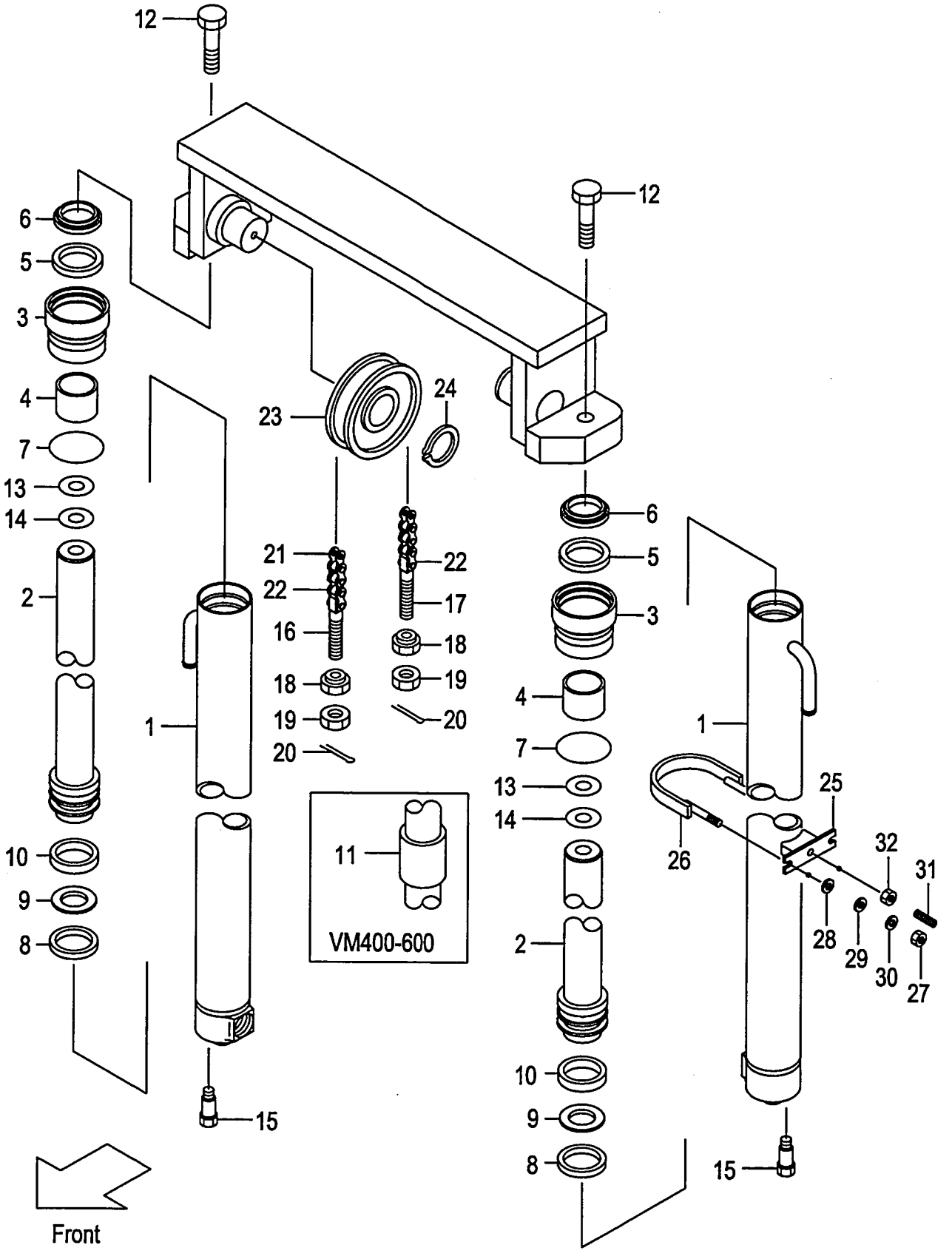

A:VM18G(0.9T)
B:VM18G(1T)
C:VM18G(1.5T)

FIG.173
(M5018410)

Item No	Part No.	Mark	Description		Req'd	Remarks : Serial No.
A1	218G8-40011		CYL-ASSY,LIFT VM200	ｼﾘﾝﾀﾞｱｯｾﾝ	2	INC.1-11
-	218G8-40021		CYL-ASSY,LIFT VM225	ｼﾘﾝﾀﾞｱｯｾﾝ	2	INC.1-11
-	218G8-40031		CYL-ASSY,LIFT VM250	ｼﾘﾝﾀﾞｱｯｾﾝ	2	INC.1-11
-	218G8-40041		CYL-ASSY,LIFT VM270	ｼﾘﾝﾀﾞｱｯｾﾝ	2	INC.1-11
-	218G8-40051		CYL-ASSY,LIFT VM275	ｼﾘﾝﾀﾞｱｯｾﾝ	2	INC.1-11
-	218G8-40001		CYL-ASSY,LIFT VM300	ｼﾘﾝﾀﾞｱｯｾﾝ	2	INC.1-11
-	218G8-40061		CYL-ASSY,LIFT VM325	ｼﾘﾝﾀﾞｱｯｾﾝ	2	INC.1-11
-	218G8-40071		CYL-ASSY,LIFT VM330	ｼﾘﾝﾀﾞｱｯｾﾝ	2	INC.1-11
-	218G8-40081		CYL-ASSY,LIFT VM350	ｼﾘﾝﾀﾞｱｯｾﾝ	2	INC.1-11
-	218G8-40091		CYL-ASSY,LIFT VM366	ｼﾘﾝﾀﾞｱｯｾﾝ	2	INC.1-11
-	218G8-40101		CYL-ASSY,LIFT VM370	ｼﾘﾝﾀﾞｱｯｾﾝ	2	INC.1-11
-	218G8-40111		CYL-ASSY,LIFT VM375	ｼﾘﾝﾀﾞｱｯｾﾝ	2	INC.1-11
-	218G8-40121		CYL-ASSY,LIFT VM400	ｼﾘﾝﾀﾞｱｯｾﾝ	2	INC.1-11
-	218G8-40131		CYL-ASSY,LIFT VM425	ｼﾘﾝﾀﾞｱｯｾﾝ	2	INC.1-11
-	218G8-40141		CYL-ASSY,LIFT VM450	ｼﾘﾝﾀﾞｱｯｾﾝ	2	INC.1-11
-	218G8-40151		CYL-ASSY,LIFT VM475	ｼﾘﾝﾀﾞｱｯｾﾝ	2	INC.1-11
-	218G8-40161		CYL-ASSY,LIFT VM500	ｼﾘﾝﾀﾞｱｯｾﾝ	2	INC.1-11
-	218G8-40171		CYL-ASSY,LIFT VM550	ｼﾘﾝﾀﾞｱｯｾﾝ	2	INC.1-11
-	218G8-40181		CYL-ASSY,LIFT VM600	ｼﾘﾝﾀﾞｱｯｾﾝ	2	INC.1-11
1	B-30697-49101		BODY,CYL VM200	ﾎﾞﾃﾞｨ	2	
-	B-30697-49201		BODY,CYL VM225	ﾎﾞﾃﾞｨ	2	
-	B-30697-49301		BODY,CYL VM250	ﾎﾞﾃﾞｨ	2	
-	B-30697-49401		BODY,CYL VM270	ﾎﾞﾃﾞｨ	2	
-	B-30697-49501		BODY,CYL VM275	ﾎﾞﾃﾞｨ	2	
-	B-30697-49601		BODY,CYL VM300	ﾎﾞﾃﾞｨ	2	
-	B-30697-49701		BODY,CYL VM325	ﾎﾞﾃﾞｨ	2	
-	B-30697-49801		BODY,CYL VM330	ﾎﾞﾃﾞｨ	2	
-	B-30697-49901		BODY,CYL VM350	ﾎﾞﾃﾞｨ	2	
-	B-30697-50001		BODY,CYL VM366	ﾎﾞﾃﾞｨ	2	
-	B-30697-50101		BODY,CYL VM370	ﾎﾞﾃﾞｨ	2	
-	B-30697-50201		BODY,CYL VM375	ﾎﾞﾃﾞｨ	2	
-	B-30697-50301		BODY,CYL VM400	ﾎﾞﾃﾞｨ	2	
-	B-30697-50401		BODY,CYL VM425	ﾎﾞﾃﾞｨ	2	
-	B-30697-50501		BODY,CYL VM450	ﾎﾞﾃﾞｨ	2	
-	B-30697-50601		BODY,CYL VM475	ﾎﾞﾃﾞｨ	2	
-	B-30697-50701		BODY,CYL VM500	ﾎﾞﾃﾞｨ	2	
-	B-30697-50801		BODY,CYL VM550	ﾎﾞﾃﾞｨ	2	
-	B-30697-50901		BODY,CYL VM600	ﾎﾞﾃﾞｨ	2	
2	B-B6527-62102		ROD,PISTON VM200	ﾛｯﾄﾞ	2	
-	B-B6537-88202		ROD,PISTON VM225	ﾛｯﾄﾞ	2	
-	B-B6527-62302		ROD,PISTON VM250	ﾛｯﾄﾞ	2	
-	B-B6527-62402		ROD,PISTON VM270	ﾛｯﾄﾞ	2	
-	B-B6537-88502		ROD,PISTON VM275	ﾛｯﾄﾞ	2	
-	B-B6527-62502		ROD,PISTON VM300	ﾛｯﾄﾞ	2	
-	B-B6537-88702		ROD,PISTON VM325	ﾛｯﾄﾞ	2	
-	B-B6527-62602		ROD,PISTON VM330	ﾛｯﾄﾞ	2	
-	B-B6527-62702		ROD,PISTON VM350	ﾛｯﾄﾞ	2	
-	B-B6537-89002		ROD,PISTON VM366	ﾛｯﾄﾞ	2	
-	B-B6527-62802		ROD,PISTON VM370	ﾛｯﾄﾞ	2	
-	B-B6537-89202		ROD,PISTON VM375	ﾛｯﾄﾞ	2	

FIG.173 LIFT CYLINDER [VM18G]

(M5018410) リフトシリンダ

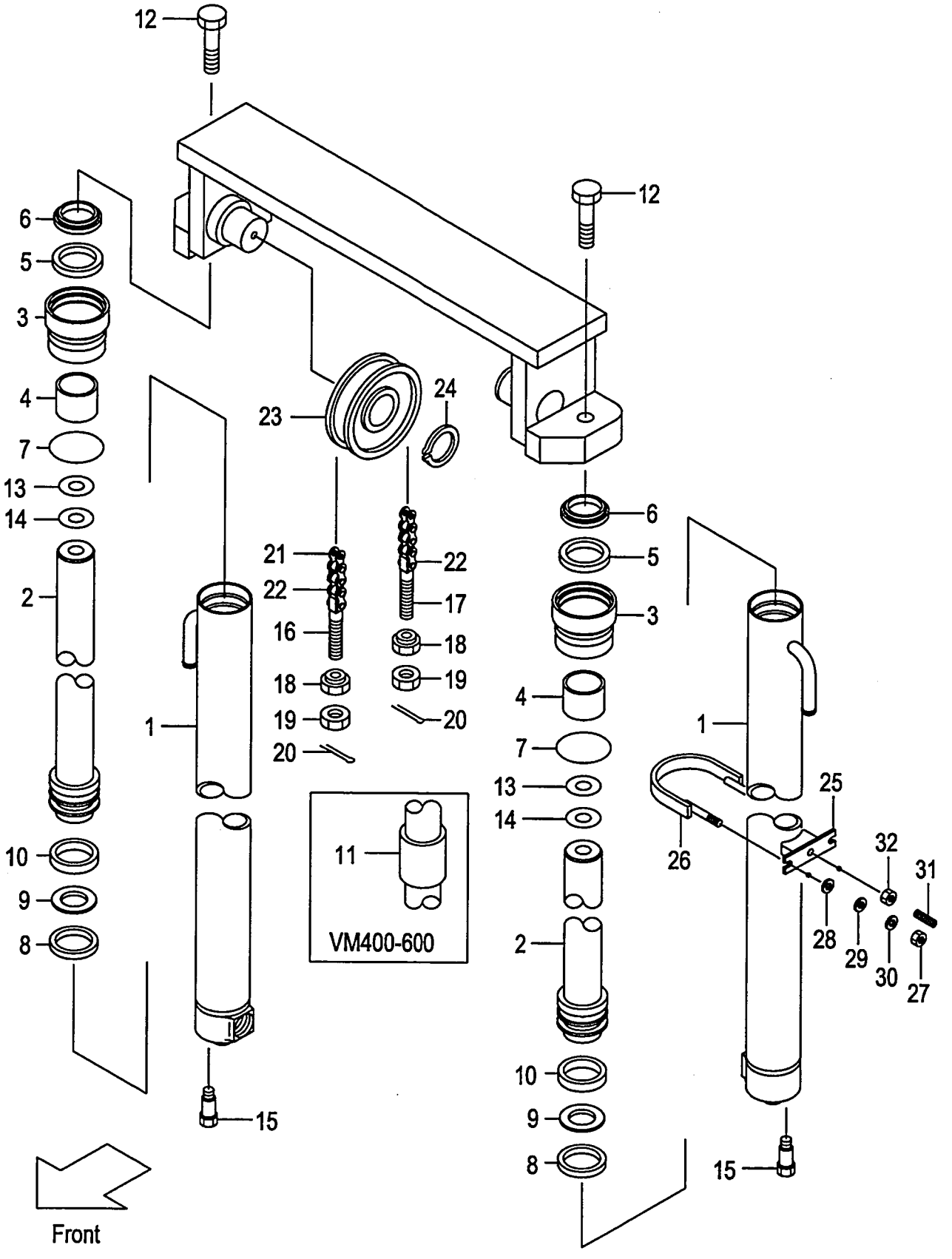

A:VM18G(0.9T)
B:VM18G(1T)
C:VM18G(1.5T)

FIG.173
(M5018410)

Item No	Part No.	Mark	Description		Req'd	Remarks : Serial No.
-	B-B6527-64802		ROD,PISTON VM400	ﾛｯﾄﾞ	2	
-	B-B6537-89402		ROD,PISTON VM425	ﾛｯﾄﾞ	2	
-	B-B6527-65002		ROD,PISTON VM450	ﾛｯﾄﾞ	2	
-	B-B6537-89602		ROD,PISTON VM475	ﾛｯﾄﾞ	2	
-	B-B6527-65302		ROD,PISTON VM500	ﾛｯﾄﾞ	2	
-	B-B6527-63502		ROD,PISTON VM550	ﾛｯﾄﾞ	2	
-	B-B6537-89902		ROD,PISTON VM600	ﾛｯﾄﾞ	2	
3	B-30121-45018	*	CAP	ｷｬｯﾌﾟ	2	
4	B-30131-35017	*	BUSHING	ﾌﾞｯｼﾝｸﾞ	2	
5	B-30961-03512	*	U-RING	Uﾘﾝｸﾞ	2	
6	B-30191-35025	*	RING,WIPER	ﾘﾝｸﾞ	2	
7	B-30161-91773	*	O-RING	Oﾘﾝｸﾞ	2	
8	B-30161-45046	*	U-RING	Uﾘﾝｸﾞ	2	
9	B-30461-45039	*	RING	ﾘﾝｸﾞ	2	
10	B-30131-45018		BUSHING	ﾌﾞｯｼﾝｸﾞ	2	
11	B-30111-35012		SPACER VM400	ｽﾍﾟｰｻ	2	
-	B-30111-35012		SPACER VM425	ｽﾍﾟｰｻ	2	
-	B-30111-35012		SPACER VM450	ｽﾍﾟｰｻ	2	
-	B-30111-35012		SPACER VM475	ｽﾍﾟｰｻ	2	
-	B-30111-35012		SPACER VM500	ｽﾍﾟｰｻ	2	
-	B-30111-35008		SPACER VM550	ｽﾍﾟｰｻ	2	
-	B-30111-35008		SPACER VM600	ｽﾍﾟｰｻ	2	
12	01103-12035		BOLT	ﾎﾞﾙﾄ	2	
13	22717-40081		SHIM	ｼﾑ	4	
14	22517-40051		SHIM	ｼﾑ	4	
15	216G8-43151		BOLT	ﾎﾞﾙﾄ	2	
16	218G8-42501		PIN,ANCHOR	ﾋﾟﾝ	2	
-	510F5-54051		PIN,ANCHOR	ﾋﾟﾝ	2	B,C [FC][FCS35][FCS45][FCS55]
17	218G8-42511		PIN,ANCHOR	ﾋﾟﾝ	2	
-	510F5-54061		PIN,ANCHOR	ﾋﾟﾝ	2	B,C [FC][FCS35][FCS45][FCS55]
18	22118-40181		NUT	ﾅｯﾄ	4	
-	22118-40181		NUT	ﾅｯﾄ	4	B,C [FC][FCS35][FCS45][FCS55]
19	01400-00014		NUT	ﾅｯﾄ	4	
-	01400-00014		NUT	ﾅｯﾄ	4	B,C [FC][FCS35][FCS45][FCS55]
20	02200-03030		PIN	ﾋﾟﾝ	4	
-	02200-03030		PIN	ﾋﾟﾝ	4	B,C [FC][FCS35][FCS45][FCS55]
21	218G8-45791		CHAIN VM200	ﾁｪｰﾝ	2	
-	218G8-45871		CHAIN VM225	ﾁｪｰﾝ	2	
-	218G8-45951		CHAIN VM250	ﾁｪｰﾝ	2	
-	218G8-46011		CHAIN VM270	ﾁｪｰﾝ	2	
-	218G8-46031		CHAIN VM275	ﾁｪｰﾝ	2	
-	218G8-46111		CHAIN VM300	ﾁｪｰﾝ	2	
-	218G8-46191		CHAIN VM325	ﾁｪｰﾝ	2	
-	218G8-46211		CHAIN VM330	ﾁｪｰﾝ	2	
-	218G8-46271		CHAIN VM350	ﾁｪｰﾝ	2	

FIG.173 LIFT CYLINDER [VM18G]

(M5018410) リフトシリンダ

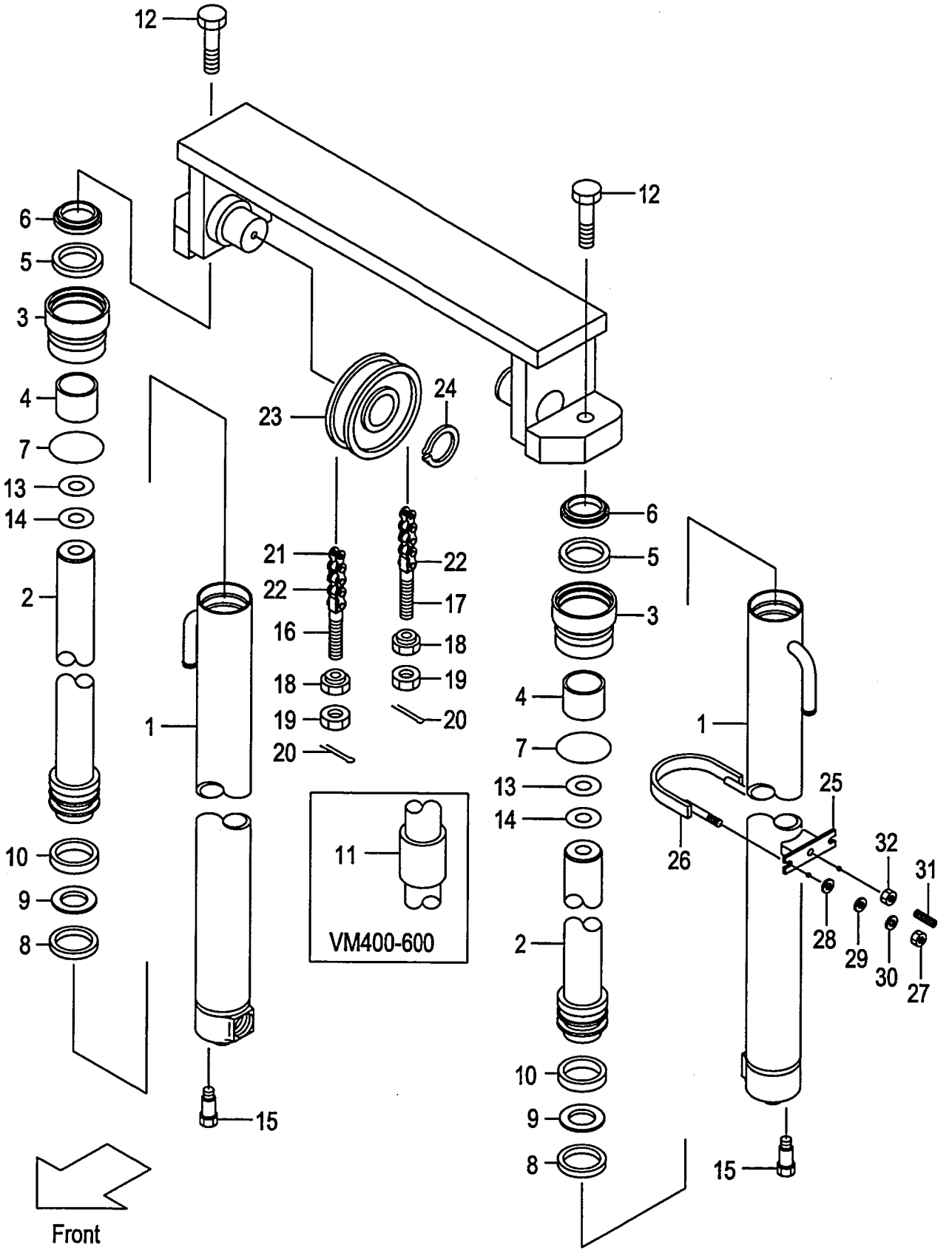

A:VM18G(0.9T)
B:VM18G(1T)
C:VM18G(1.5T)

FIG.173
(M5018410)

Item No	Part No.	Mark	Description		Req'd	Remarks : Serial No.
-	218G8-46311		CHAIN VM366	ﾁｪｰﾝ	2	
-	218G8-46331		CHAIN VM370	ﾁｪｰﾝ	2	
-	218G8-46351		CHAIN VM375	ﾁｪｰﾝ	2	
-	218G8-46451		CHAIN VM400	ﾁｪｰﾝ	2	
-	218G8-46531		CHAIN VM425	ﾁｪｰﾝ	2	
-	218G8-46611		CHAIN VM450	ﾁｪｰﾝ	2	
-	218G8-46691		CHAIN VM475	ﾁｪｰﾝ	2	
-	218G8-46771		CHAIN VM500	ﾁｪｰﾝ	2	
-	218G8-46971		CHAIN VM550	ﾁｪｰﾝ	2	
-	218G8-47111		CHAIN VM600	ﾁｪｰﾝ	2	
-	09001-08051		CHAIN VM200	ﾁｪｰﾝ	2	B,C [FC][FCS35][FCS45][FCS55]
-	09001-08055		CHAIN VM225	ﾁｪｰﾝ	2	B,C [FC][FCS35][FCS45][FCS55]
-	09001-08061		CHAIN VM250	ﾁｪｰﾝ	2	B,C [FC][FCS35][FCS45][FCS55]
-	09001-08065		CHAIN VM270	ﾁｪｰﾝ	2	B,C [FC][FCS35][FCS45][FCS55]
-	09001-08065		CHAIN VM275	ﾁｪｰﾝ	2	B,C [FC][FCS35][FCS45][FCS55]
-	09001-08071		CHAIN VM300	ﾁｪｰﾝ	2	B,C [FC][FCS35][FCS45][FCS55]
-	09001-08075		CHAIN VM325	ﾁｪｰﾝ	2	B,C [FC][FCS35][FCS45][FCS55]
-	09001-08077		CHAIN VM330	ﾁｪｰﾝ	2	B,C [FC][FCS35][FCS45][FCS55]
-	09001-08081		CHAIN VM350	ﾁｪｰﾝ	2	B,C [FC][FCS35][FCS45][FCS55]
-	09001-08083		CHAIN VM366	ﾁｪｰﾝ	2	B,C [FC][FCS35][FCS45][FCS55]
-	09001-08085		CHAIN VM370	ﾁｪｰﾝ	2	B,C [FC][FCS35][FCS45][FCS55]
-	09001-08085		CHAIN VM375	ﾁｪｰﾝ	2	B,C [FC][FCS35][FCS45][FCS55]
-	09001-08093		CHAIN VM400	ﾁｪｰﾝ	2	B,C [FC][FCS35][FCS45][FCS55]
-	09001-08097		CHAIN VM425	ﾁｪｰﾝ	2	B,C [FC][FCS35][FCS45][FCS55]
-	09001-08103		CHAIN VM450	ﾁｪｰﾝ	2	B,C [FC][FCS35][FCS45][FCS55]
-	09001-08107		CHAIN VM475	ﾁｪｰﾝ	2	B,C [FC][FCS35][FCS45][FCS55]
-	09001-08113		CHAIN VM500	ﾁｪｰﾝ	2	B,C [FC][FCS35][FCS45][FCS55]
-	09001-08123		CHAIN VM550	ﾁｪｰﾝ	2	B,C [FC][FCS35][FCS45][FCS55]
-	09001-08133		CHAIN VM600	ﾁｪｰﾝ	2	B,C [FC][FCS35][FCS45][FCS55]
22	218G8-42701		LINK	ﾘﾝｸ	2	
23	216G8-42031		SHEAVE	ｼｰﾌﾞ	2	

FIG.173 LIFT CYLINDER [VM18G]

(M5018410) リフトシリンダ

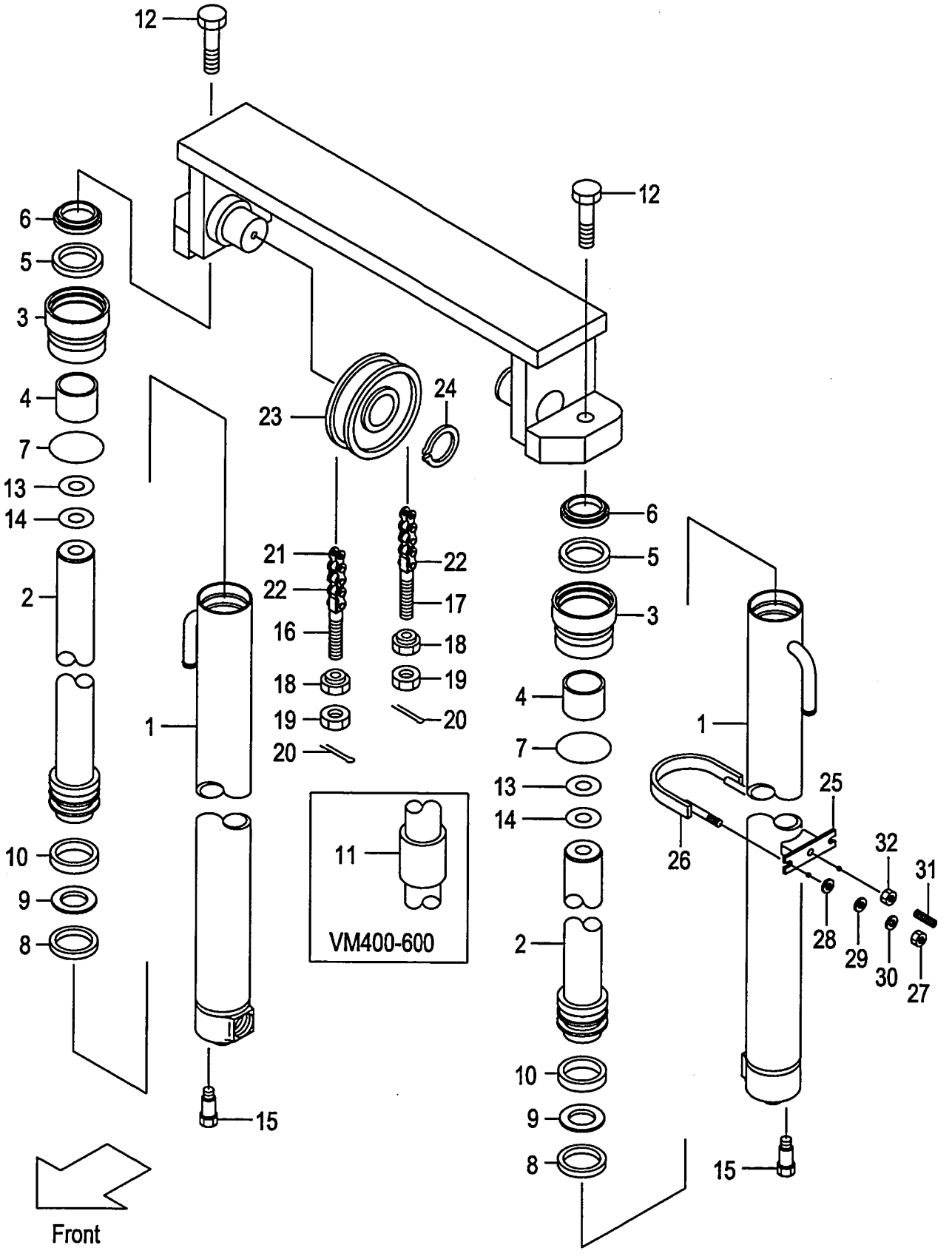

A:VM18G(0.9T)
B:VM18G(1T)
C:VM18G(1.5T)

FIG.173
(M5018410)

Item No	Part No.	Mark	Description		Req'd	Remarks : Serial No.
-	516G3-74001		SHEAVE	ｼｰﾌﾞ	2	B,C [FC][FCS35][FCS45][FCS55]
24	02100-00035		RING,SNAP	ｽﾅｯﾌﾟﾘﾝｸﾞ	2	
-	02100-00035		RING,SNAP	ｽﾅｯﾌﾟﾘﾝｸﾞ	2	B,C [FC][FCS35][FCS45][FCS55]
25	280B8-42031		SUPPORT	ｻﾎﾟｰﾄ	2	
26	280B8-42001		U-BOLT	Uﾎﾞﾙﾄ	2	
27	278R0-63151		NUT	ﾅｯﾄ	4	
28	02000-00010		WASHER	ﾜｯｼｬ	4	
29	02000-00008		WASHER	ﾜｯｼｬ	4	
30	02010-00008		WASHER	ﾜｯｼｬ	4	
31	215E8-42241		PLUG	ﾌﾟﾗｸﾞ	2	
32	234A8-42571		NUT	ﾅｯﾄ	2	
K1	B-3045A-00020		KIT,REPAIR	ﾘﾍﾟｱｷｯﾄ	2	INC.5-9
K2	B-3045B-00026		KIT,HEAD	ﾍｯﾄﾞｷｯﾄ	2	INC.3,4

FIG.174 MAST PIPING [VM18G]

(M5018420) マストパイピング

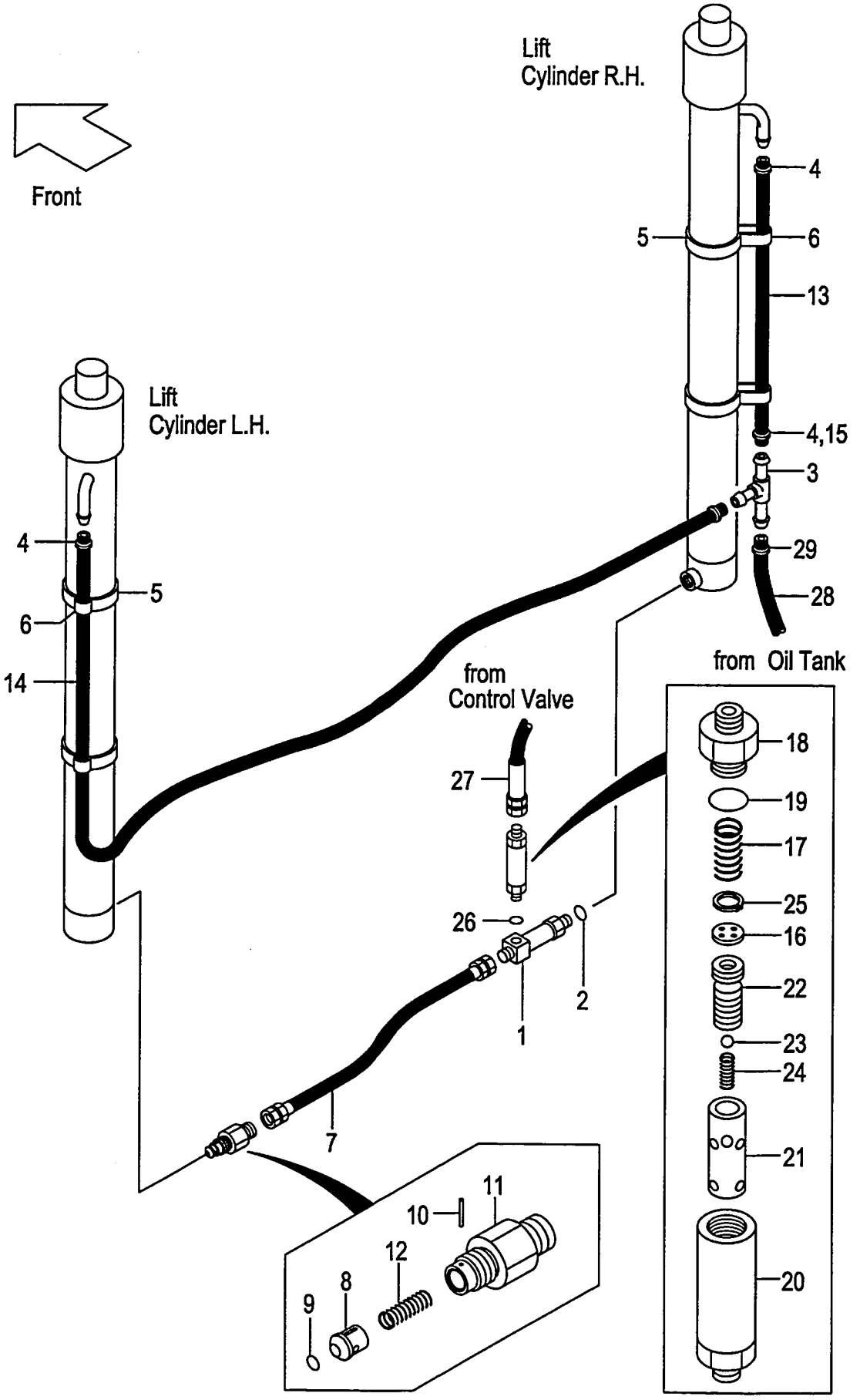

A:VM18G(0.9T)
B:VM18G(1T)
C:VM18G(1.5T)

FIG.174
(M5018420)

Item No	Part No.	Mark	Description		Req'd	Remarks : Serial No.
1	234A8-43051		THREE-WAY	ｽﾘｰｳｪｲ	1	
2	03320-00140		O-RING	Oﾘﾝｸﾞ	1	
3	23679-45051		THREE-WAY	ｽﾘｰｳｪｲ	1	
-	53675-55051		THREE-WAY	ｽﾘｰｳｪｲ	1	B,C [FC][RTL]
4	04911-00018		CLIP	ｸﾘｯﾌﾟ	4	
-	24329-46201		CLIP	ｸﾘｯﾌﾟ	2	B,C [FC][RTL]
5	04913-21380		BAND	ﾊﾞﾝﾄﾞ	4	
6	23678-42401		BAND,HOSE	ﾊﾞﾝﾄﾞ	4	
-	53675-54101		BAND	ﾊﾞﾝﾄﾞ	4	B,C [FC][RTL]
7	216G8-43501		HOSE	ﾎｰｽ	1	
A1	216G0-93201		VALVE-ASSY,CUT	ｶｯﾄﾊﾞﾙﾌﾞｱｯｾﾝ	1	INC.8-12
8	216G0-93211		PISTON	ﾋﾟｽﾄﾝ	1	
9	03320-00140		O-RING	Oﾘﾝｸﾞ	1	
10	02270-01014		PIN	ﾋﾟﾝ	1	
11	234A8-42621		NIPPLE	ﾆｯﾌﾟﾙ	1	
12	234A8-42611		SPRING	ｽﾌﾟﾘﾝｸﾞ	1	
13	23678-40075		HOSE VM200	ﾎｰｽ	1	
-	23678-40085		HOSE VM225	ﾎｰｽ	1	
-	23678-40100		HOSE VM250	ﾎｰｽ	1	
-	23678-40110		HOSE VM270,VM275	ﾎｰｽ	1	
-	23678-40125		HOSE VM300	ﾎｰｽ	1	
-	23678-40135		HOSE VM325	ﾎｰｽ	1	
-	23678-40140		HOSE VM330	ﾎｰｽ	1	
-	23678-40150		HOSE VM350	ﾎｰｽ	1	
-	23678-40160		HOSE VM366-375	ﾎｰｽ	1	
-	23678-40180		HOSE VM400	ﾎｰｽ	1	
-	23678-40190		HOSE VM425	ﾎｰｽ	1	
-	23678-40205		HOSE VM450	ﾎｰｽ	1	
-	23678-40215		HOSE VM475	ﾎｰｽ	1	
-	23678-40230		HOSE VM500	ﾎｰｽ	1	
-	23678-40260		HOSE VM550	ﾎｰｽ	1	
-	23678-40285		HOSE VM600	ﾎｰｽ	1	
-	04710-04075		HOSE VM200	ﾎｰｽ	1	B,C [FC][RTL]
-	04710-04085		HOSE VM225	ﾎｰｽ	1	B,C [FC][RTL]
-	04710-04100		HOSE VM250	ﾎｰｽ	1	B,C [FC][RTL]
-	04710-04110		HOSE VM270	ﾎｰｽ	1	B,C [FC][RTL]
-	04710-04110		HOSE VM275	ﾎｰｽ	1	B,C [FC][RTL]
-	04710-04125		HOSE VM300	ﾎｰｽ	1	B,C [FC][RTL]
-	04710-04135		HOSE VM325	ﾎｰｽ	1	B,C [FC][RTL]

FIG.174 MAST PIPING [VM18G]

(M5018420) マストパイピング

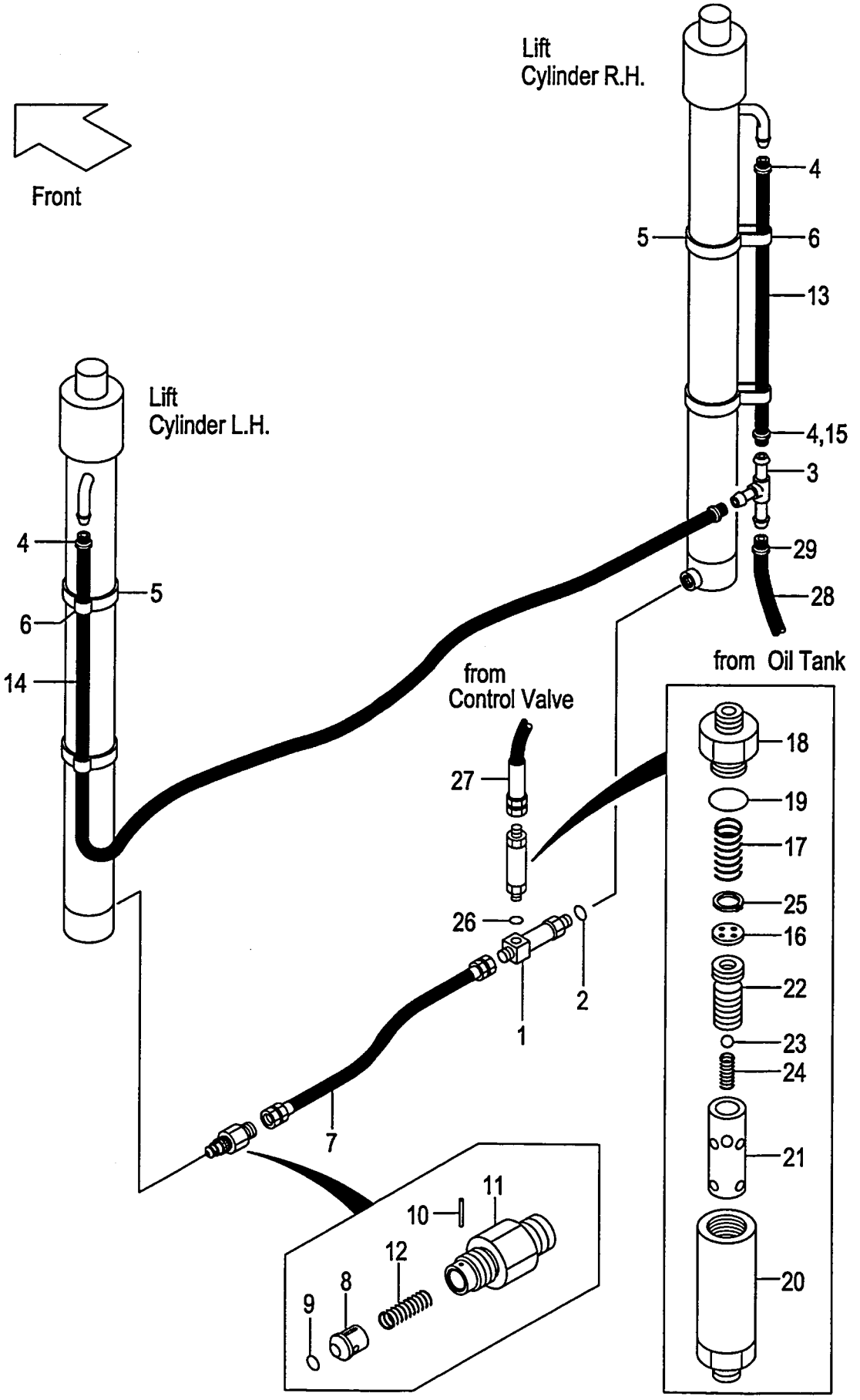

A:VM18G(0.9T)
B:VM18G(1T)
C:VM18G(1.5T)

FIG.174
(M5018420)

Item No	Part No.	Mark	Description	Req'd	Remarks : Serial No.
-	04710-04140		HOSE VM330 ホース	1	B,C [FC][RTL]
-	04710-04150		HOSE VM350 ホース	1	B,C [FC][RTL]
-	04710-04160		HOSE VM366 ホース	1	B,C [FC][RTL]
-	04710-04160		HOSE VM370 ホース	1	B,C [FC][RTL]
-	04710-04160		HOSE VM375 ホース	1	B,C [FC][RTL]
-	04710-04180		HOSE VM400 ホース	1	B,C [FC][RTL]
-	04710-04190		HOSE VM425 ホース	1	B,C [FC][RTL]
-	04710-04205		HOSE VM450 ホース	1	B,C [FC][RTL]
-	04710-04215		HOSE VM475 ホース	1	B,C [FC][RTL]
-	04710-04230		HOSE VM500 ホース	1	B,C [FC][RTL]
-	04710-04260		HOSE VM550 ホース	1	B,C [FC][RTL]
-	04710-04285		HOSE VM600 ホース	1	B,C [FC][RTL]
14	23678-40130		HOSE VM200 ホース	1	
-	23678-40140		HOSE VM225 ホース	1	
-	23678-40155		HOSE VM250 ホース	1	
-	23678-40165		HOSE VM270,VM275 ホース	1	
-	23678-40175		HOSE VM300 ホース	1	
-	23678-40190		HOSE VM325 ホース	1	
-	23678-40195		HOSE VM330 ホース	1	
-	23678-40205		HOSE VM350 ホース	1	
-	23678-40215		HOSE VM366-375 ホース	1	
-	23678-40235		HOSE VM400 ホース	1	
-	23678-40245		HOSE VM425 ホース	1	
-	23678-40260		HOSE VM450 ホース	1	
-	23678-40270		HOSE VM475 ホース	1	
-	23678-40285		HOSE VM500 ホース	1	
-	23678-40315		HOSE VM550 ホース	1	
-	23678-40340		HOSE VM600 ホース	1	
-	04710-04130		HOSE VM200 ホース	1	B,C [FC][RTL]
-	04710-04140		HOSE VM225 ホース	1	B,C [FC][RTL]
-	04710-04155		HOSE VM250 ホース	1	B,C [FC][RTL]
-	04710-04165		HOSE VM270 ホース	1	B,C [FC][RTL]
-	04710-04165		HOSE VM275 ホース	1	B,C [FC][RTL]

FIG.174 MAST PIPING [VM18G]

(M5018420) マストパイピング

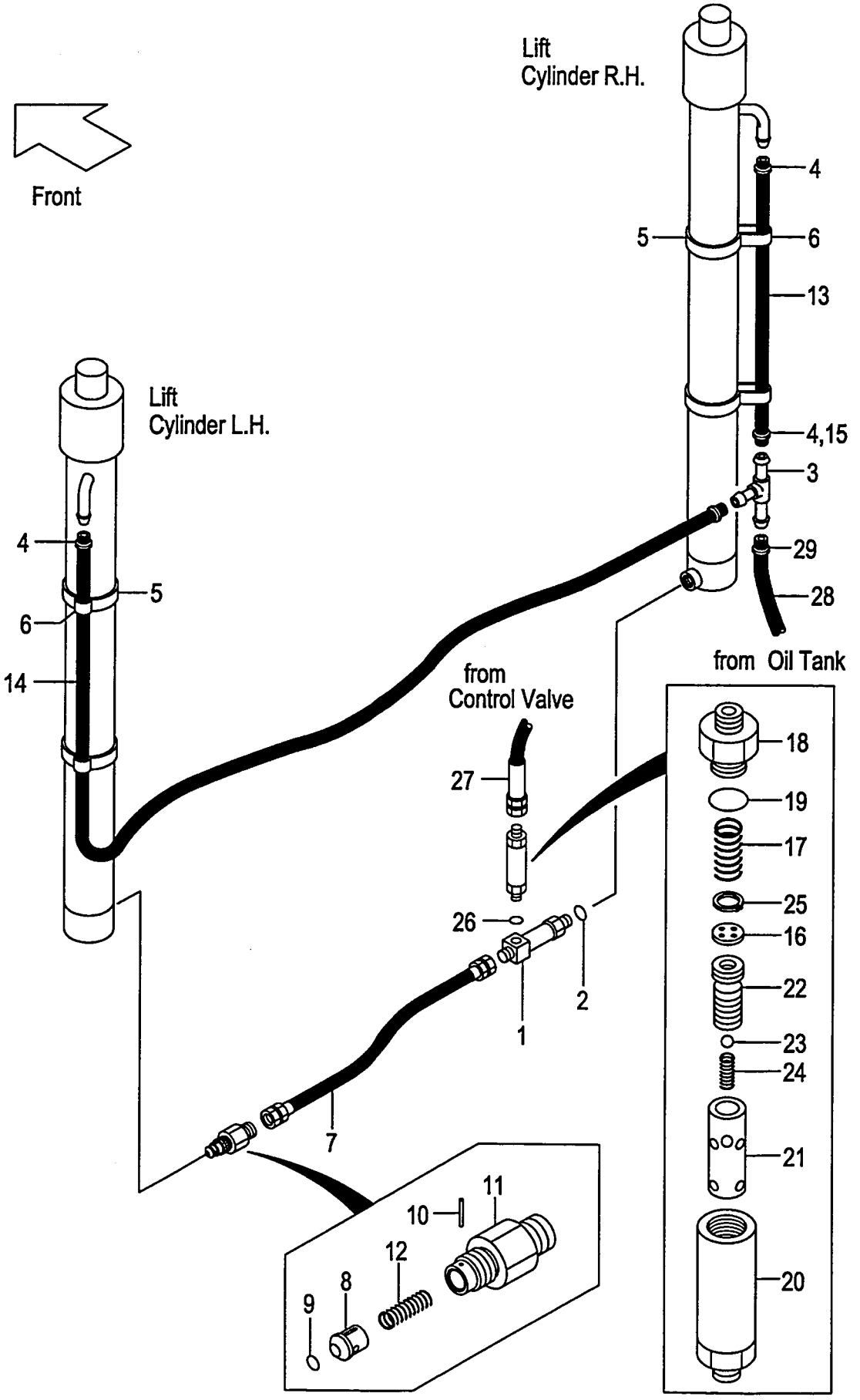

A:VM18G(0.9T)
B:VM18G(1T)
C:VM18G(1.5T)

FIG.174
(M5018420)

Item No	Part No.	Mark	Description		Req'd	Remarks : Serial No.
-	04710-04175		HOSE VM300	ホース	1	B,C [FC][RTL]
-	04710-04190		HOSE VM325	ホース	1	B,C [FC][RTL]
-	04710-04195		HOSE VM330	ホース	1	B,C [FC][RTL]
-	04710-04205		HOSE VM350	ホース	1	B,C [FC][RTL]
-	04710-04215		HOSE VM366	ホース	1	B,C [FC][RTL]
-	04710-04215		HOSE VM370	ホース	1	B,C [FC][RTL]
-	04710-04215		HOSE VM375	ホース	1	B,C [FC][RTL]
-	04710-04235		HOSE VM400	ホース	1	B,C [FC][RTL]
-	04710-04245		HOSE VM425	ホース	1	B,C [FC][RTL]
-	04710-04260		HOSE VM450	ホース	1	B,C [FC][RTL]
-	04710-04270		HOSE VM475	ホース	1	B,C [FC][RTL]
-	04710-04285		HOSE VM500	ホース	1	B,C [FC][RTL]
-	04710-04315		HOSE VM550	ホース	1	B,C [FC][RTL]
-	04710-04340		HOSE VM600	ホース	1	B,C [FC][RTL]
15	04911-00021		CLIP	ｸﾘｯﾌﾟ	2	B,C [FC][RTL]
A2	216G8-41001		REGULATOR-ASSY	ﾚｷﾞｭﾚｰﾀｱｯｾﾝ	1	INC.16-25
16	210F8-43031		PLATE	ﾌﾟﾚｰﾄ	1	
17	27979-43101		SPRING	ｽﾌﾟﾘﾝｸﾞ	1	
18	216G8-42121		NIPPLE	ﾆｯﾌﾟﾙ	1	
19	03300-00280		O-RING	Oﾘﾝｸﾞ	1	
20	214A8-43011		CASE	ｹｰｽ	1	
21	216G8-42111		SLEEVE	ｽﾘｰﾌﾞ	1	
22	24459-42921		PISTON	ﾋﾟｽﾄﾝ	1	
23	24459-42951		BALL,NYLON	ﾎﾞｰﾙ	1	
24	214A8-44151		SPRING	ｽﾌﾟﾘﾝｸﾞ	1	
25	02110-00018		RING,SNAP	ｽﾅｯﾌﾟﾘﾝｸﾞ	1	
26	03320-00180		O-RING	Oﾘﾝｸﾞ	1	
27	216G8-02502		HOSE	ホース	1	
-	216G8-02502		HOSE	ホース	1	B,C [FC][RTL]
28	23678-40095		HOSE	ホース	1	
-	04710-04110		HOSE	ホース	1	B,C [FC][RTL]
29	04911-00018		CLIP	ｸﾘｯﾌﾟ	1	
-	04914-00016		CLIP,TANK SIDE	ｸﾘｯﾌﾟ	1	

FIG.174 MAST PIPING [VM18G]

(M5018420) マストパイピング

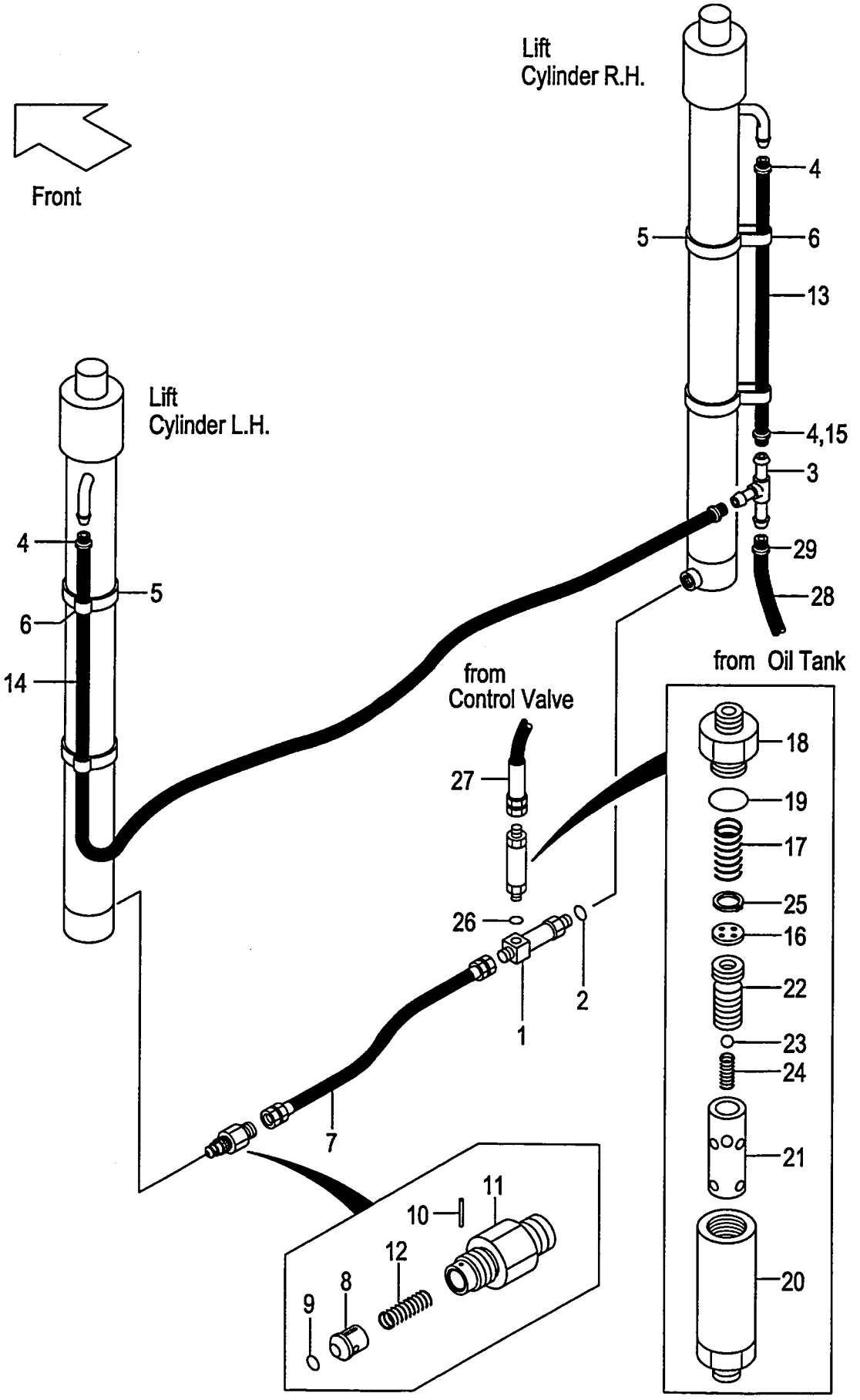

A:VM18G(0.9T)
B:VM18G(1T)
C:VM18G(1.5T)

FIG.174
(M5018420)

Item No	Part No.	Mark	Description	Req'd	Remarks : Serial No.
-	04911-00021		CLIP クリップ	2	B,C [FC][RTL]

FIG.175 FORK [VM18J]

(M5018120) フォーク

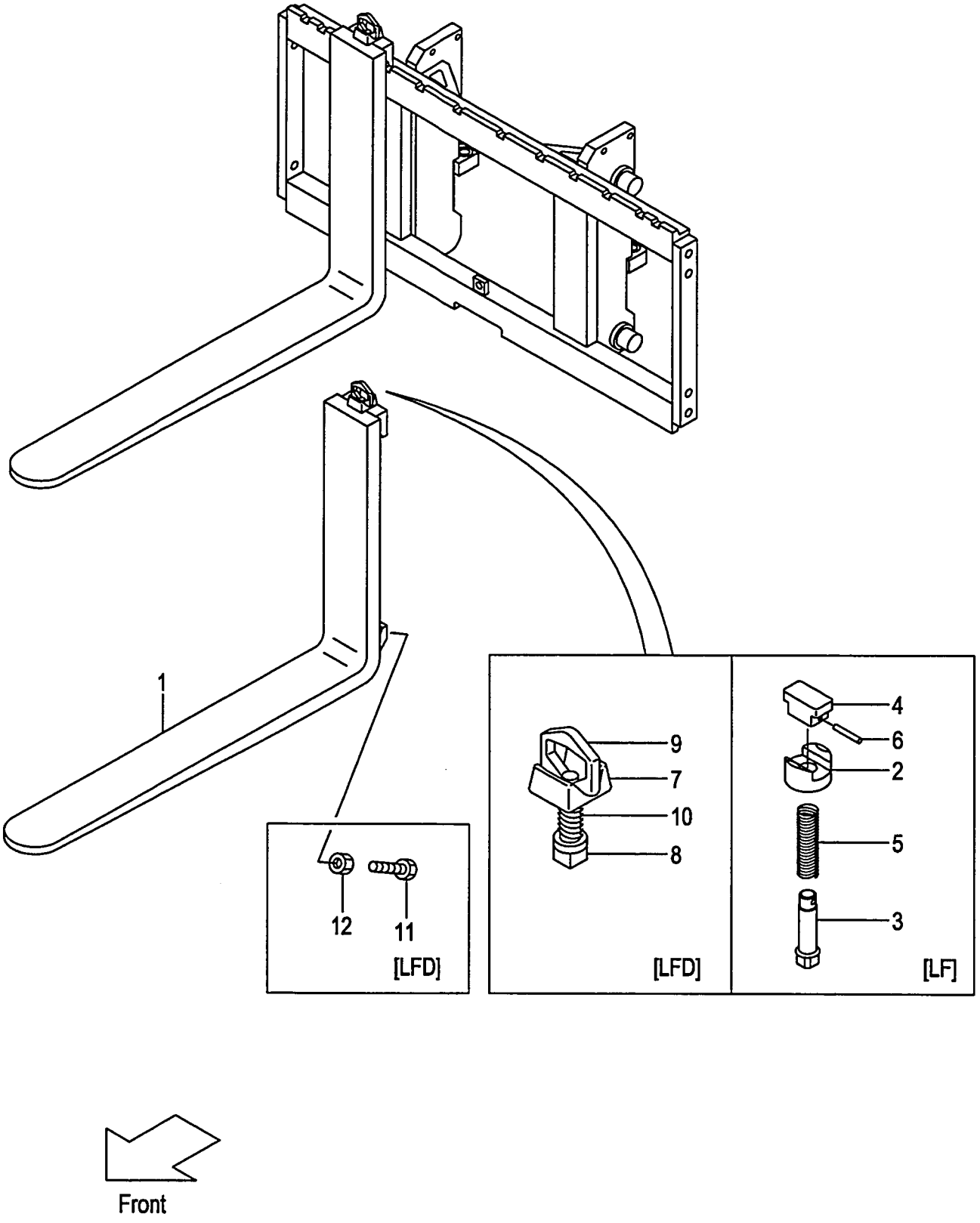

A:VM18J(1.8T)

Item No	Part No.	Mark	Description		Req'd	Remarks : Serial No.
1	210F8-10512		FORK	ﾌｫｰｸ	2	(L=920) INC.2-6
-	210F8-10502		FORK	ﾌｫｰｸ	2	[LF085] INC.2-6
-	210F8-10572		FORK	ﾌｫｰｸ	2	[LF090] INC.2-6
-	210F8-10512		FORK	ﾌｫｰｸ	2	[LF092] INC.2-6
-	210F8-10512		FORK	ﾌｫｰｸ	2	[EX] INC.2-6
-	210F8-10582		FORK	ﾌｫｰｸ	2	[LF100] INC.2-6
-	210F8-10522		FORK	ﾌｫｰｸ	2	[LF107] INC.2-6
-	210F8-10592		FORK	ﾌｫｰｸ	2	[LF110] INC.2-6
-	210F8-10602		FORK	ﾌｫｰｸ	2	[LF120] INC.2-6
-	210F8-10532		FORK	ﾌｫｰｸ	2	[LF122] INC.2-6
-	210H8-10612		FORK	ﾌｫｰｸ	2	[LF130] INC.2-6
-	210H8-10532		FORK	ﾌｫｰｸ	2	[LF137] INC.2-6
-	210H8-10622		FORK	ﾌｫｰｸ	2	[LF140] INC.2-6
-	210H8-10632		FORK	ﾌｫｰｸ	2	[LF150] INC.2-6
-	210H8-10542		FORK	ﾌｫｰｸ	2	[LF152] INC.2-6
-	210H8-10642		FORK	ﾌｫｰｸ	2	[LF160] INC.2-6
-	210H8-10552		FORK	ﾌｫｰｸ	2	[LF167] INC.2-6
-	216K8-10361		FORK	ﾌｫｰｸ	2	[LFD085] INC.7-10
-	216K8-10371		FORK	ﾌｫｰｸ	2	[LFD090] INC.7-10
-	216K8-10301		FORK	ﾌｫｰｸ	2	[LFD092] INC.7-10
-	216K8-10381		FORK	ﾌｫｰｸ	2	[LFD100] INC.7-10
-	216K8-10311		FORK	ﾌｫｰｸ	2	[LFD107] INC.7-10
-	216K8-10391		FORK	ﾌｫｰｸ	2	[LFD110] INC.7-10
-	216K8-10401		FORK	ﾌｫｰｸ	2	[LFD120] INC.7-10
-	216K8-10321		FORK	ﾌｫｰｸ	2	[LFD122] INC.7-10
-	216K8-10411		FORK	ﾌｫｰｸ	2	[LFD130] INC.7-10
-	216K8-10331		FORK	ﾌｫｰｸ	2	[LFD137] INC.7-10
-	216K8-10421		FORK	ﾌｫｰｸ	2	[LFD140] INC.7-10
-	216K8-10431		FORK	ﾌｫｰｸ	2	[LFD150] INC.7-10
-	216K8-10341		FORK	ﾌｫｰｸ	2	[LFD152] INC.7-10
-	216K8-10441		FORK	ﾌｫｰｸ	2	[LFD160] INC.7-10
-	216K8-10351		FORK	ﾌｫｰｸ	2	[LFD167] INC.7-10
2	216G8-12921		HANDLE	ﾊﾝﾄﾞﾙ	2	[LF]
3	231A8-12001		PIN	ﾋﾟﾝ	2	[LF]
4	231A8-12011		KNOB	ﾉﾌﾞ	2	[LF]
5	231A8-12021		SPRING	ｽﾌﾟﾘﾝｸﾞ	2	[LF]
6	231A8-12031		PIN,SPRING	ﾋﾟﾝ	2	[LF]
A1	214A8-11001		STOPPER-ASSY	ｽﾄｯﾊﾟｱｯｾﾝ	2	[LFD] INC.7-10
7	214A8-12001		HEAD	ﾍｯﾄﾞ	2	[LFD]
8	214A8-12011		STOPPER	ｽﾄｯﾊﾟ	2	[LFD]
9	214A8-12021		HANDLE	ﾊﾝﾄﾞﾙ	2	[LFD]
10	214A8-12031		SPRING	ｽﾌﾟﾘﾝｸﾞ	2	[LFD]
11	216G8-12101		BOLT	ﾎﾞﾙﾄ	4	[LFD]
12	01402-00010		NUT	ﾅｯﾄ	4	[LFD]

FIG.176 LIFT BRACKET [VM18J]

(M5018230) ﾘﾌﾄﾌﾞﾗｹｯﾄ

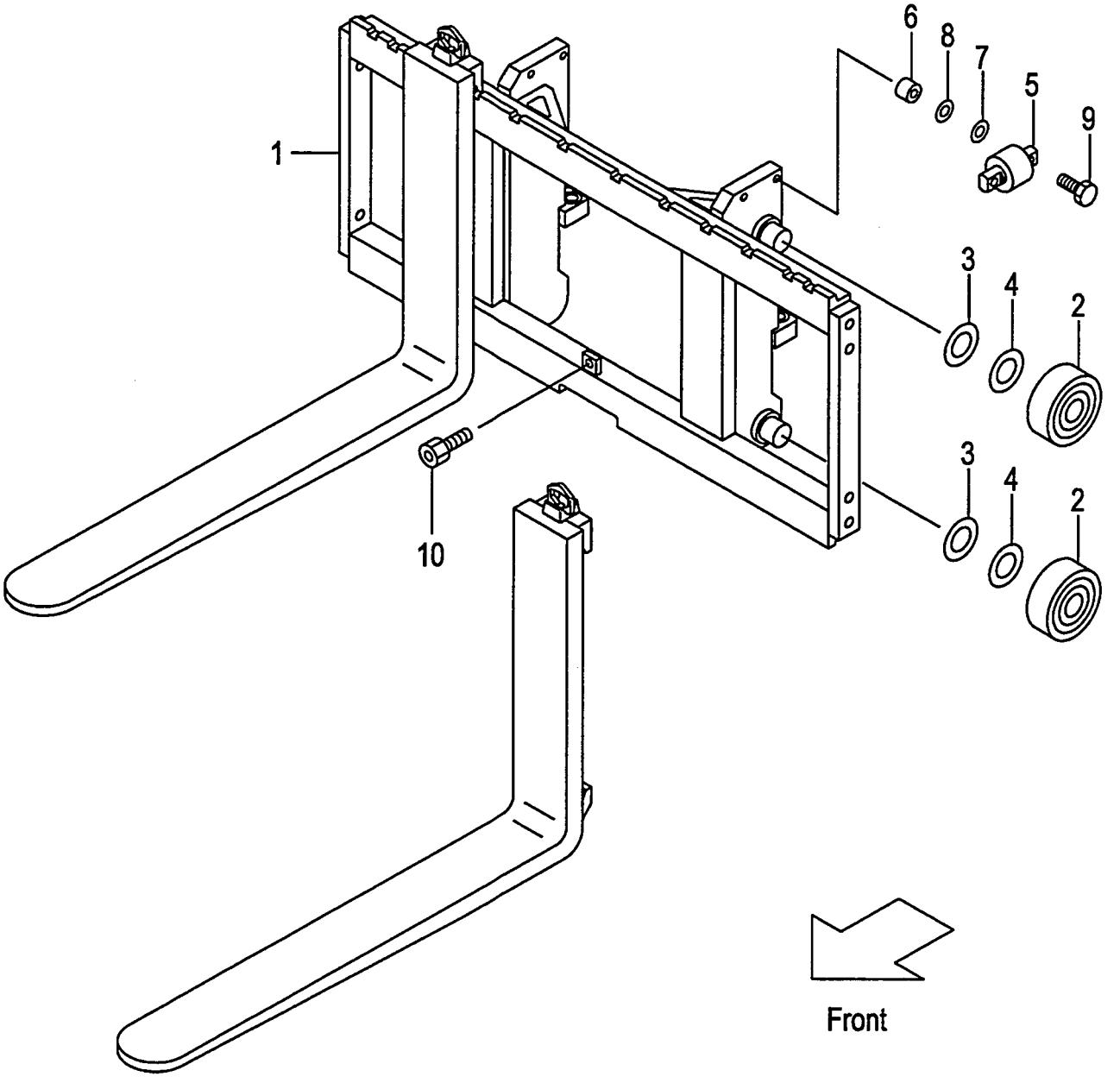

A:VM18J(1.8T)

Item No	Part No.	Mark	Description		Req'd	Remarks : Serial No.
1	218J8-20001		BRACKET,LIFT	ﾌﾞﾗｹｯﾄ	1	
2	211F8-22201		ROLLER,END,102.0	ﾛｰﾗ	4	
-	211F8-22211		ROLLER,END,102.5	ﾛｰﾗ	(4)	
-	511F3-74021		ROLLER,END,102.0	ﾛｰﾗ	4	[FC][FCS35][FCS55][CS35][CSA] [FCS45]
-	511F3-74031		ROLLER,END,102.5	ﾛｰﾗ	(4)	[FC][FCS35][FCS55][CS35][CSA] [FCS45]
3	211F8-22261		SHIM,T-0.5	ｼﾑ	4	
-	211F8-22261		SHIM,T-0.5	ｼﾑ	4	[FC][FCS35][FCS55][CS35][CSA] [FCS45]
4	211F8-22271		SHIM,T-1.0	ｼﾑ	8	
-	211F8-22271		SHIM,T-1.0	ｼﾑ	8	[FC][FCS35][FCS55][CS35][CSA] [FCS45]
5	22018-30304		ROLLER,SIDE	ﾛｰﾗ	2	
-	510F3-74001		ROLLER,SIDE	ﾛｰﾗ	2	[FC][FCS35][FCS55][CS35][CSA] [FCS45]
6	22578-32841		SPACER	ｽﾍﾟｰｻ	4	
-	22578-32841		SPACER	ｽﾍﾟｰｻ	4	[FC][FCS35][FCS55][CS35][CSA] [FCS45]
7	22018-30261		SHIM	ｼﾑ	8	
-	22018-30261		SHIM	ｼﾑ	8	[FC][FCS35][FCS55][CS35][CSA] [FCS45]
8	22018-30121		SHIM	ｼﾑ	4	
-	22018-30121		SHIM	ｼﾑ	4	[FC][FCS35][FCS55][CS35][CSA] [FCS45]
9	01103-10050		BOLT & WASHER	ﾎﾞﾙﾄ & ﾜｯｼｬ	4	
10	01184-12025		BOLT & WASHER	ﾎﾞﾙﾄ & ﾜｯｼｬ	1	

FIG.177 BACKREST [VM18J]

(M5018240) ﾊﾞｯｸﾚｽﾄ

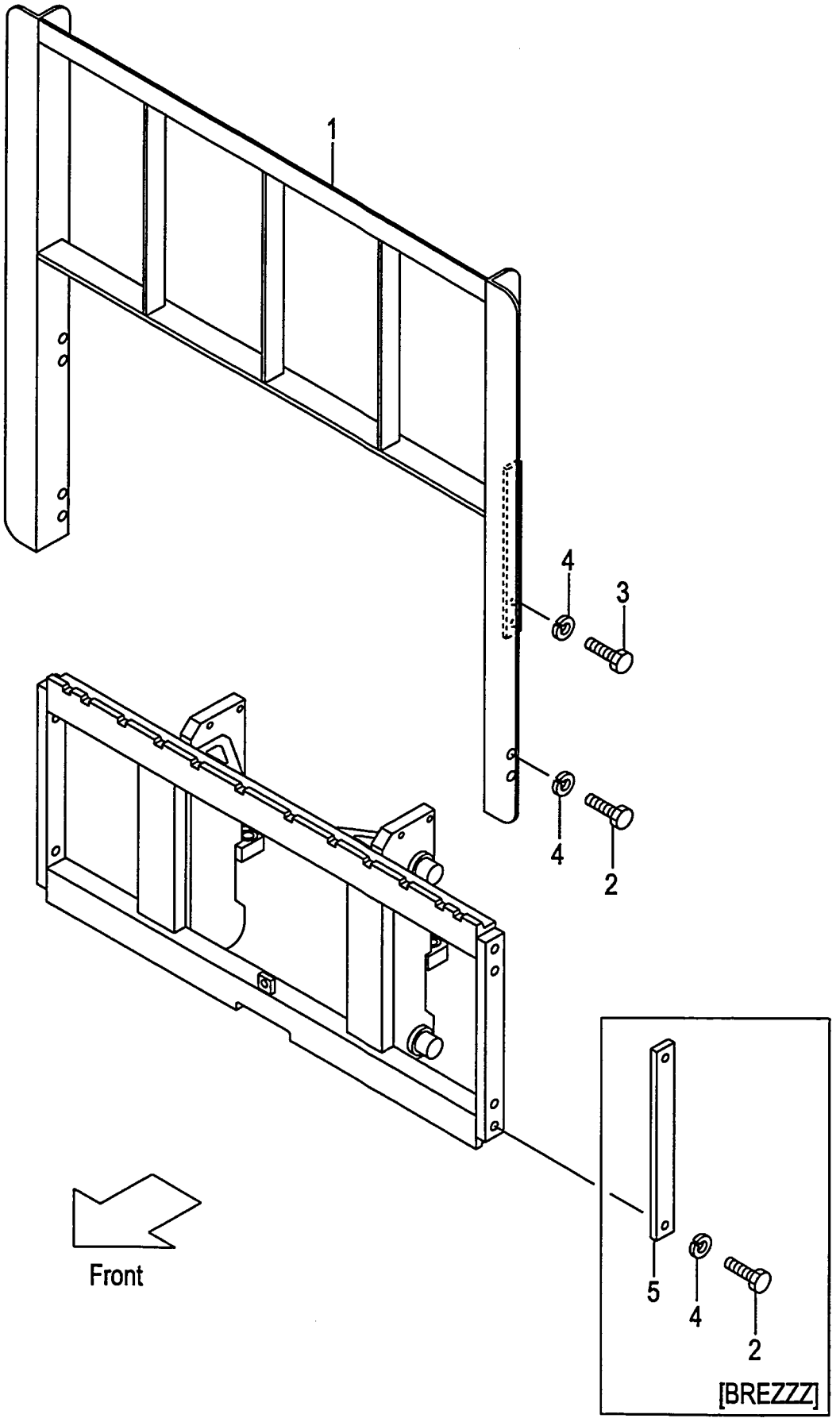

A:VM18J(1.8T)

Item No	Part No.	Mark	Description		Req'd	Remarks : Serial No.
1	216G8-22201		BACKREST	ﾊﾞｯｸﾚｽﾄ	1	
2	01100-14025		BOLT	ﾎﾞﾙﾄ	4	
-	01100-14025		BOLT	ﾎﾞﾙﾄ	4	[BREZZZ]
3	01100-14030		BOLT	ﾎﾞﾙﾄ	4	
4	02010-00014		WASHER	ﾜｯｼｬ	8	
-	02010-00014		WASHER	ﾜｯｼｬ	4	[BREZZZ]
5	23659-42161		PLATE	ﾌﾟﾚｰﾄ	2	[BREZZZ]

FIG.178 MAST [VM18J]

(M5018320) マスト

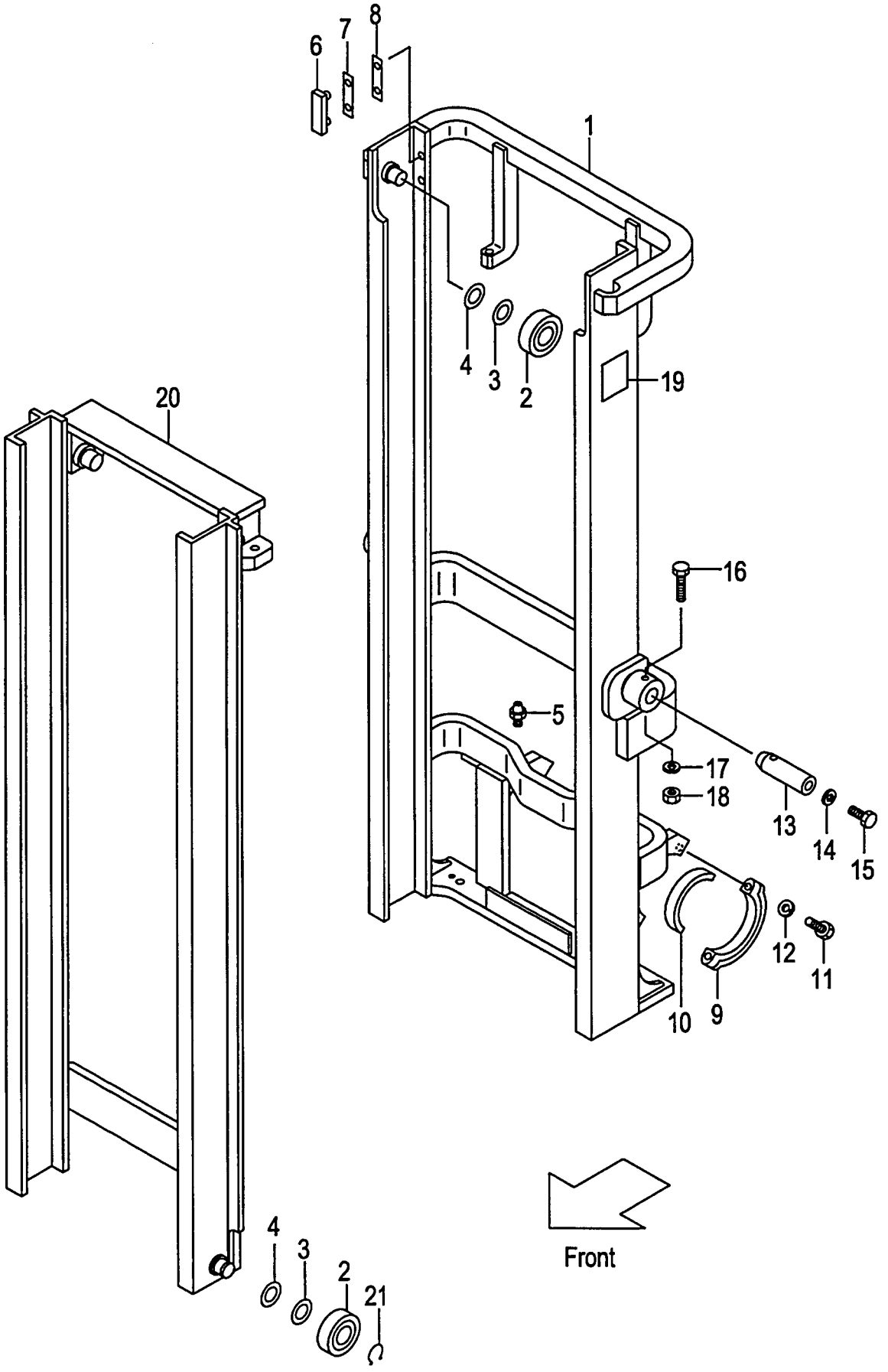

A:VM18J(1.8T)

Item No	Part No.	Mark	Description		Req'd	Remarks : Serial No.
1	218G8-30211		MAST,OUTER VM200	ｱｳﾀﾏｽﾄ	1	
-	218G8-30221		MAST,OUTER VM225	ｱｳﾀﾏｽﾄ	1	
-	218G8-30231		MAST,OUTER VM250	ｱｳﾀﾏｽﾄ	1	
-	218G8-30241		MAST,OUTER VM270	ｱｳﾀﾏｽﾄ	1	
-	218G8-30251		MAST,OUTER VM275	ｱｳﾀﾏｽﾄ	1	
-	218G8-30201		MAST,OUTER VM300	ｱｳﾀﾏｽﾄ	1	
-	218G8-30261		MAST,OUTER VM325	ｱｳﾀﾏｽﾄ	1	
-	218G8-30271		MAST,OUTER VM330	ｱｳﾀﾏｽﾄ	1	
-	218E8-30281		MAST,OUTER VM350	ｱｳﾀﾏｽﾄ	1	
-	218G8-30291		MAST,OUTER VM366	ｱｳﾀﾏｽﾄ	1	
-	218G8-30301		MAST,OUTER VM370	ｱｳﾀﾏｽﾄ	1	
-	218G8-30311		MAST,OUTER VM375	ｱｳﾀﾏｽﾄ	1	
-	218G8-30321		MAST,OUTER VM400	ｱｳﾀﾏｽﾄ	1	
-	218G8-30331		MAST,OUTER VM425	ｱｳﾀﾏｽﾄ	1	
-	218G8-30341		MAST,OUTER VM450	ｱｳﾀﾏｽﾄ	1	
-	218G8-30351		MAST,OUTER VM475	ｱｳﾀﾏｽﾄ	1	
-	218G8-30361		MAST,OUTER VM500	ｱｳﾀﾏｽﾄ	1	
-	218G8-30371		MAST,OUTER VM550	ｱｳﾀﾏｽﾄ	1	
-	218G8-30381		MAST,OUTER VM600	ｱｳﾀﾏｽﾄ	1	
2	211F8-22221		ROLLER,END,102.0	ﾛｰﾗ	2	
-	211F8-22231		ROLLER,END,102.5	ﾛｰﾗ	(2)	
-	511F3-74021		ROLLER,END,102.0	ﾛｰﾗ	2	[FC][FCS35][FCS55][CS35][CSA] [FCS45]
-	511F3-74031		ROLLER,END,102.5	ﾛｰﾗ	(2)	[FC][FCS35][FCS55][CS35][CSA] [FCS45]
-	211F8-22221		ROLLER,END,102.0	ﾛｰﾗ	2	
-	211F8-22231		ROLLER,END,102.5	ﾛｰﾗ	(2)	
-	511F3-74021		ROLLER,END,102.0	ﾛｰﾗ	2	[FCS35][FCS55][CS35][FCS45]
-	511F3-74031		ROLLER,END,102.5	ﾛｰﾗ	(2)	[FCS35][FCS55][CS35][FCS45]
3	211F8-22261		SHIM,T-0.5	ｼﾑ	4	[FC][FCS35][FCS55][CS35][CSA] [FCS45]
-	211F8-22261		SHIM,T-0.5	ｼﾑ	8	
-	211F8-22261		SHIM,T-0.5	ｼﾑ	4	[FCS35][FCS55][CS35][FCS45]
4	211F8-22271		SHIM,T-1.0	ｼﾑ	8	[FC][FCS35][FCS55][CS35][CSA] [FCS45]
-	211F8-22271		SHIM,T-1.0	ｼﾑ	16	
-	211F8-22271		SHIM,T-1.0	ｼﾑ	8	[FCS35][FCS55][CS35][FCS45]
5	04901-00100		FITTING	ﾌｨｯﾃｨﾝｸﾞ	2	
6	216G8-33401		SLIPPER	ｽﾘｯﾊﾟ	2	
7	216G8-33361		SHIM,T-0.5	ｼﾑ	8	
8	216G8-33371		SHIM,T-1.0	ｼﾑ	4	
9	210F6-12441		CAP	ｷｬｯﾌﾟ	2	
10	216G8-02001		BUSHING	ﾌﾞｯｼﾝｸﾞ	2	
11	01100-14065		BOLT	ﾎﾞﾙﾄ	4	
12	02010-00014		WASHER	ﾜｯｼｬ	4	
13	210F8-02102		PIN	ﾋﾟﾝ	2	
14	216G8-52311		WASHER	ﾜｯｼｬ	2	
15	216G4-12251		BOLT	ﾎﾞﾙﾄ	2	
16	216G8-52321		BOLT	ﾎﾞﾙﾄ	2	
17	02010-20012		WASHER	ﾜｯｼｬ	2	

FIG.178 MAST [VM18J]

(M5018320) マスト

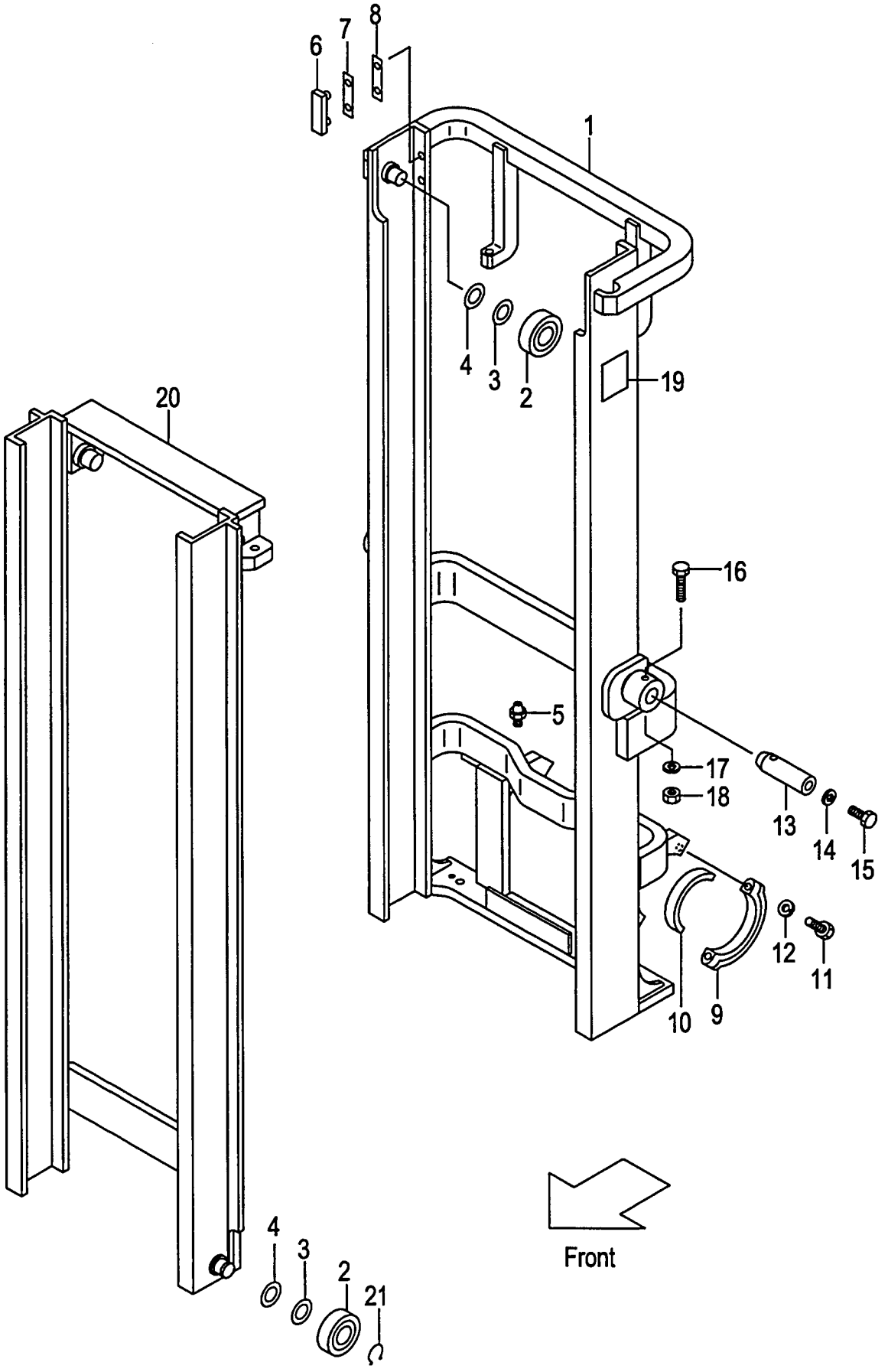

A:VM18J(1.8T)

Item No	Part No.	Mark	Description		Req'd	Remarks : Serial No.
18	234A8-42571		NUT	ﾅｯﾄ	2	
19	23678-06002		PLATE,NAME	ﾌﾟﾚｰﾄ	1	
20	218G8-30411		MAST,INNER VM200	ｲﾝﾅﾏｽﾄ	1	
-	218G8-30421		MAST,INNER VM225	ｲﾝﾅﾏｽﾄ	1	
-	218G8-30431		MAST,INNER VM250	ｲﾝﾅﾏｽﾄ	1	
-	218G8-30441		MAST,INNER VM270	ｲﾝﾅﾏｽﾄ	1	
-	218G8-30451		MAST,INNER VM275	ｲﾝﾅﾏｽﾄ	1	
-	218G8-30401		MAST,INNER VM300	ｲﾝﾅﾏｽﾄ	1	
-	218G8-30461		MAST,INNER VM325	ｲﾝﾅﾏｽﾄ	1	
-	218G8-30471		MAST,INNER VM330	ｲﾝﾅﾏｽﾄ	1	
-	218G8-30481		MAST,INNER VM350	ｲﾝﾅﾏｽﾄ	1	
-	218G8-30491		MAST,INNER VM366	ｲﾝﾅﾏｽﾄ	1	
-	218G8-30501		MAST,INNER VM370	ｲﾝﾅﾏｽﾄ	1	
-	218G8-30511		MAST,INNER VM375	ｲﾝﾅﾏｽﾄ	1	
-	218G8-30521		MAST,INNER VM400	ｲﾝﾅﾏｽﾄ	1	
-	218G8-30531		MAST,INNER VM425	ｲﾝﾅﾏｽﾄ	1	
-	218G8-30541		MAST,INNER VM450	ｲﾝﾅﾏｽﾄ	1	
-	218G8-30551		MAST,INNER VM475	ｲﾝﾅﾏｽﾄ	1	
-	218G8-30561		MAST,INNER VM500	ｲﾝﾅﾏｽﾄ	1	
-	218G8-30571		MAST,INNER VM550	ｲﾝﾅﾏｽﾄ	1	
-	218G8-30581		MAST,INNER VM600	ｲﾝﾅﾏｽﾄ	1	
21	09192-30035		RING,SNAP	ｽﾅｯﾌﾟﾘﾝｸﾞ	2	
-	09192-30035		RING,SNAP	ｽﾅｯﾌﾟﾘﾝｸﾞ	2	[FC][FCS35][FCS55][CS35][CSA] [FCS45]

FIG.179 LIFT CYLINDER [VM18J]

(M5018430) ﾘﾌﾄｼﾘﾝﾀﾞ

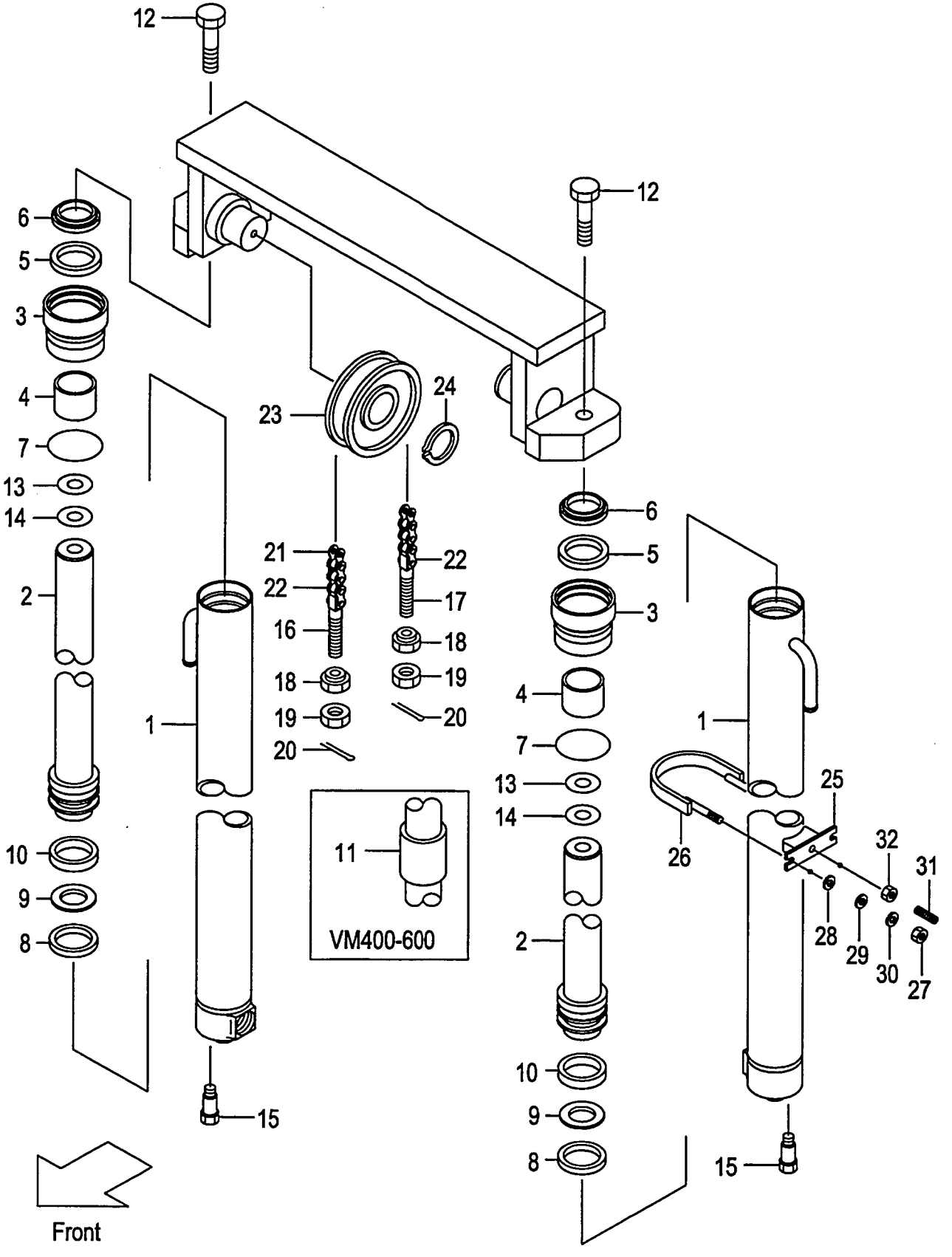

A:VM18J(1.8T)

Item No	Part No.	Mark	Description		Req'd	Remarks : Serial No.
A1	218G8-40011		CYL-ASSY,LIFT VM200	ｼﾘﾝﾀﾞｱｯｾﾝ	2	INC.1-11
-	218G8-40021		CYL-ASSY,LIFT VM225	ｼﾘﾝﾀﾞｱｯｾﾝ	2	INC.1-11
-	218G8-40031		CYL-ASSY,LIFT VM250	ｼﾘﾝﾀﾞｱｯｾﾝ	2	INC.1-11
-	218G8-40041		CYL-ASSY,LIFT VM270	ｼﾘﾝﾀﾞｱｯｾﾝ	2	INC.1-11
-	218G8-40051		CYL-ASSY,LIFT VM275	ｼﾘﾝﾀﾞｱｯｾﾝ	2	INC.1-11
-	218G8-40001		CYL-ASSY,LIFT VM300	ｼﾘﾝﾀﾞｱｯｾﾝ	2	INC.1-11
-	218G8-40061		CYL-ASSY,LIFT VM325	ｼﾘﾝﾀﾞｱｯｾﾝ	2	INC.1-11
-	218G8-40071		CYL-ASSY,LIFT VM330	ｼﾘﾝﾀﾞｱｯｾﾝ	2	INC.1-11
-	218G8-40081		CYL-ASSY,LIFT VM350	ｼﾘﾝﾀﾞｱｯｾﾝ	2	INC.1-11
-	218G8-40091		CYL-ASSY,LIFT VM366	ｼﾘﾝﾀﾞｱｯｾﾝ	2	INC.1-11
-	218G8-40101		CYL-ASSY,LIFT VM370	ｼﾘﾝﾀﾞｱｯｾﾝ	2	INC.1-11
-	218G8-40111		CYL-ASSY,LIFT VM375	ｼﾘﾝﾀﾞｱｯｾﾝ	2	INC.1-11
-	218G8-40121		CYL-ASSY,LIFT VM400	ｼﾘﾝﾀﾞｱｯｾﾝ	2	INC.1-11
-	218G8-40131		CYL-ASSY,LIFT VM425	ｼﾘﾝﾀﾞｱｯｾﾝ	2	INC.1-11
-	218G8-40141		CYL-ASSY,LIFT VM450	ｼﾘﾝﾀﾞｱｯｾﾝ	2	INC.1-11
-	218G8-40151		CYL-ASSY,LIFT VM475	ｼﾘﾝﾀﾞｱｯｾﾝ	2	INC.1-11
-	218G8-40161		CYL-ASSY,LIFT VM500	ｼﾘﾝﾀﾞｱｯｾﾝ	2	INC.1-11
-	218G8-40171		CYL-ASSY,LIFT VM550	ｼﾘﾝﾀﾞｱｯｾﾝ	2	INC.1-11
-	218G8-40181		CYL-ASSY,LIFT VM600	ｼﾘﾝﾀﾞｱｯｾﾝ	2	INC.1-11
1	B-30697-49101		BODY,CYL VM200	ﾎﾞﾃﾞｨ	2	
-	B-30697-49201		BODY,CYL VM225	ﾎﾞﾃﾞｨ	2	
-	B-30697-49301		BODY,CYL VM250	ﾎﾞﾃﾞｨ	2	
-	B-30697-49401		BODY,CYL VM270	ﾎﾞﾃﾞｨ	2	
-	B-30697-49501		BODY,CYL VM275	ﾎﾞﾃﾞｨ	2	
-	B-30697-49601		BODY,CYL VM300	ﾎﾞﾃﾞｨ	2	
-	B-30697-49701		BODY,CYL VM325	ﾎﾞﾃﾞｨ	2	
-	B-30697-49801		BODY,CYL VM330	ﾎﾞﾃﾞｨ	2	
-	B-30697-49901		BODY,CYL VM350	ﾎﾞﾃﾞｨ	2	
-	B-30697-50001		BODY,CYL VM366	ﾎﾞﾃﾞｨ	2	
-	B-30697-50101		BODY,CYL VM370	ﾎﾞﾃﾞｨ	2	
-	B-30697-50201		BODY,CYL VM375	ﾎﾞﾃﾞｨ	2	
-	B-30697-50301		BODY,CYL VM400	ﾎﾞﾃﾞｨ	2	
-	B-30697-50401		BODY,CYL VM425	ﾎﾞﾃﾞｨ	2	
-	B-30697-50501		BODY,CYL VM450	ﾎﾞﾃﾞｨ	2	
-	B-30697-50601		BODY,CYL VM475	ﾎﾞﾃﾞｨ	2	
-	B-30697-50701		BODY,CYL VM500	ﾎﾞﾃﾞｨ	2	
-	B-30697-50801		BODY,CYL VM550	ﾎﾞﾃﾞｨ	2	
-	B-30697-50901		BODY,CYL VM600	ﾎﾞﾃﾞｨ	2	
2	B-B6527-62102		ROD,PISTON VM200	ﾛｯﾄﾞ	2	
-	B-B6537-88202		ROD,PISTON VM225	ﾛｯﾄﾞ	2	
-	B-B6527-62302		ROD,PISTON VM250	ﾛｯﾄﾞ	2	
-	B-B6527-62402		ROD,PISTON VM270	ﾛｯﾄﾞ	2	
-	B-B6537-88502		ROD,PISTON VM275	ﾛｯﾄﾞ	2	
-	B-B6527-62502		ROD,PISTON VM300	ﾛｯﾄﾞ	2	
-	B-B6537-88702		ROD,PISTON VM325	ﾛｯﾄﾞ	2	
-	B-B6527-62602		ROD,PISTON VM330	ﾛｯﾄﾞ	2	
-	B-B6527-62702		ROD,PISTON VM350	ﾛｯﾄﾞ	2	
-	B-B6537-89002		ROD,PISTON VM366	ﾛｯﾄﾞ	2	
-	B-B6527-62802		ROD,PISTON VM370	ﾛｯﾄﾞ	2	
-	B-B6537-89202		ROD,PISTON VM375	ﾛｯﾄﾞ	2	

FIG.179 LIFT CYLINDER [VM18J]

(M5018430) ﾘﾌﾄｼﾘﾝﾀﾞ

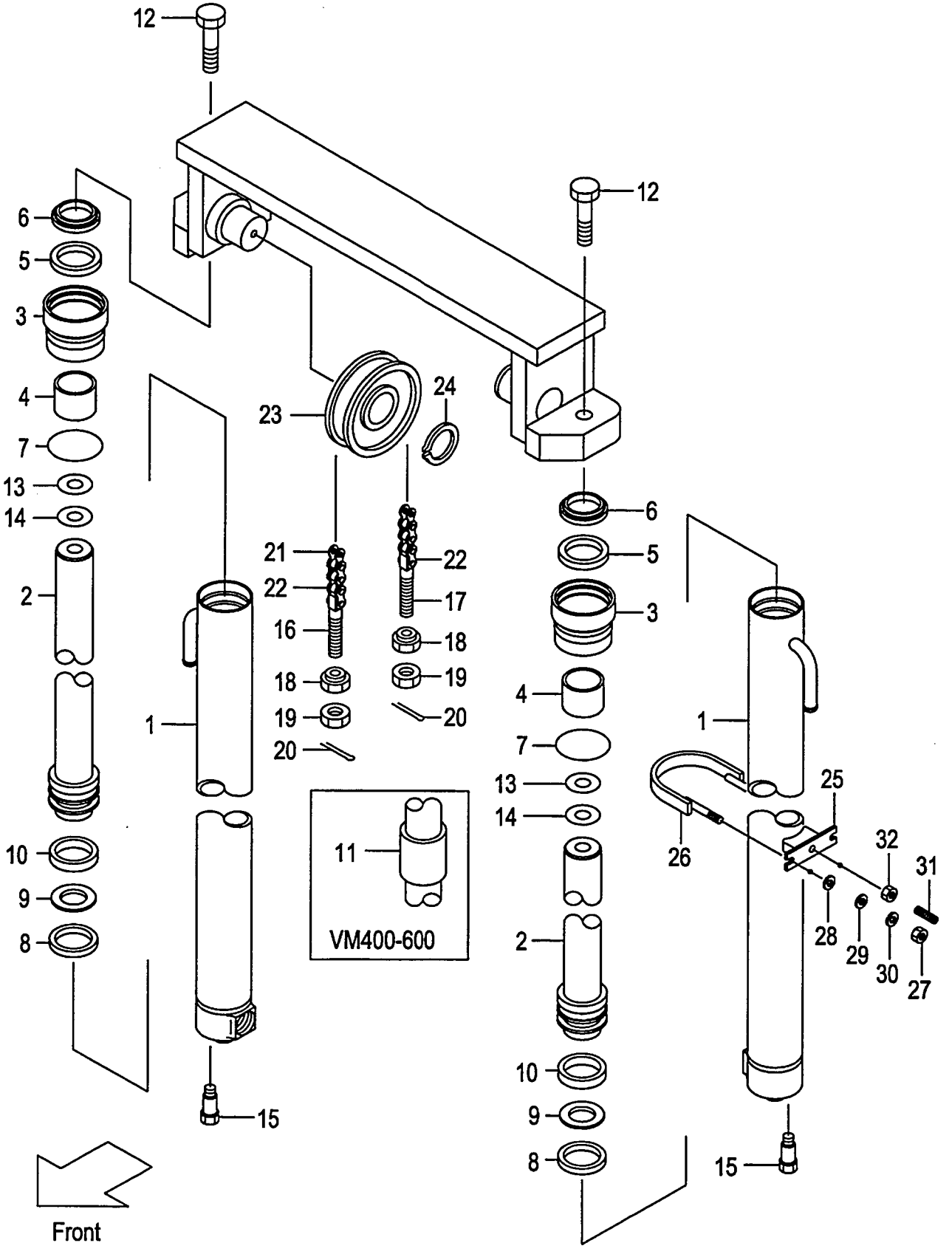

A:VM18J(1.8T)

Item No	Part No.	Mark	Description		Req'd	Remarks : Serial No.
-	B-B6527-64802		ROD,PISTON VM400	ﾛｯﾄﾞ	2	
-	B-B6537-89402		ROD,PISTON VM425	ﾛｯﾄﾞ	2	
-	B-B6527-65002		ROD,PISTON VM450	ﾛｯﾄﾞ	2	
-	B-B6537-89602		ROD,PISTON VM475	ﾛｯﾄﾞ	2	
-	B-B6527-65302		ROD,PISTON VM500	ﾛｯﾄﾞ	2	
-	B-B6527-63502		ROD,PISTON VM550	ﾛｯﾄﾞ	2	
-	B-B6537-89902		ROD,PISTON VM600	ﾛｯﾄﾞ	2	
3	B-30121-45018	‡	CAP	ｷｬｯﾌﾟ	2	
4	B-30131-35017	‡	BUSHING	ﾌﾞｯｼﾝｸﾞ	2	
5	B-30961-03512	‡	U-RING	Uﾘﾝｸﾞ	2	
6	B-30191-35025	‡	RING,WIPER	ﾘﾝｸﾞ	2	
7	B-30161-91773	‡	O-RING	Oﾘﾝｸﾞ	2	
8	B-30161-45046	‡	U-RING	Uﾘﾝｸﾞ	2	
9	B-30461-45039	‡	RING	ﾘﾝｸﾞ	2	
10	B-30131-45018		BUSHING	ﾌﾞｯｼﾝｸﾞ	2	
11	B-30111-35012		SPACER VM400	ｽﾍﾟｰｻ	2	
-	B-30111-35012		SPACER VM425	ｽﾍﾟｰｻ	2	
-	B-30111-35012		SPACER VM450	ｽﾍﾟｰｻ	2	
-	B-30111-35012		SPACER VM475	ｽﾍﾟｰｻ	2	
-	B-30111-35012		SPACER VM500	ｽﾍﾟｰｻ	2	
-	B-30111-35008		SPACER VM550	ｽﾍﾟｰｻ	2	
-	B-30111-35008		SPACER VM600	ｽﾍﾟｰｻ	2	
12	01103-12035		BOLT	ﾎﾞﾙﾄ	2	
13	22717-40081		SHIM	ｼﾑ	4	
14	22517-40051		SHIM	ｼﾑ	4	
15	216G8-43151		BOLT	ﾎﾞﾙﾄ	2	
16	218G8-42501		PIN,ANCHOR	ﾋﾟﾝ	2	
-	510F5-54051		PIN,ANCHOR	ﾋﾟﾝ	2	[FC][FCS35][FCS45][FCS55]
17	218G8-42511		PIN,ANCHOR	ﾋﾟﾝ	2	
-	510F5-54061		PIN,ANCHOR	ﾋﾟﾝ	2	[FC][FCS35][FCS45][FCS55]
18	22118-40181		NUT	ﾅｯﾄ	4	
-	22118-40181		NUT	ﾅｯﾄ	4	[FC][FCS35][FCS45][FCS55]
19	01400-00014		NUT	ﾅｯﾄ	4	
-	01400-00014		NUT	ﾅｯﾄ	4	[FC][FCS35][FCS45][FCS55]
20	02200-03030		PIN	ﾋﾟﾝ	4	
-	02200-03030		PIN	ﾋﾟﾝ	4	[FC][FCS35][FCS45][FCS55]
21	218G8-45791		CHAIN VM200	ﾁｪｰﾝ	2	
-	218G8-45871		CHAIN VM225	ﾁｪｰﾝ	2	
-	218G8-45951		CHAIN VM250	ﾁｪｰﾝ	2	
-	218G8-46011		CHAIN VM270	ﾁｪｰﾝ	2	
-	218G8-46031		CHAIN VM275	ﾁｪｰﾝ	2	
-	218G8-46111		CHAIN VM300	ﾁｪｰﾝ	2	
-	218G8-46191		CHAIN VM325	ﾁｪｰﾝ	2	
-	218G8-46211		CHAIN VM330	ﾁｪｰﾝ	2	
-	218G8-46271		CHAIN VM350	ﾁｪｰﾝ	2	
-	218G8-46311		CHAIN VM366	ﾁｪｰﾝ	2	
-	218G8-46331		CHAIN VM370	ﾁｪｰﾝ	2	
-	218G8-46351		CHAIN VM375	ﾁｪｰﾝ	2	
-	218G8-46451		CHAIN VM400	ﾁｪｰﾝ	2	
-	218G8-46531		CHAIN VM425	ﾁｪｰﾝ	2	

FIG.179 LIFT CYLINDER [VM18J]

(M5018430) ﾘﾌﾄｼﾘﾝﾀﾞ

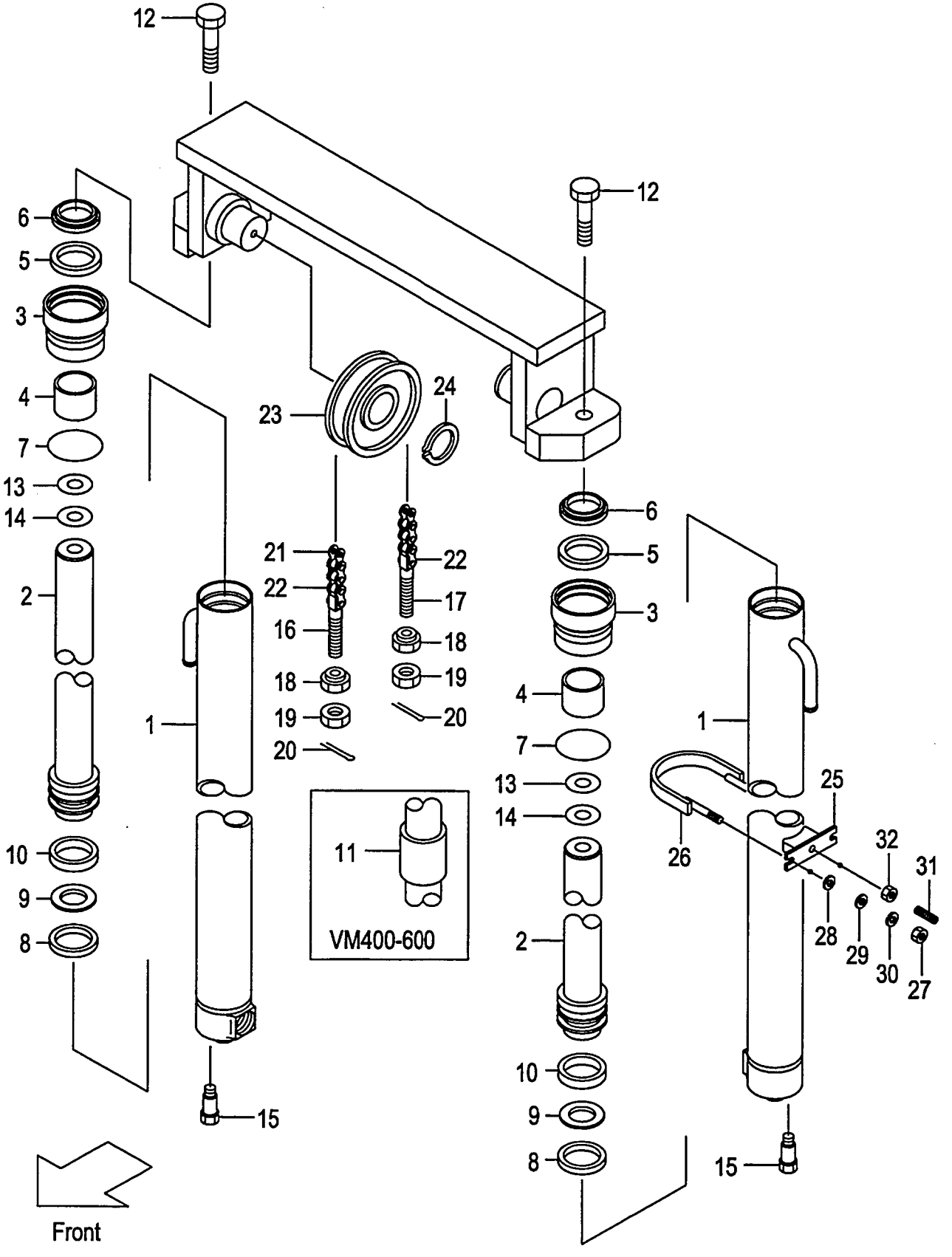

A:VM18J(1.8T)

Item No	Part No.	Mark	Description		Req'd	Remarks : Serial No.
-	218G8-46611		CHAIN VM450	チェーン	2	
-	218G8-46691		CHAIN VM475	チェーン	2	
-	218G8-46771		CHAIN VM500	チェーン	2	
-	218G8-46971		CHAIN VM550	チェーン	2	
-	218G8-47111		CHAIN VM600	チェーン	2	
-	09001-08051		CHAIN VM200	チェーン	2	[FC][FCS35][FCS45][FCS55]
-	09001-08055		CHAIN VM225	チェーン	2	[FC][FCS35][FCS45][FCS55]
-	09001-08061		CHAIN VM250	チェーン	2	[FC][FCS35][FCS45][FCS55]
-	09001-08065		CHAIN VM270	チェーン	2	[FC][FCS35][FCS45][FCS55]
-	09001-08065		CHAIN VM275	チェーン	2	[FC][FCS35][FCS45][FCS55]
-	09001-08071		CHAIN VM300	チェーン	2	[FC][FCS35][FCS45][FCS55]
-	09001-08075		CHAIN VM325	チェーン	2	[FC][FCS35][FCS45][FCS55]
-	09001-08077		CHAIN VM330	チェーン	2	[FC][FCS35][FCS45][FCS55]
-	09001-08081		CHAIN VM350	チェーン	2	[FC][FCS35][FCS45][FCS55]
-	09001-08083		CHAIN VM366	チェーン	2	[FC][FCS35][FCS45][FCS55]
-	09001-08085		CHAIN VM370	チェーン	2	[FC][FCS35][FCS45][FCS55]
-	09001-08085		CHAIN VM375	チェーン	2	[FC][FCS35][FCS45][FCS55]
-	09001-08093		CHAIN VM400	チェーン	2	[FC][FCS35][FCS45][FCS55]
-	09001-08097		CHAIN VM425	チェーン	2	[FC][FCS35][FCS45][FCS55]
-	09001-08103		CHAIN VM450	チェーン	2	[FC][FCS35][FCS45][FCS55]
-	09001-08107		CHAIN VM475	チェーン	2	[FC][FCS35][FCS45][FCS55]
-	09001-08113		CHAIN VM500	チェーン	2	[FC][FCS35][FCS45][FCS55]
-	09001-08123		CHAIN VM550	チェーン	2	[FC][FCS35][FCS45][FCS55]
-	09001-08133		CHAIN VM600	チェーン	2	[FC][FCS35][FCS45][FCS55]
22	218G8-42701		LINK	リンク	2	
23	216G8-42031		SHEAVE	シーブ	2	
-	516G3-74001		SHEAVE	シーブ	2	[FC][FCS35][FCS45][FCS55]
24	02100-00035		RING,SNAP	スナップリング	2	
-	02100-00035		RING,SNAP	スナップリング	2	[FC][FCS35][FCS45][FCS55]
25	280B8-42031		SUPPORT	サポート	2	
26	280B8-42001		U-BOLT	Uボルト	2	
27	278R0-63151		NUT	ナット	4	
28	02000-00010		WASHER	ワッシャ	4	
29	02000-00008		WASHER	ワッシャ	4	
30	02010-00008		WASHER	ワッシャ	4	
31	215E8-42241		PLUG	プラグ	2	
32	234A8-42571		NUT	ナット	2	
K1	B-3045A-00020		KIT,REPAIR	リペアキット	2	INC.5-9
K2	B-3045B-00026		KIT,HEAD	ヘッドキット	2	INC.3,4

FIG.180 MAST PIPING [VM18J]

(M5018440) マストパイピング

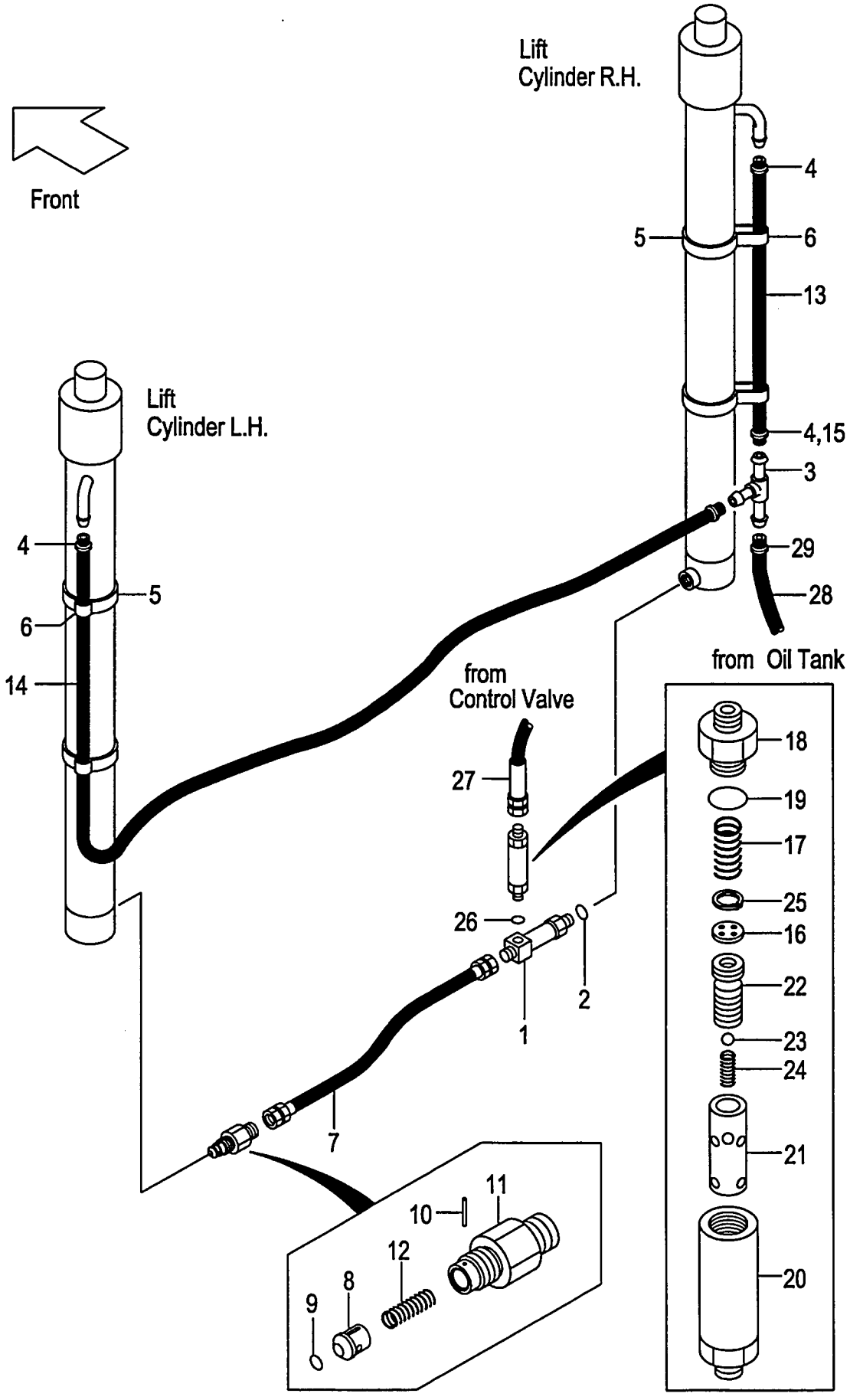

A:VM18J(1.8T)

Item No	Part No.	Mark	Description		Req'd	Remarks : Serial No.
1	234A8-43051		THREE-WAY	ｽﾘｰｳｪｲ	1	
2	03320-00140		O-RING	Oﾘﾝｸﾞ	1	
3	23679-45051		THREE-WAY	ｽﾘｰｳｪｲ	1	
-	53675-55051		THREE-WAY	ｽﾘｰｳｪｲ	1	[FC][RTL]
4	04911-00018		CLIP	ｸﾘｯﾌﾟ	4	
-	24329-46201		CLIP	ｸﾘｯﾌﾟ	2	[FC][RTL]
5	04913-21380		BAND	ﾊﾞﾝﾄﾞ	4	
6	23678-42401		BAND,HOSE	ﾊﾞﾝﾄﾞ	4	
-	53675-54101		BAND	ﾊﾞﾝﾄﾞ	4	[FC][RTL]
7	216G8-43501		HOSE	ﾎｰｽ	1	
A1	216G0-93201		VALVE-ASSY,CUT	ｶｯﾄﾊﾞﾙﾌﾞｱｯｾﾝ	1	INC.8-12
8	216G0-93211		PISTON	ﾋﾟｽﾄﾝ	1	
9	03320-00140		O-RING	Oﾘﾝｸﾞ	1	
10	02270-01014		PIN	ﾋﾟﾝ	1	
11	234A8-42621		NIPPLE	ﾆｯﾌﾟﾙ	1	
12	234A8-42611		SPRING	ｽﾌﾟﾘﾝｸﾞ	1	
13	23678-40075		HOSE VM200	ﾎｰｽ	1	
-	23678-40085		HOSE VM225	ﾎｰｽ	1	
-	23678-40100		HOSE VM250	ﾎｰｽ	1	
-	23678-40110		HOSE VM270,VM275	ﾎｰｽ	1	
-	23678-40125		HOSE VM300	ﾎｰｽ	1	
-	23678-40135		HOSE VM325	ﾎｰｽ	1	
-	23678-40140		HOSE VM330	ﾎｰｽ	1	
-	23678-40150		HOSE VM350	ﾎｰｽ	1	
-	23678-40160		HOSE VM366-375	ﾎｰｽ	1	
-	23678-40180		HOSE VM400	ﾎｰｽ	1	
-	23678-40190		HOSE VM425	ﾎｰｽ	1	
-	23678-40205		HOSE VM450	ﾎｰｽ	1	
-	23678-40215		HOSE VM475	ﾎｰｽ	1	
-	23678-40230		HOSE VM500	ﾎｰｽ	1	
-	23678-40260		HOSE VM550	ﾎｰｽ	1	
-	23678-40285		HOSE VM600	ﾎｰｽ	1	
-	04710-04075		HOSE VM200	ﾎｰｽ	1	[FC][RTL]
-	04710-04085		HOSE VM225	ﾎｰｽ	1	[FC][RTL]
-	04710-04100		HOSE VM250	ﾎｰｽ	1	[FC][RTL]
-	04710-04110		HOSE VM270	ﾎｰｽ	1	[FC][RTL]
-	04710-04110		HOSE VM275	ﾎｰｽ	1	[FC][RTL]
-	04710-04125		HOSE VM300	ﾎｰｽ	1	[FC][RTL]
-	04710-04135		HOSE VM325	ﾎｰｽ	1	[FC][RTL]
-	04710-04140		HOSE VM330	ﾎｰｽ	1	[FC][RTL]
-	04710-04150		HOSE VM350	ﾎｰｽ	1	[FC][RTL]
-	04710-04160		HOSE VM366	ﾎｰｽ	1	[FC][RTL]
-	04710-04160		HOSE VM370	ﾎｰｽ	1	[FC][RTL]
-	04710-04160		HOSE VM375	ﾎｰｽ	1	[FC][RTL]
-	04710-04180		HOSE VM400	ﾎｰｽ	1	[FC][RTL]
-	04710-04190		HOSE VM425	ﾎｰｽ	1	[FC][RTL]
-	04710-04205		HOSE VM450	ﾎｰｽ	1	[FC][RTL]
-	04710-04215		HOSE VM475	ﾎｰｽ	1	[FC][RTL]
-	04710-04230		HOSE VM500	ﾎｰｽ	1	[FC][RTL]
-	04710-04260		HOSE VM550	ﾎｰｽ	1	[FC][RTL]

FIG.180 MAST PIPING [VM18J]

(M5018440) マストパイピング

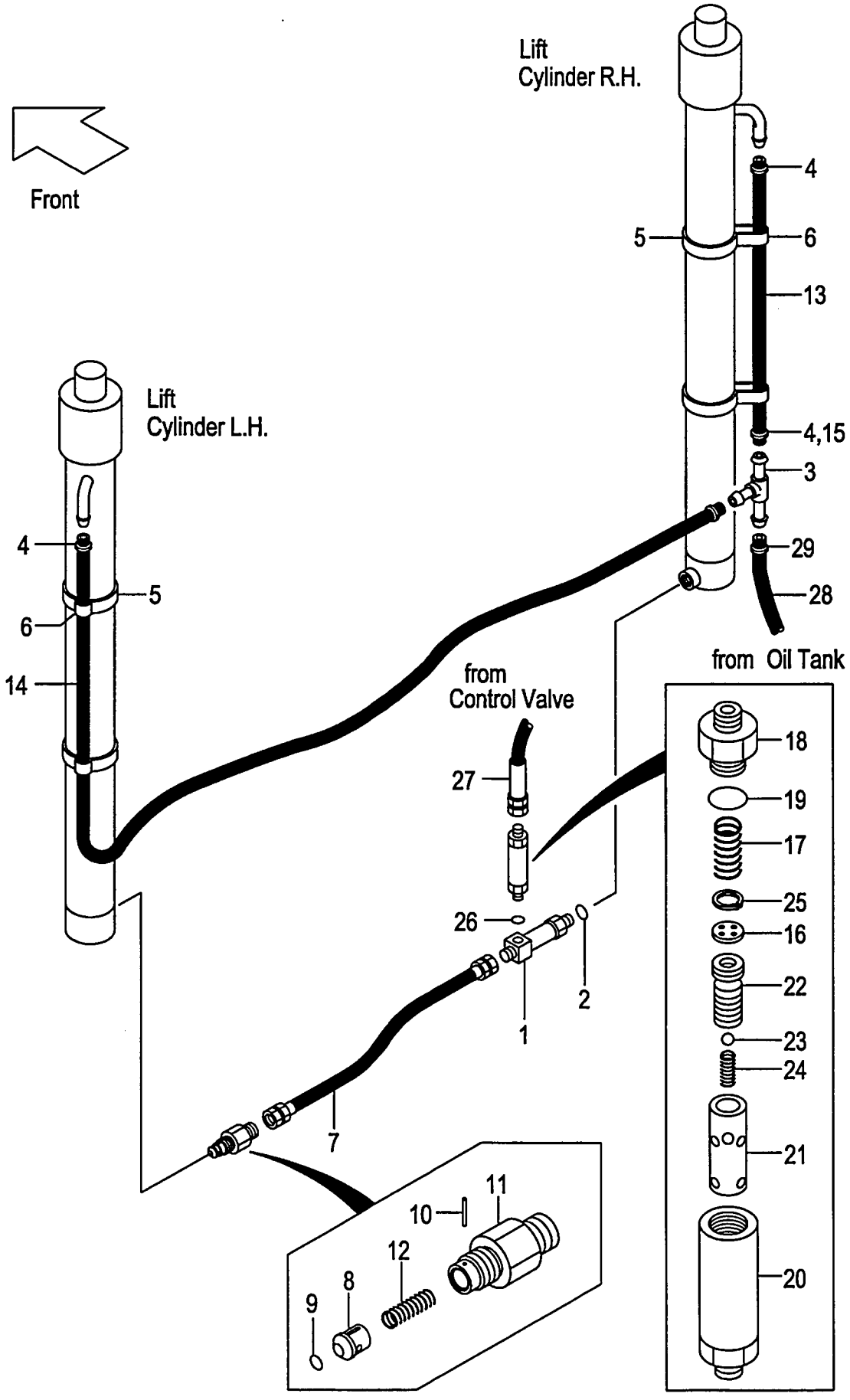

A:VM18J(1.8T)

Item No	Part No.	Mark	Description		Req'd	Remarks : Serial No.
-	04710-04285		HOSE VM600	ホース	1	[FC][RTL]
14	23678-40130		HOSE VM200	ホース	1	
-	23678-40140		HOSE VM225	ホース	1	
-	23678-40155		HOSE VM250	ホース	1	
-	23678-40165		HOSE VM270,VM275	ホース	1	
-	23678-40175		HOSE VM300	ホース	1	
-	23678-40190		HOSE VM325	ホース	1	
-	23678-40195		HOSE VM330	ホース	1	
-	23678-40205		HOSE VM350	ホース	1	
-	23678-40215		HOSE VM366-375	ホース	1	
-	23678-40235		HOSE VM400	ホース	1	
-	23678-40245		HOSE VM425	ホース	1	
-	23678-40260		HOSE VM450	ホース	1	
-	23678-40270		HOSE VM475	ホース	1	
-	23678-40285		HOSE VM500	ホース	1	
-	23678-40315		HOSE VM550	ホース	1	
-	23678-40340		HOSE VM600	ホース	1	
-	04710-04130		HOSE VM200	ホース	1	[FC][RTL]
-	04710-04140		HOSE VM225	ホース	1	[FC][RTL]
-	04710-04155		HOSE VM250	ホース	1	[FC][RTL]
-	04710-04165		HOSE VM270	ホース	1	[FC][RTL]
-	04710-04165		HOSE VM275	ホース	1	[FC][RTL]
-	04710-04175		HOSE VM300	ホース	1	[FC][RTL]
-	04710-04190		HOSE VM325	ホース	1	[FC][RTL]
-	04710-04195		HOSE VM330	ホース	1	[FC][RTL]
-	04710-04205		HOSE VM350	ホース	1	[FC][RTL]
-	04710-04215		HOSE VM366	ホース	1	[FC][RTL]
-	04710-04215		HOSE VM370	ホース	1	[FC][RTL]
-	04710-04215		HOSE VM375	ホース	1	[FC][RTL]
-	04710-04235		HOSE VM400	ホース	1	[FC][RTL]
-	04710-04245		HOSE VM425	ホース	1	[FC][RTL]
-	04710-04260		HOSE VM450	ホース	1	[FC][RTL]
-	04710-04270		HOSE VM475	ホース	1	[FC][RTL]
-	04710-04285		HOSE VM500	ホース	1	[FC][RTL]
-	04710-04315		HOSE VM550	ホース	1	[FC][RTL]
-	04710-04340		HOSE VM600	ホース	1	[FC][RTL]
15	04911-00021		CLIP	クリップ゛	2	[FC][RTL]
A2	216G8-41001		REGULATOR-ASSY	レギ゛ュレータアッセン	1	INC.16-25
16	210F8-43031		PLATE	プ゛レート	1	
17	27979-43101		SPRING	スプ゛リング゛	1	
18	216G8-42121		NIPPLE	ニップ゛ル	1	
19	03300-00280		O-RING	Oリング゛	1	
20	214A8-43011		CASE	ケース	1	
21	216G8-42111		SLEEVE	スリーブ゛	1	
22	24459-42921		PISTON	ピ゛ストン	1	
23	24459-42951		BALL,NYLON	ボ゛ール	1	
24	214A8-44151		SPRING	スプ゛リング゛	1	
25	02110-00018		RING,SNAP	スナップ゛リング゛	1	
26	03320-00180		O-RING	Oリング゛	1	
27	216G8-02502		HOSE	ホース	1	

FIG.180 MAST PIPING [VM18J]

(M5018440) マストパイピング

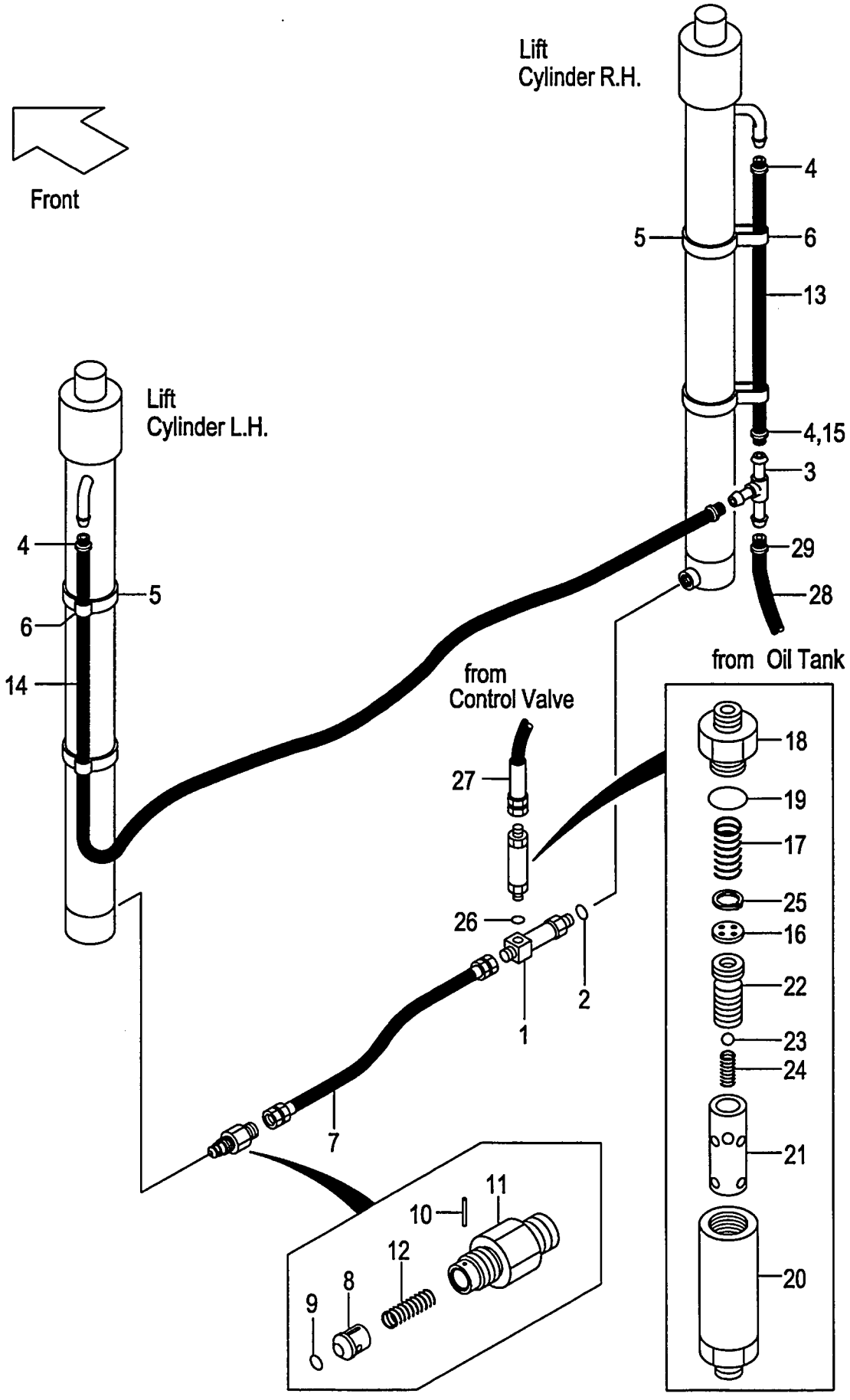

A:VM18J(1.8T)

Item No	Part No.	Mark	Description		Req'd	Remarks : Serial No.
-	216G8-02502		HOSE	ホース	1	[FC][RTL]
28	23678-40095		HOSE	ホース	1	
-	04710-04110		HOSE	ホース	1	[FC][RTL]
29	04911-00018		CLIP	クリップ゜	1	
-	04914-00016		CLIP,TANK SIDE	クリップ゜	1	
-	04911-00021		CLIP	クリップ゜	2	[FC][RTL]

FIG.181 FORK [VFM18G]

(M5018130) フォーク

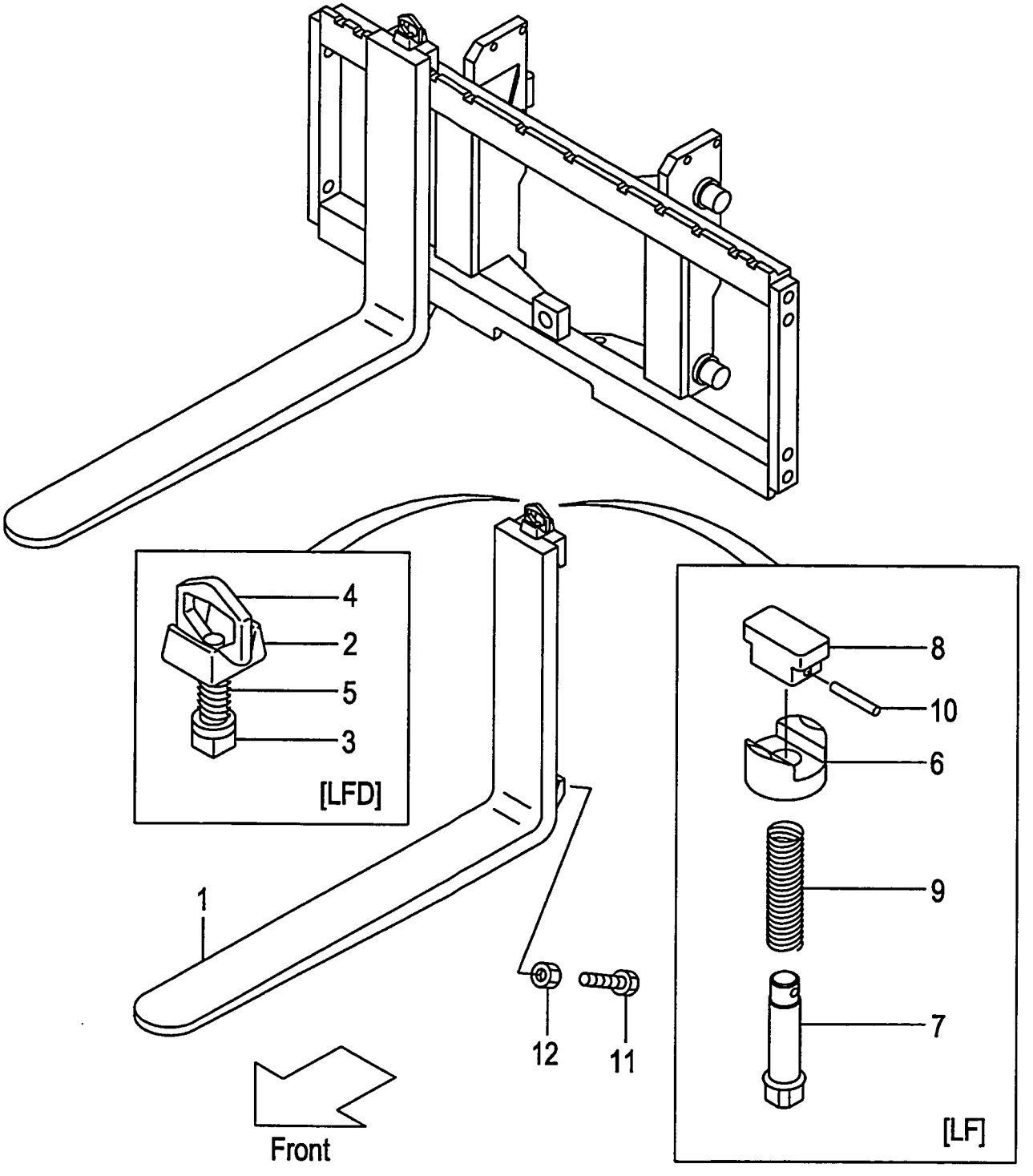

A:VFM18G(1T)
B:VFM18G(1.5T)
C:VFM18G(1.8T)

FIG.181
(M5018130)

Item No	Part No.	Mark	Description	Req'd	Remarks : Serial No.
1	210B8-10502		FORK フォーク	2	A (L=770) INC.6-10
-	210F8-10512		FORK フォーク	2	B,C (L=920) INC.6-10
-	210F8-10512		FORK フォーク	2	[EX](L=920) INC.6-10
-	210B8-10502		FORK フォーク	2	A [LF077] INC.6-10
-	210B8-10512		FORK フォーク	2	A [LF085] INC.6-10
-	210F8-10502		FORK フォーク	2	B,C [LF085] INC.6-10
-	210F8-10572		FORK フォーク	2	[LF090] INC.6-10
-	210B8-10522		FORK フォーク	2	A [LF092] INC.6-10
-	210F8-10512		FORK フォーク	2	B,C [LF092] INC.6-10
-	210F8-10582		FORK フォーク	2	[LF100] INC.6-10
-	210F8-10522		FORK フォーク	2	[LF107] INC.6-10
-	210F8-10592		FORK フォーク	2	[LF110] INC.6-10
-	210F8-10602		FORK フォーク	2	[LF120] INC.6-10
-	210F8-10532		FORK フォーク	2	[LF122] INC.6-10
-	210F8-10612		FORK フォーク	2	[LF130] INC.6-10
-	210H8-10532		FORK フォーク	2	[LF137] INC.6-10
-	210H8-10622		FORK フォーク	2	[LF140] INC.6-10
-	210H8-10632		FORK フォーク	2	[LF150] INC.6-10
-	210H8-10542		FORK フォーク	2	[LF152] INC.6-10
-	210H8-10642		FORK フォーク	2	[LF160] INC.6-10
-	210H8-10552		FORK フォーク	2	B,C [LF167] INC.6-10
-	216B8-10301		FORK フォーク	2	A [LFD077] INC.2-5
-	216B8-10311		FORK フォーク	2	A [LFD085] INC.2-5
-	216G8-10301		FORK フォーク	2	B [LFD085] INC.2-5
-	216K8-10361		FORK フォーク	2	C [LFD085] INC.2-5
-	216G8-10371		FORK フォーク	2	A,B [LFD090] INC.2-5
-	216K8-10371		FORK フォーク	2	C [LFD090] INC.2-5
-	216B8-10321		FORK フォーク	2	A [LFD092] INC.2-5
-	216G8-10311		FORK フォーク	2	B [LFD092] INC.2-5
-	216K8-10301		FORK フォーク	2	C [LFD092] INC.2-5
-	216G8-10381		FORK フォーク	2	A,B [LFD100] INC.2-5

FIG.181 FORK [VFM18G]

(M5018130) フォーク

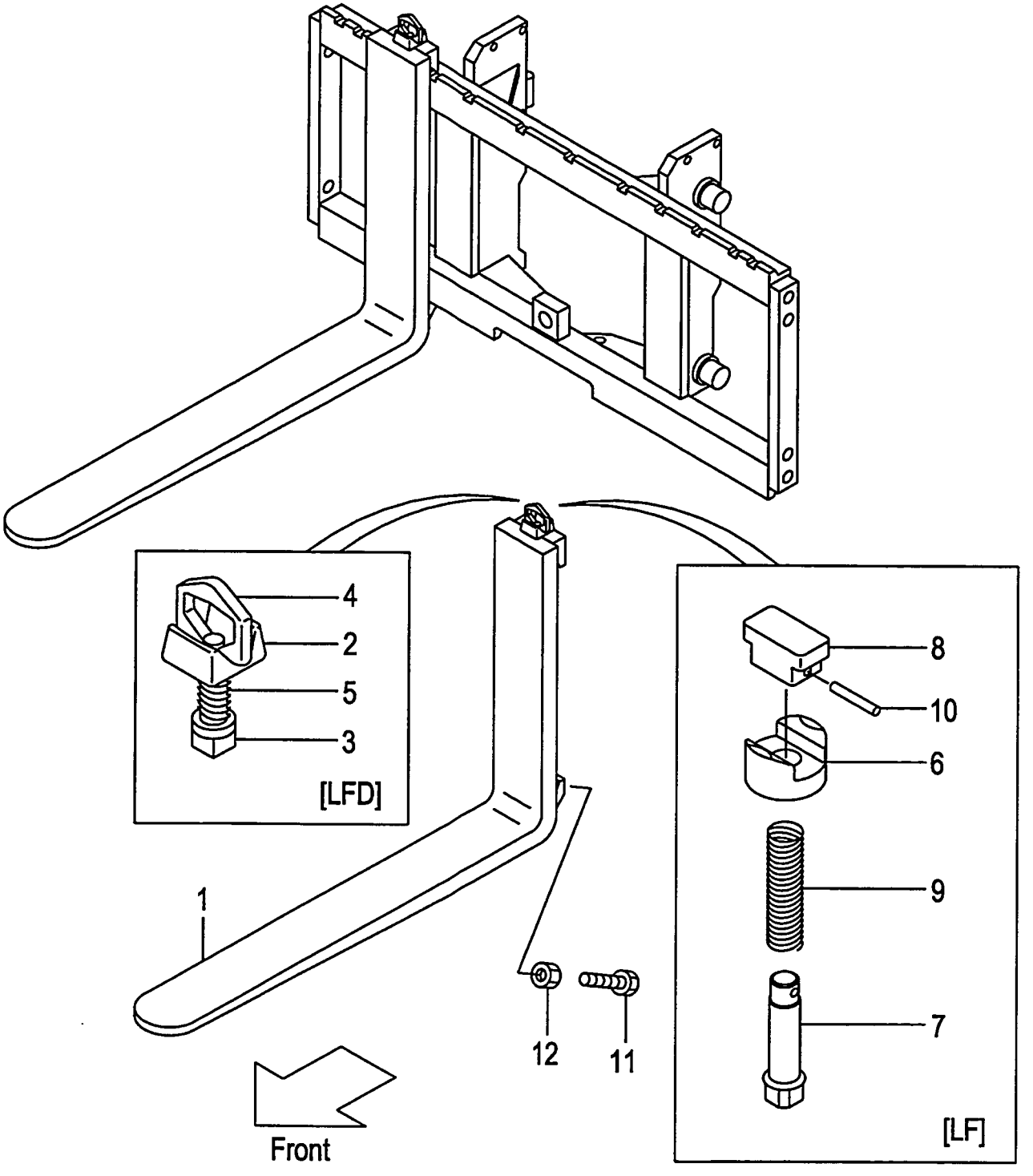

A:VFM18G(1T)
B:VFM18G(1.5T)
C:VFM18G(1.8T)

FIG.181
(M5018130)

Item No	Part No.	Mark	Description		Req'd	Remarks : Serial No.
-	216K8-10381		FORK	ﾌｫｰｸ	2	C [LFD100] INC.2-5
-	216G8-10321		FORK	ﾌｫｰｸ	2	A,B [LFD107] INC.2-5
-	216K8-10311		FORK	ﾌｫｰｸ	2	C [LFD107] INC.2-5
-	216G8-10391		FORK	ﾌｫｰｸ	2	A,B [LFD110] INC.2-5
-	216K8-10391		FORK	ﾌｫｰｸ	2	C [LFD110] INC.2-5
-	216G8-10401		FORK	ﾌｫｰｸ	2	A,B [LFD120] INC.2-5
-	216K8-10401		FORK	ﾌｫｰｸ	2	C [LFD120] INC.2-5
-	216G8-10331		FORK	ﾌｫｰｸ	2	A,B [LFD122] INC.2-5
-	216K8-10321		FORK	ﾌｫｰｸ	2	C [LFD122] INC.2-5
-	216G8-10411		FORK	ﾌｫｰｸ	2	A,B [LFD130] INC.2-5
-	216K8-10411		FORK	ﾌｫｰｸ	2	C [LFD130] INC.2-5
-	216G8-10341		FORK	ﾌｫｰｸ	2	A,B [LFD137] INC.2-5
-	216K8-10331		FORK	ﾌｫｰｸ	2	C [LFD137] INC.2-5
-	216G8-10421		FORK	ﾌｫｰｸ	2	A,B [LFD140] INC.2-5
-	216K8-10421		FORK	ﾌｫｰｸ	2	C [LFD140] INC.2-5
-	216G8-10431		FORK	ﾌｫｰｸ	2	A,B [LFD150] INC.2-5
-	216K8-10431		FORK	ﾌｫｰｸ	2	C [LFD150] INC.2-5
-	216G8-10351		FORK	ﾌｫｰｸ	2	A,B [LFD152] INC.2-5
-	216K8-10341		FORK	ﾌｫｰｸ	2	C [LFD152] INC.2-5
-	216G8-10441		FORK	ﾌｫｰｸ	2	A,B [LFD160] INC.2-5
-	216K8-10441		FORK	ﾌｫｰｸ	2	C [LFD160] INC.2-5
-	216G8-10361		FORK	ﾌｫｰｸ	2	B [LFD167] INC.2-5
-	216K8-10351		FORK	ﾌｫｰｸ	2	C [LFD167] INC.2-5
A1	214A8-11001		STOPPER-ASSY	ｽﾄｯﾊﾟｱｯｾﾝ	2	[LFD] INC.2-5
2	214A8-12001		HEAD	ﾍｯﾄﾞ	2	[LFD]
3	214A8-12011		STOPPER	ｽﾄｯﾊﾟ	2	[LFD]
4	214A8-12021		HANDLE	ﾊﾝﾄﾞﾙ	2	[LFD]

FIG.181 FORK [VFM18G]

(M5018130) フォーク

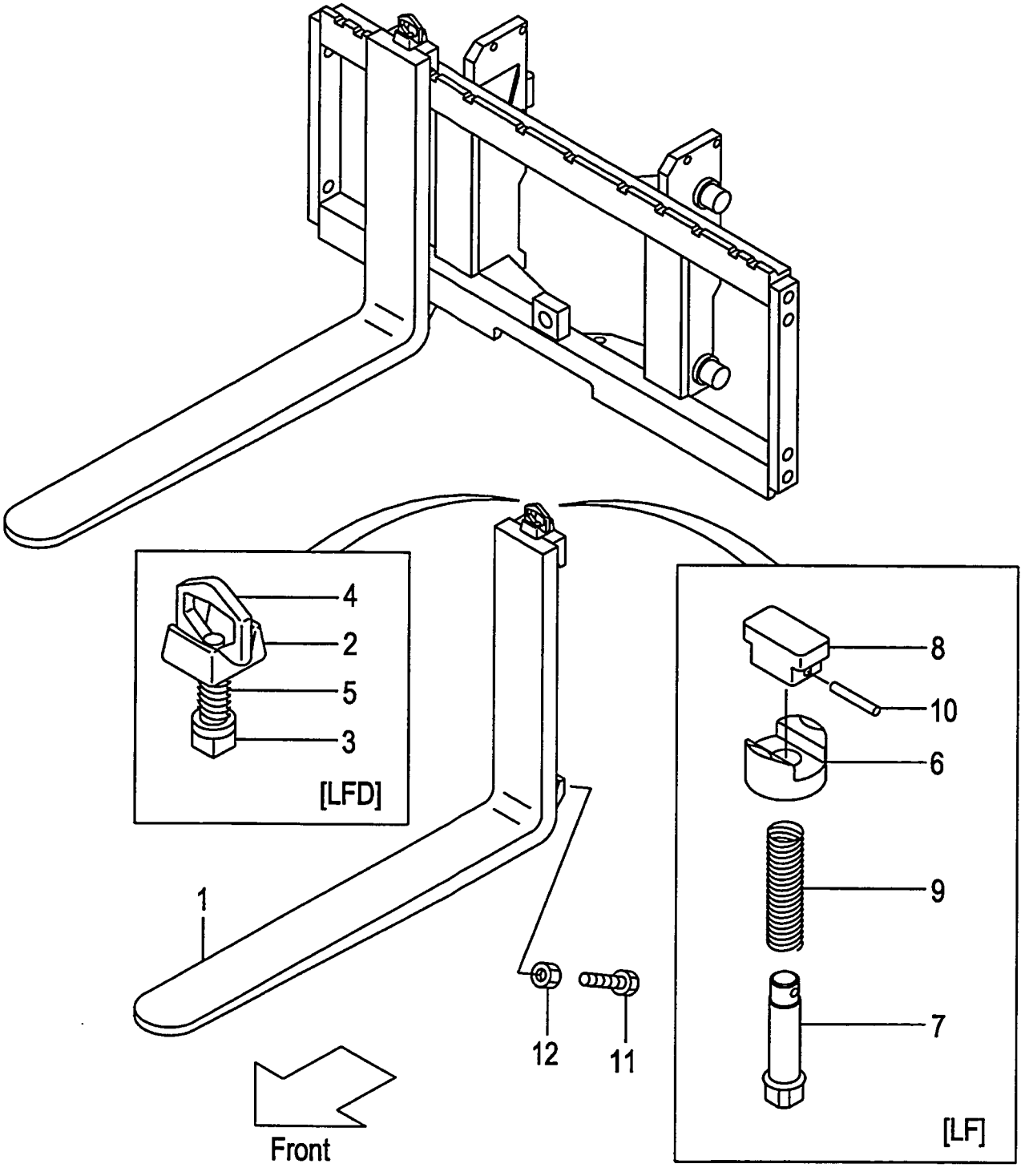

A:VFM18G(1T)
B:VFM18G(1.5T)
C:VFM18G(1.8T)

FIG.181
(M5018130)

Item No	Part No.	Mark	Description		Req'd	Remarks : Serial No.
5	214A8-12031		SPRING	ｽﾌﾟﾘﾝｸﾞ	2	[LFD]
6	216G8-12921		HOLDER	ﾎﾙﾀﾞ	2	[LF]
7	231A8-12001		PIN	ﾋﾟﾝ	2	[LF]
8	231A8-12011		KNOB	ﾉﾌﾞ	2	[LF]
9	231A8-12021		SPRING	ｽﾌﾟﾘﾝｸﾞ	2	[LF]
10	231A8-12031		PIN,SPRING	ﾋﾟﾝ	2	[LF]
11	216G8-12101		BOLT	ﾎﾞﾙﾄ	4	[LFD]
12	01402-00010		NUT	ﾅｯﾄ	4	[LFD]

FIG.182 LIFT BRACKET [VFM18G]

(M5010610) ﾘﾌﾄﾌﾞﾗｹｯﾄ

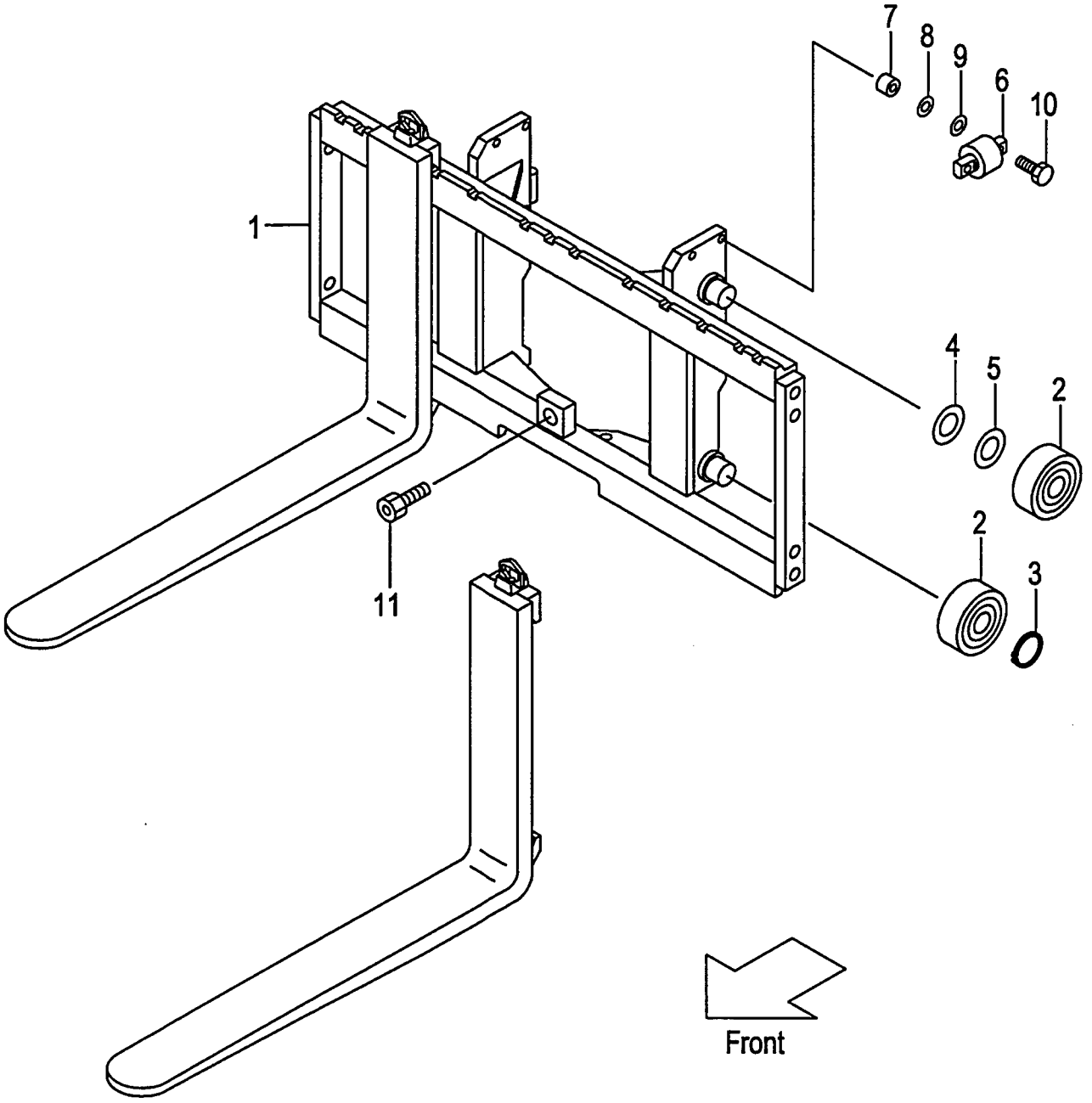

A:VFM18G(1T)
B:VFM18G(1.5T)
C:VFM18G(1.8T)

FIG.182
(M5010610)

Item No	Part No.	Mark	Description		Req'd	Remarks : Serial No.
1	218G0-60101		BRACKET,LIFT	ﾌﾞﾗｹｯﾄ	1	
-	518G1-61301		BRACKET,LIFT	ﾌﾞﾗｹｯﾄ	1	[WFX110][WFX114][WFX127] [WFX135][WFX138]
-	518G1-61401		BRACKET,LIFT	ﾌﾞﾗｹｯﾄ	1	[WFX135][WFX138][WFX145] [WFX146][WFX154][WFX180]
2	211F8-22201		ROLLER,END,102.0	ﾛｰﾗ	4	
-	211F8-22211		ROLLER,END,102.5	ﾛｰﾗ	(4)	
-	511F3-74021		ROLLER,END,102.0	ﾛｰﾗ	4	[FC][CS35][FCS35][FCS55] [FCS45]
-	511F3-74031		ROLLER,END,102.5	ﾛｰﾗ	(4)	[FC][CS35][FCS35][FCS55] [FCS45]
3	02100-00035		RING,SNAP	ｽﾅｯﾌﾟﾘﾝｸﾞ	2	
4	211F8-22261		SHIM,T-0.5	ｼﾑ	4	
5	211F8-22271		SHIM,T-1.0	ｼﾑ	8	
6	22018-30304		ROLLER,SIDE	ﾛｰﾗ	2	
-	510F3-74001		ROLLER,SIDE	ﾛｰﾗ	2	[FC][CS35][FCS35][FCS55] [FCS45]
7	22578-32841		SPACER	ｽﾍﾟｰｻ	4	
8	22018-30261		SHIM	ｼﾑ	8	
9	22018-30121		SHIM	ｼﾑ	4	
10	01103-10050		BOLT & WASHER	ﾎﾞﾙﾄ & ﾜｯｼｬ	4	
11	01184-12025		BOLT & WASHER	ﾎﾞﾙﾄ & ﾜｯｼｬ	1	

FIG.183 BACKREST [VFM18G]

(M5018250) ﾊﾞｯｸﾚｽﾄ

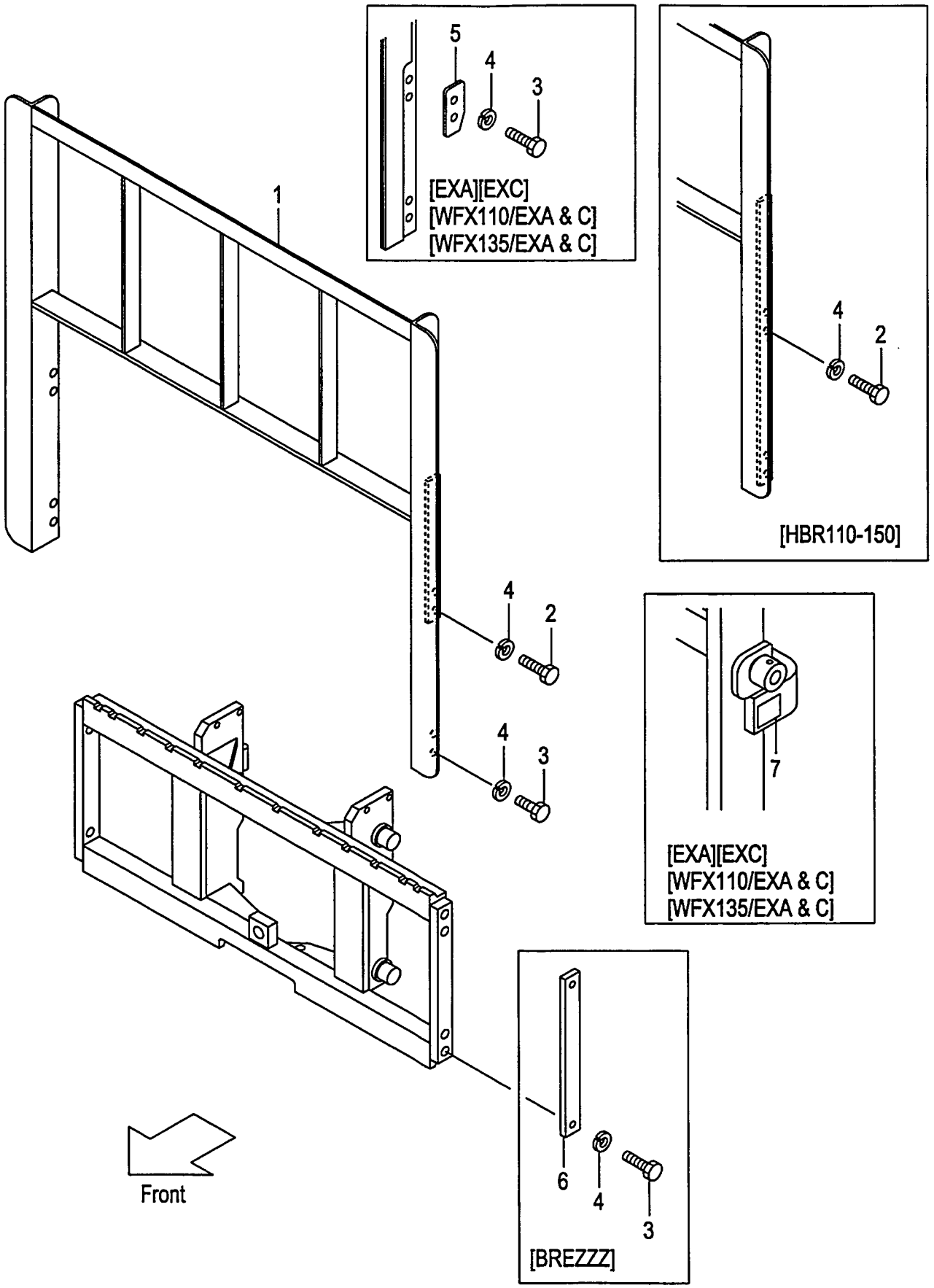

A:VFM18G(1T)
B:VFM18G(1.5T)
C:VFM18G(1.8T)

FIG.183
(M5018250)

Item No	Part No.	Mark	Description		Req'd	Remarks : Serial No.
1	216G8-22201		BACKREST	ﾊﾞｯｸﾚｽﾄ	1	
-	516G2-74301		BACKREST	ﾊﾞｯｸﾚｽﾄ	1	[EXA][EXC][HBR048]
-	216G8-22301		BACKREST	ﾊﾞｯｸﾚｽﾄ	1	[HBR110]
-	216G8-22311		BACKREST	ﾊﾞｯｸﾚｽﾄ	1	[HBR120]
-	216G8-22321		BACKREST	ﾊﾞｯｸﾚｽﾄ	1	[HBR130]
-	216G8-22331		BACKREST	ﾊﾞｯｸﾚｽﾄ	1	[HBR140]
-	216G8-22341		BACKREST	ﾊﾞｯｸﾚｽﾄ	1	[HBR150]
-	516G1-64301		BACKREST	ﾊﾞｯｸﾚｽﾄ	1	[WFX110]
-	516G1-64351		BACKREST	ﾊﾞｯｸﾚｽﾄ	1	[WFX135]
-	516G2-74101		BACKREST	ﾊﾞｯｸﾚｽﾄ	1	[WFX110/EXA][WFX110/EXC]
-	516G2-74201		BACKREST	ﾊﾞｯｸﾚｽﾄ	1	[WFX135/EXA][WFX135/EXC]
2	01100-14030		BOLT	ﾎﾞﾙﾄ	4	(WITHOUT BREZZZ)
-	01100-14035		BOLT	ﾎﾞﾙﾄ	4	[EXA][EXC][HBR048]
						[WFX110/EXA&C][WFX135/EXA&C]
-	01100-14030		BOLT	ﾎﾞﾙﾄ	8	[HBR110-150]
3	01100-14025		BOLT	ﾎﾞﾙﾄ	4	(WITHOUT HBR110-150)
4	02010-00014		WASHER	ﾜｯｼｬ	8	
-	02010-00014		WASHER	ﾜｯｼｬ	4	[BREZZZ]
5	534A2-74051		PLATE,STOPPER	ﾌﾟﾚｰﾄ	2	[EXA][EXC][HBR048]
						[WFX110/EXA&C][WFX135/EXA&C]
6	23659-42161		PLATE	ﾌﾟﾚｰﾄ	2	[BREZZZ]
7	534A2-74301		DECAL,CAUTION	ﾃﾞｶﾙ	1	[EXA][EXC][HBR048]
						[WFX110/EXA&C][WFX135/EXA&C]

FIG.184 MAST [VFM18G]

(M5010410) マスト

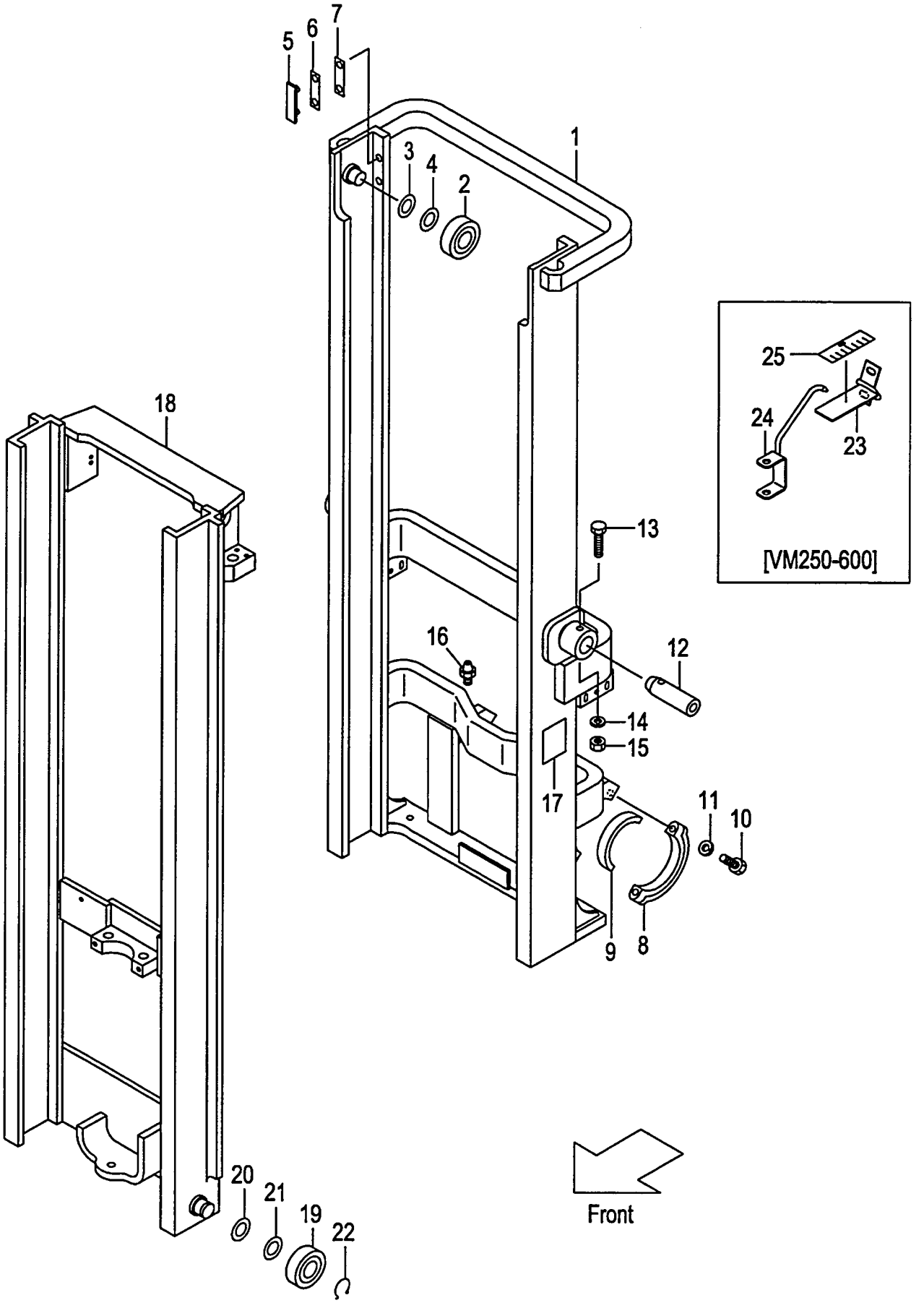

A:VFM18G(1T)
B:VFM18G(1.5T)
C:VFM18G(1.8T)

FIG.184
(M5010410)

Item No	Part No.	Mark	Description		Req'd	Remarks : Serial No.
1	218G0-40211		MAST,OUTER VFM200	ｱｳﾀﾏｽﾄ	1	
-	218G0-40221		MAST,OUTER VFM225	ｱｳﾀﾏｽﾄ	1	
-	218G0-40231		MAST,OUTER VFM250	ｱｳﾀﾏｽﾄ	1	
-	218G0-40241		MAST,OUTER VFM270	ｱｳﾀﾏｽﾄ	1	
-	218G0-40251		MAST,OUTER VFM275	ｱｳﾀﾏｽﾄ	1	
-	218G0-40201		MAST,OUTER VFM300	ｱｳﾀﾏｽﾄ	1	
-	218G0-40261		MAST,OUTER VFM325	ｱｳﾀﾏｽﾄ	1	
-	218G0-40271		MAST,OUTER VFM330	ｱｳﾀﾏｽﾄ	1	
-	218G0-40281		MAST,OUTER VFM350	ｱｳﾀﾏｽﾄ	1	
-	218G0-40291		MAST,OUTER VFM366	ｱｳﾀﾏｽﾄ	1	
-	218G0-40301		MAST,OUTER VFM370	ｱｳﾀﾏｽﾄ	1	
-	218G0-40311		MAST,OUTER VFM375	ｱｳﾀﾏｽﾄ	1	
-	218G0-40321		MAST,OUTER VFM400	ｱｳﾀﾏｽﾄ	1	
-	218G0-40331		MAST,OUTER VFM425	ｱｳﾀﾏｽﾄ	1	
-	218G0-40341		MAST,OUTER VFM450	ｱｳﾀﾏｽﾄ	1	
-	218G0-40351		MAST,OUTER VFM475	ｱｳﾀﾏｽﾄ	1	
-	218G0-40361		MAST,OUTER VFM500	ｱｳﾀﾏｽﾄ	1	
-	218G0-40371		MAST,OUTER VFM550	ｱｳﾀﾏｽﾄ	1	
-	218G0-40381		MAST,OUTER VFM600	ｱｳﾀﾏｽﾄ	1	
-	518G3-91211		MAST,OUTER VFM200	ｱｳﾀﾏｽﾄ	1	[EXR][RW][HC]
-	518G3-91221		MAST,OUTER VFM225	ｱｳﾀﾏｽﾄ	1	[EXR][RW][HC]
-	518G3-91231		MAST,OUTER VFM250	ｱｳﾀﾏｽﾄ	1	[EXR][RW][HC]
-	518G3-91241		MAST,OUTER VFM270	ｱｳﾀﾏｽﾄ	1	[EXR][RW][HC]
-	518G3-91251		MAST,OUTER VFM275	ｱｳﾀﾏｽﾄ	1	[EXR][RW][HC]
-	518G3-91201		MAST,OUTER VFM300	ｱｳﾀﾏｽﾄ	1	[EXR][RW][HC]
-	518G3-91261		MAST,OUTER VFM325	ｱｳﾀﾏｽﾄ	1	[EXR][RW][HC]
-	518G3-91271		MAST,OUTER VFM330	ｱｳﾀﾏｽﾄ	1	[EXR][RW][HC]
-	518G3-91281		MAST,OUTER VFM350	ｱｳﾀﾏｽﾄ	1	[EXR][RW][HC]
-	518G3-91291		MAST,OUTER VFM366	ｱｳﾀﾏｽﾄ	1	[EXR][RW][HC]
-	518G3-91301		MAST,OUTER VFM370	ｱｳﾀﾏｽﾄ	1	[EXR][RW][HC]
-	518G3-91311		MAST,OUTER VFM375	ｱｳﾀﾏｽﾄ	1	[EXR][RW][HC]
-	518G3-91321		MAST,OUTER VFM400	ｱｳﾀﾏｽﾄ	1	[EXR][RW][HC]
-	518G3-91331		MAST,OUTER VFM425	ｱｳﾀﾏｽﾄ	1	[EXR][RW][HC]
-	518G3-91341		MAST,OUTER VFM450	ｱｳﾀﾏｽﾄ	1	[EXR][RW][HC]
-	518G3-91351		MAST,OUTER VFM475	ｱｳﾀﾏｽﾄ	1	[EXR][RW][HC]
-	518G3-91361		MAST,OUTER VFM500	ｱｳﾀﾏｽﾄ	1	[EXR][RW][HC]
-	518G3-91371		MAST,OUTER VFM550	ｱｳﾀﾏｽﾄ	1	[EXR][RW][HC]
-	518G3-91381		MAST,OUTER VFM600	ｱｳﾀﾏｽﾄ	1	[EXR][RW][HC]
2	211F8-22221		ROLLER,END,102.0	ﾛｰﾗ	2	
-	211F8-22231		ROLLER,END,102.5	ﾛｰﾗ	(2)	
-	511F3-74021		ROLLER,END,102.0	ﾛｰﾗ	2	[FC][CS35][FCS35][FCS55] [FCS45]
-	511F3-74031		ROLLER,END,102.5	ﾛｰﾗ	(2)	[FC][CS35][FCS35][FCS55] [FCS45]
3	211F8-22261		SHIM,T-0.5	ｼﾑ	4	
4	211F8-22271		SHIM,T-1.0	ｼﾑ	8	
5	216G8-33401		SLIPPER	ｽﾘｯﾊﾟ	2	
6	216G8-33361		SHIM,T-0.5	ｼﾑ	8	
7	216G8-33371		SHIM,T-1.0	ｼﾑ	4	
8	210F6-12441		CAP	ｷｬｯﾌﾟ	2	

FIG.184 MAST [VFM18G]

(M5010410) マスト

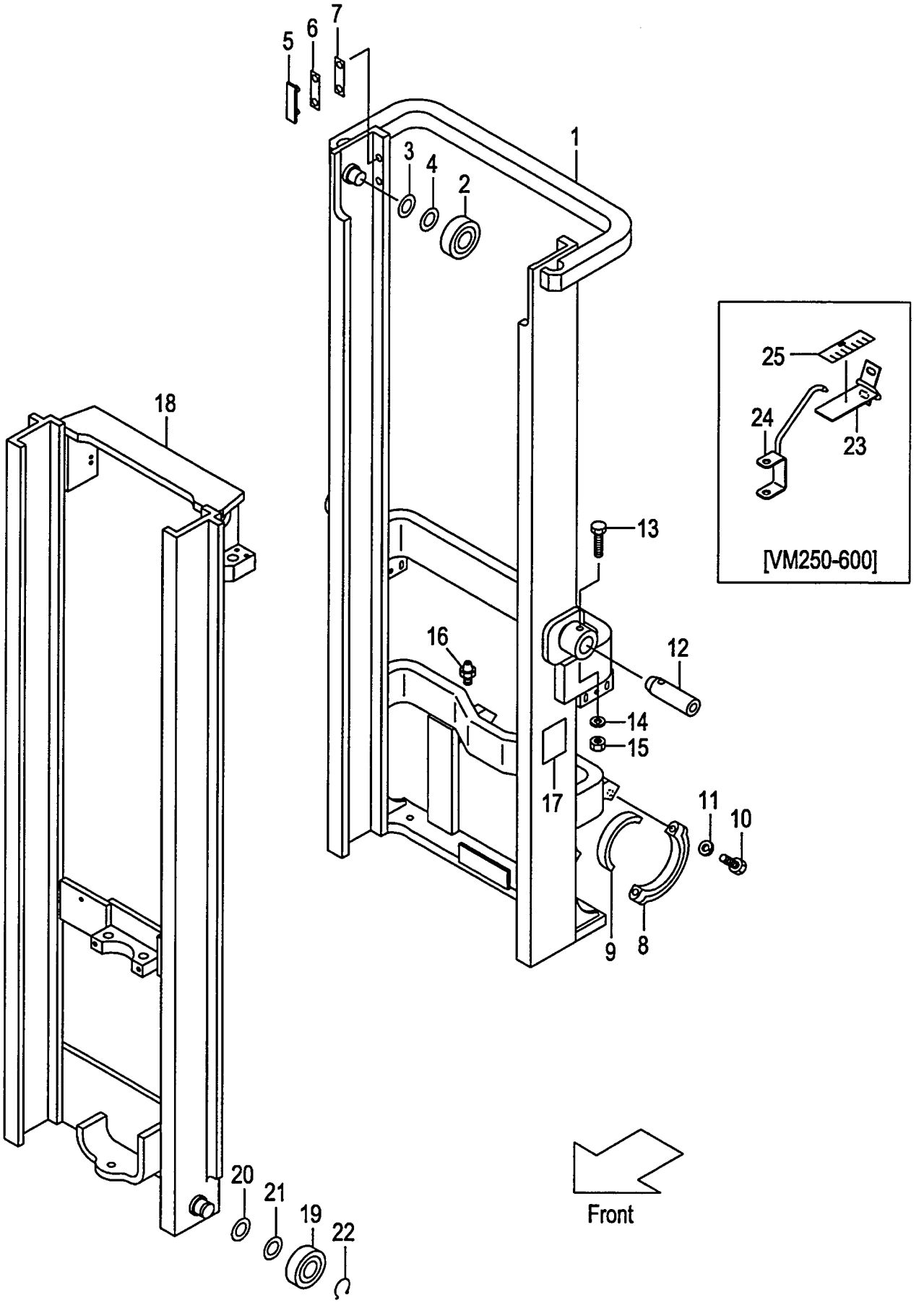

A:VFM18G(1T)
B:VFM18G(1.5T)
C:VFM18G(1.8T)

FIG.184
(M5010410)

Item No	Part No.	Mark	Description		Req'd	Remarks : Serial No.
9	216G8-02001		BUSHING	ﾌﾞｯｼﾝｸﾞ	2	
10	01100-14065		BOLT	ﾎﾞﾙﾄ	4	
11	02010-00014		WASHER	ﾜｯｼｬ	4	
12	210F8-02102		PIN	ﾋﾟﾝ	2	
13	216G8-52321		BOLT	ﾎﾞﾙﾄ	2	
14	02010-20012		WASHER	ﾜｯｼｬ	2	
15	234A8-42571		NUT	ﾅｯﾄ	2	
16	04901-00100		FITTING	ﾌｨｯﾃｨﾝｸﾞ	2	
17	23678-06002		PLATE,NAME	ﾌﾟﾚｰﾄ	1	
18	218G0-40411		MAST,INNER VFM200	ｲﾝﾅﾏｽﾄ	1	
-	218G0-40421		MAST,INNER VFM225	ｲﾝﾅﾏｽﾄ	1	
-	218G0-40431		MAST,INNER VFM250	ｲﾝﾅﾏｽﾄ	1	
-	218G0-40441		MAST,INNER VFM270	ｲﾝﾅﾏｽﾄ	1	
-	218G0-40451		MAST,INNER VFM275	ｲﾝﾅﾏｽﾄ	1	
-	218G0-40401		MAST,INNER VFM300	ｲﾝﾅﾏｽﾄ	1	
-	218G0-40461		MAST,INNER VFM325	ｲﾝﾅﾏｽﾄ	1	
-	218G0-40471		MAST,INNER VFM330	ｲﾝﾅﾏｽﾄ	1	
-	218G0-40481		MAST,INNER VFM350	ｲﾝﾅﾏｽﾄ	1	
-	218G0-40491		MAST,INNER VFM366	ｲﾝﾅﾏｽﾄ	1	
-	218G0-40501		MAST,INNER VFM370	ｲﾝﾅﾏｽﾄ	1	
-	218G0-40511		MAST,INNER VFM375	ｲﾝﾅﾏｽﾄ	1	
-	218G0-40521		MAST,INNER VFM400	ｲﾝﾅﾏｽﾄ	1	
-	218G0-40531		MAST,INNER VFM425	ｲﾝﾅﾏｽﾄ	1	
-	218G0-40541		MAST,INNER VFM450	ｲﾝﾅﾏｽﾄ	1	
-	218G0-40551		MAST,INNER VFM475	ｲﾝﾅﾏｽﾄ	1	
-	218G0-40561		MAST,INNER VFM500	ｲﾝﾅﾏｽﾄ	1	
-	218G0-40571		MAST,INNER VFM550	ｲﾝﾅﾏｽﾄ	1	
-	218G0-40581		MAST,INNER VFM600	ｲﾝﾅﾏｽﾄ	1	
19	211F8-22221		ROLLER,END,102.0	ﾛｰﾗ	2	
-	211F8-22231		ROLLER,END,102.5	ﾛｰﾗ	(2)	
-	511F3-74021		ROLLER,END,102.0	ﾛｰﾗ	2	[FC][CS35][FCS35][FCS55] [FCS45]
-	511F3-74031		ROLLER,END,102.5	ﾛｰﾗ	(2)	[FC][CS35][FCS35][FCS55] [FCS45]
20	211F8-22261		SHIM,T-0.5	ｼﾑ	4	
21	211F8-22271		SHIM,T-1.0	ｼﾑ	8	
22	09192-30035		RING,SNAP	ｽﾅｯﾌﾟﾘﾝｸﾞ	2	
23	636A0-10011		GAUGE	ｹﾞｰｼﾞ	1	[VFM250-600/(TG,PPC,PR)]
24	61170-10051		INDICATOR	ｲﾝｼﾞｹｰﾀ	1	[VFM250-600/(TG,PPC,PR)]
25	618G0-10051		SEAL	ｼｰﾙ	1	[VFM250-600/(TG,PPC,PR)]

FIG.185 LIFT CYLINDER(FRONT) [VFM18G]

(M5010510) リフトシリンダ(フロント)

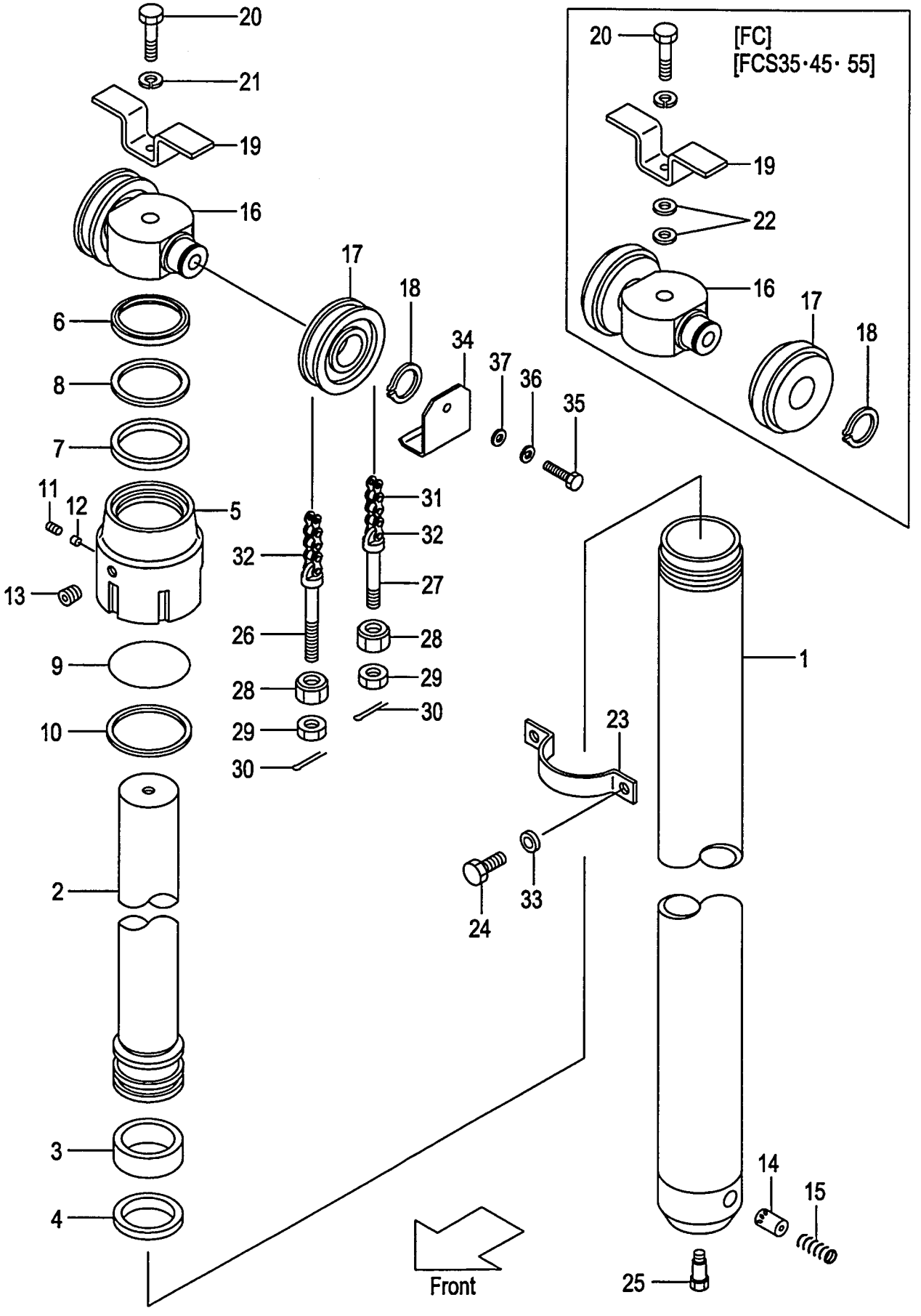

A:VFM18G(1T)
B:VFM18G(1.5T)
C:VFM18G(1.8T)

FIG.185
(M5010510)

Item No	Part No.	Mark	Description	Req'd	Remarks : Serial No.
A1	211F0-50111		CYL-ASSY,LIFT VFM200 ｼﾘﾝﾀﾞｱｯｾﾝ	1	INC.1-15
-	211F0-50121		CYL-ASSY,LIFT VFM225 ｼﾘﾝﾀﾞｱｯｾﾝ	1	INC.1-15
-	211F0-50131		CYL-ASSY,LIFT VFM250 ｼﾘﾝﾀﾞｱｯｾﾝ	1	INC.1-15
-	211F0-50141		CYL-ASSY,LIFT VFM270 ｼﾘﾝﾀﾞｱｯｾﾝ	1	INC.1-15
-	211F0-50151		CYL-ASSY,LIFT VFM275 ｼﾘﾝﾀﾞｱｯｾﾝ	1	INC.1-15
-	211F0-50101		CYL-ASSY,LIFT VFM300 ｼﾘﾝﾀﾞｱｯｾﾝ	1	INC.1-15
-	211F0-50161		CYL-ASSY,LIFT VFM325 ｼﾘﾝﾀﾞｱｯｾﾝ	1	INC.1-15
-	211F0-50171		CYL-ASSY,LIFT VFM330 ｼﾘﾝﾀﾞｱｯｾﾝ	1	INC.1-15
-	211F0-50181		CYL-ASSY,LIFT VFM350 ｼﾘﾝﾀﾞｱｯｾﾝ	1	INC.1-15
-	211F0-50191		CYL-ASSY,LIFT VFM366 ｼﾘﾝﾀﾞｱｯｾﾝ	1	INC.1-15
-	211F0-50201		CYL-ASSY,LIFT VFM370 ｼﾘﾝﾀﾞｱｯｾﾝ	1	INC.1-15
-	211F0-50211		CYL-ASSY,LIFT VFM375 ｼﾘﾝﾀﾞｱｯｾﾝ	1	INC.1-15
-	211F0-50221		CYL-ASSY,LIFT VFM400 ｼﾘﾝﾀﾞｱｯｾﾝ	1	INC.1-15
-	211F0-50231		CYL-ASSY,LIFT VFM425 ｼﾘﾝﾀﾞｱｯｾﾝ	1	INC.1-15
-	211F0-50241		CYL-ASSY,LIFT VFM450 ｼﾘﾝﾀﾞｱｯｾﾝ	1	INC.1-15
-	211F0-50251		CYL-ASSY,LIFT VFM475 ｼﾘﾝﾀﾞｱｯｾﾝ	1	INC.1-15
-	211F0-50261		CYL-ASSY,LIFT VFM500 ｼﾘﾝﾀﾞｱｯｾﾝ	1	INC.1-15
-	211F0-50271		CYL-ASSY,LIFT VFM550 ｼﾘﾝﾀﾞｱｯｾﾝ	1	INC.1-15
-	211F0-50281		CYL-ASSY,LIFT VFM600 ｼﾘﾝﾀﾞｱｯｾﾝ	1	INC.1-15
1	211F0-50311		TUBE VFM200 ﾁｭｰﾌﾞ	1	
-	211F0-50321		TUBE VFM225 ﾁｭｰﾌﾞ	1	
-	211F0-50331		TUBE VFM250 ﾁｭｰﾌﾞ	1	
-	211F0-50341		TUBE VFM270 ﾁｭｰﾌﾞ	1	
-	211F0-50351		TUBE VFM275 ﾁｭｰﾌﾞ	1	
-	211F0-50301		TUBE VFM300 ﾁｭｰﾌﾞ	1	
-	211F0-50361		TUBE VFM325 ﾁｭｰﾌﾞ	1	
-	211F0-50371		TUBE VFM330 ﾁｭｰﾌﾞ	1	
-	211F0-50381		TUBE VFM350 ﾁｭｰﾌﾞ	1	
-	211F0-50391		TUBE VFM366 ﾁｭｰﾌﾞ	1	
-	211F0-50401		TUBE VFM370 ﾁｭｰﾌﾞ	1	
-	211F0-50411		TUBE VFM375 ﾁｭｰﾌﾞ	1	
-	211F0-50421		TUBE VFM400 ﾁｭｰﾌﾞ	1	
-	211F0-50431		TUBE VFM425 ﾁｭｰﾌﾞ	1	
-	211F0-50441		TUBE VFM450 ﾁｭｰﾌﾞ	1	
-	211F0-50451		TUBE VFM475 ﾁｭｰﾌﾞ	1	
-	211F0-50461		TUBE VFM500 ﾁｭｰﾌﾞ	1	
-	211F0-50471		TUBE VFM550 ﾁｭｰﾌﾞ	1	
-	211F0-50481		TUBE VFM600 ﾁｭｰﾌﾞ	1	
2	210F0-50511		ROD,PISTON VFM200 ﾛｯﾄﾞ	1	
-	210F0-50521		ROD,PISTON VFM225 ﾛｯﾄﾞ	1	
-	54238-40311		ROD,PISTON VFM250 ﾛｯﾄﾞ	1	
-	27390-50321		ROD,PISTON VFM270 ﾛｯﾄﾞ	1	
-	54238-40321		ROD,PISTON VFM275 ﾛｯﾄﾞ	1	
-	54238-40301		ROD,PISTON VFM300 ﾛｯﾄﾞ	1	
-	27390-50331		ROD,PISTON VFM325 ﾛｯﾄﾞ	1	
-	54238-40331		ROD,PISTON VFM330 ﾛｯﾄﾞ	1	
-	54238-40341		ROD,PISTON VFM350 ﾛｯﾄﾞ	1	
-	27390-50341		ROD,PISTON VFM366 ﾛｯﾄﾞ	1	
-	27390-50351		ROD,PISTON VFM370 ﾛｯﾄﾞ	1	
-	54238-40351		ROD,PISTON VFM375 ﾛｯﾄﾞ	1	

FIG.185 LIFT CYLINDER(FRONT) [VFM18G]

(M5010510) リフトシリンダ(フロント)

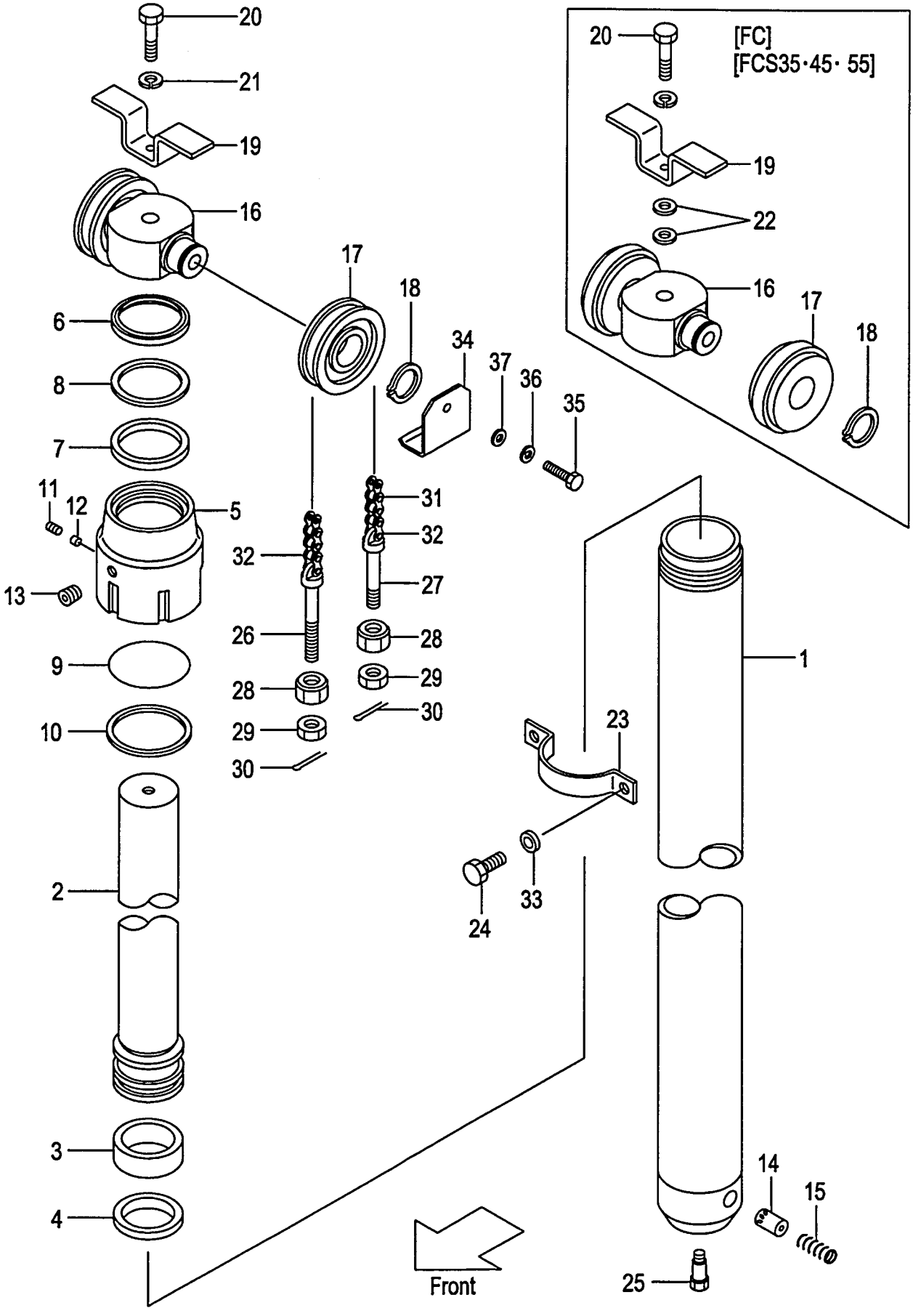

A:VFM18G(1T)
B:VFM18G(1.5T)
C:VFM18G(1.8T)

FIG.185
(M5010510)

Item No	Part No.	Mark	Description		Req'd	Remarks : Serial No.
-	27390-50361		ROD,PISTON VFM400	ﾛｯﾄﾞ	1	
-	27390-50371		ROD,PISTON VFM425	ﾛｯﾄﾞ	1	
-	27390-50381		ROD,PISTON VFM450	ﾛｯﾄﾞ	1	
-	27390-50391		ROD,PISTON VFM475	ﾛｯﾄﾞ	1	
-	27390-50401		ROD,PISTON VFM500	ﾛｯﾄﾞ	1	
-	27390-50411		ROD,PISTON VFM550	ﾛｯﾄﾞ	1	
-	27390-50421		ROD,PISTON VFM600	ﾛｯﾄﾞ	1	
3	22518-40121	*	WEARING	ｳｪｱﾘﾝｸﾞ	1	
4	54238-42011	*	RING,PISTON	ﾘﾝｸﾞ	1	
5	29560-82012		CAP	ｷｬｯﾌﾟ	1	
6	25808-42481	*	SEAL,DUST	ｼｰﾙ	1	
7	24230-82211	*	PACKING	ﾊﾟｯｷﾝｸﾞ	1	
8	24230-82221	*	RING,BACK-UP	ﾘﾝｸﾞ	1	
9	24230-82291	*	O-RING	Oﾘﾝｸﾞ	1	
10	24230-82231	*	RING,BACK-UP	ﾘﾝｸﾞ	1	
11	25908-44101		PLUG	ﾌﾟﾗｸﾞ	1	
12	25908-44111		PLUG,NYLON	ﾌﾟﾗｸﾞ	1	
13	23870-52871		PLUG	ﾌﾟﾗｸﾞ	1	
14	211F0-82551		PISTON	ﾋﾟｽﾄﾝ	1	
15	24389-46021		SPRING	ｽﾌﾟﾘﾝｸﾞ	1	
16	215T0-83001		HEAD,PISTON	ﾍｯﾄﾞ	1	
-	27390-82011		HEAD,PISTON	ﾍｯﾄﾞ	1	[FC][FCS35][FCS55][FCS45]
17	216G8-42031		SHEAVE	ｼｰﾌﾞ	2	
-	90789-40100		SHEAVE	ｼｰﾌﾞ	2	[FC][FCS35][FCS55][FCS45]
18	02100-00035		RING,SNAP	ｽﾅｯﾌﾟﾘﾝｸﾞ	2	
-	02100-00040		RING,SNAP	ｽﾅｯﾌﾟﾘﾝｸﾞ	2	[FC][FCS35][FCS55][FCS45]
19	215T0-83021		STOPPER	ｽﾄｯﾊﾟ	1	
-	27970-82211		STOPPER	ｽﾄｯﾊﾟ	1	[FC][FCS35][FCS55][FCS45]
20	01100-16060		BOLT	ﾎﾞﾙﾄ	1	
-	01100-16065		BOLT	ﾎﾞﾙﾄ	1	[FC][FCS35][FCS55][FCS45]
21	02010-00016		WASHER	ﾜｯｼｬ	1	
22	02000-00016		WASHER	ﾜｯｼｬ	2	[FC][FCS35][FCS55][FCS45]
23	27390-82101		SUPPORT	ｻﾎﾟｰﾄ	1	
24	01103-10020		BOLT	ﾎﾞﾙﾄ	2	
25	214A0-82831		BOLT	ﾎﾞﾙﾄ	1	
26	218G8-42501		PIN,ANCHOR	ﾋﾟﾝ	2	
-	510F5-54051		PIN,ANCHOR	ﾋﾟﾝ	2	[FC][FCS35][FCS55][FCS45]
27	218G8-42521		PIN,ANCHOR	ﾋﾟﾝ	2	
-	510F5-54061		PIN,ANCHOR	ﾋﾟﾝ	2	[FC][FCS35][FCS55][FCS45]
28	22118-40181		NUT	ﾅｯﾄ	4	
29	01400-00014		NUT	ﾅｯﾄ	4	
30	02200-03030		PIN	ﾋﾟﾝ	4	
31	218G8-45611		CHAIN VFM200	ﾁｪｰﾝ	2	
-	218G8-45691		CHAIN VFM225	ﾁｪｰﾝ	2	
-	218G8-45701		CHAIN VFM250	ﾁｪｰﾝ	2	
-	218G8-45831		CHAIN VFM270	ﾁｪｰﾝ	2	
-	218G8-45851		CHAIN VFM275	ﾁｪｰﾝ	2	
-	218G8-45931		CHAIN VFM300	ﾁｪｰﾝ	2	
-	218G8-46011		CHAIN VFM325	ﾁｪｰﾝ	2	
-	218G8-46031		CHAIN VFM330	ﾁｪｰﾝ	2	

FIG.185 LIFT CYLINDER(FRONT) [VFM18G]

(M5010510) リフトシリンダ(フロント)

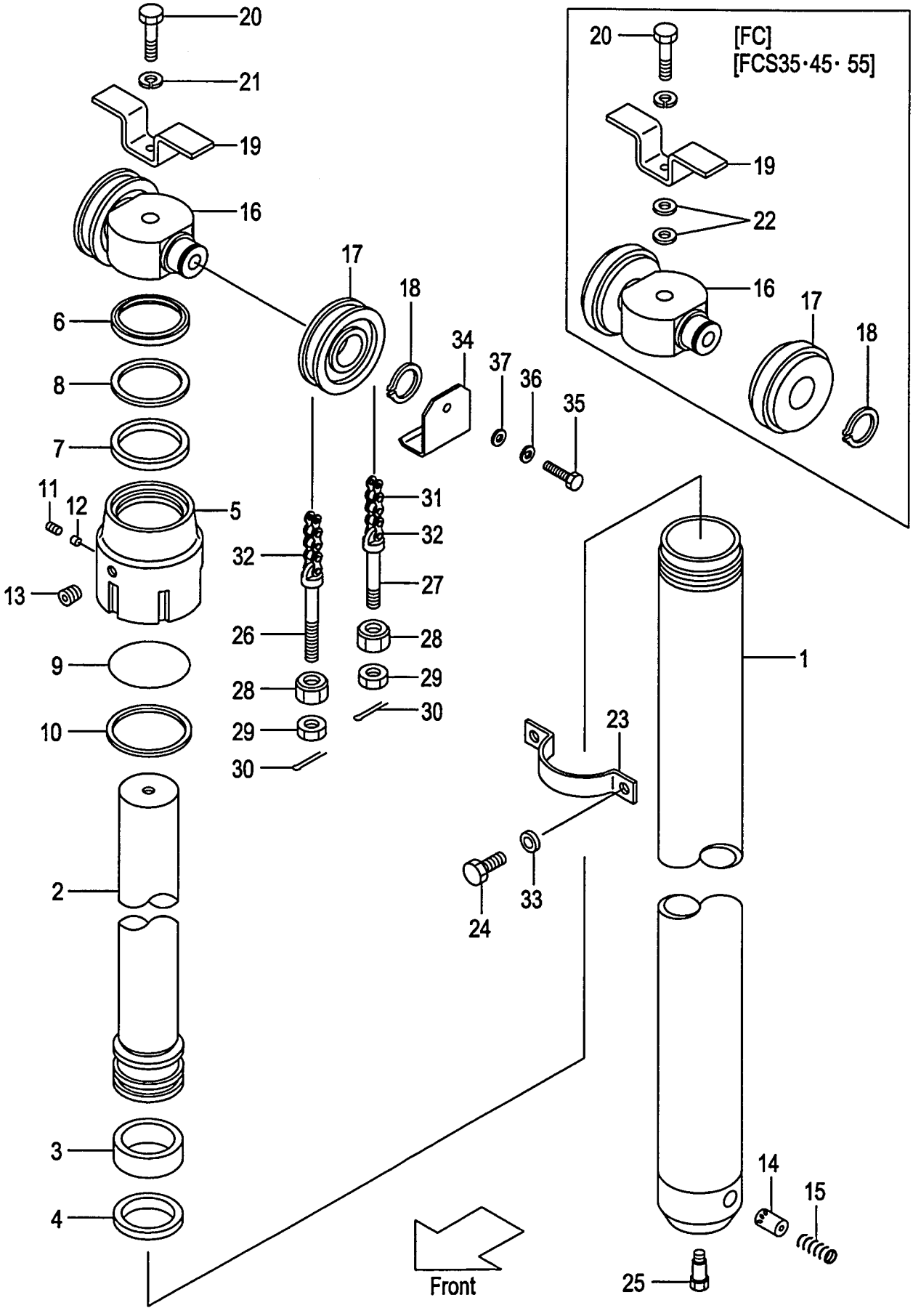

A:VFM18G(1T)
B:VFM18G(1.5T)
C:VFM18G(1.8T)

FIG.185
(M5010510)

Item No	Part No.	Mark	Description		Req'd	Remarks : Serial No.
-	218G8-46091		CHAIN VFM350	ﾁｪｰﾝ	2	
-	218G8-46151		CHAIN VFM366	ﾁｪｰﾝ	2	
-	218G8-46151		CHAIN VFM370	ﾁｪｰﾝ	2	
-	218G8-46171		CHAIN VFM375	ﾁｪｰﾝ	2	
-	218G8-46271		CHAIN VFM400	ﾁｪｰﾝ	2	
-	218G8-46351		CHAIN VFM425	ﾁｪｰﾝ	2	
-	218G8-46431		CHAIN VFM450	ﾁｪｰﾝ	2	
-	218G8-46511		CHAIN VFM475	ﾁｪｰﾝ	2	
-	218G8-46591		CHAIN VFM500	ﾁｪｰﾝ	2	
-	218G8-46791		CHAIN VFM550	ﾁｪｰﾝ	2	
-	218G8-46951		CHAIN VFM600	ﾁｪｰﾝ	2	
-	09001-08043		CHAIN VFM200	ﾁｪｰﾝ	2	[FC][FCS35][FCS55][FCS45]
-	09001-08047		CHAIN VFM225	ﾁｪｰﾝ	2	[FC][FCS35][FCS55][FCS45]
-	09001-08053		CHAIN VFM250	ﾁｪｰﾝ	2	[FC][FCS35][FCS55][FCS45]
-	09001-08055		CHAIN VFM270	ﾁｪｰﾝ	2	[FC][FCS35][FCS55][FCS45]
-	09001-08057		CHAIN VFM275	ﾁｪｰﾝ	2	[FC][FCS35][FCS55][FCS45]
-	09001-08061		CHAIN VFM300	ﾁｪｰﾝ	2	[FC][FCS35][FCS55][FCS45]
-	09001-08067		CHAIN VFM325	ﾁｪｰﾝ	2	[FC][FCS35][FCS55][FCS45]
-	09001-08067		CHAIN VFM330	ﾁｪｰﾝ	2	[FC][FCS35][FCS55][FCS45]
-	09001-08071		CHAIN VFM350	ﾁｪｰﾝ	2	[FC][FCS35][FCS55][FCS45]
-	09001-08075		CHAIN VFM366	ﾁｪｰﾝ	2	[FC][FCS35][FCS55][FCS45]
-	09001-08075		CHAIN VFM370	ﾁｪｰﾝ	2	[FC][FCS35][FCS55][FCS45]
-	09001-08077		CHAIN VFM375	ﾁｪｰﾝ	2	[FC][FCS35][FCS55][FCS45]
-	09001-08083		CHAIN VFM400	ﾁｪｰﾝ	2	[FC][FCS35][FCS55][FCS45]
-	09001-08089		CHAIN VFM425	ﾁｪｰﾝ	2	[FC][FCS35][FCS55][FCS45]
-	09001-08093		CHAIN VFM450	ﾁｪｰﾝ	2	[FC][FCS35][FCS55][FCS45]
-	09001-08099		CHAIN VFM475	ﾁｪｰﾝ	2	[FC][FCS35][FCS55][FCS45]
-	09001-08103		CHAIN VFM500	ﾁｪｰﾝ	2	[FC][FCS35][FCS55][FCS45]
-	09001-08115		CHAIN VFM550	ﾁｪｰﾝ	2	[FC][FCS35][FCS55][FCS45]
-	09001-08125		CHAIN VFM600	ﾁｪｰﾝ	2	[FC][FCS35][FCS55][FCS45]
32	218G8-42701		LINK	ﾘﾝｸ	4	
33	02011-00010		WASHER	ﾜｯｼｬ	2	
34	57393-02041		COVER	ｶﾊﾞｰ	2	[EXD][EXE][EXN]
35	01100-16016		BOLT	ﾎﾞﾙﾄ	2	[EXD][EXE][EXN]
36	02010-00016		WASHER	ﾜｯｼｬ	2	[EXD][EXE][EXN]
37	02000-00016		WASHER	ﾜｯｼｬ	2	[EXD][EXE][EXN]
K1	27390-59801		KIT,OVERHAUL	ｵｰﾊﾞﾎｰﾙｷｯﾄ	1	INC.3,4,6-10

FIG.186 LIFT CYLINDER(REAR) [VFM18G]

(M5010520) ﾘﾌﾄｼﾘﾝﾀﾞ(ﾘﾔｰ)

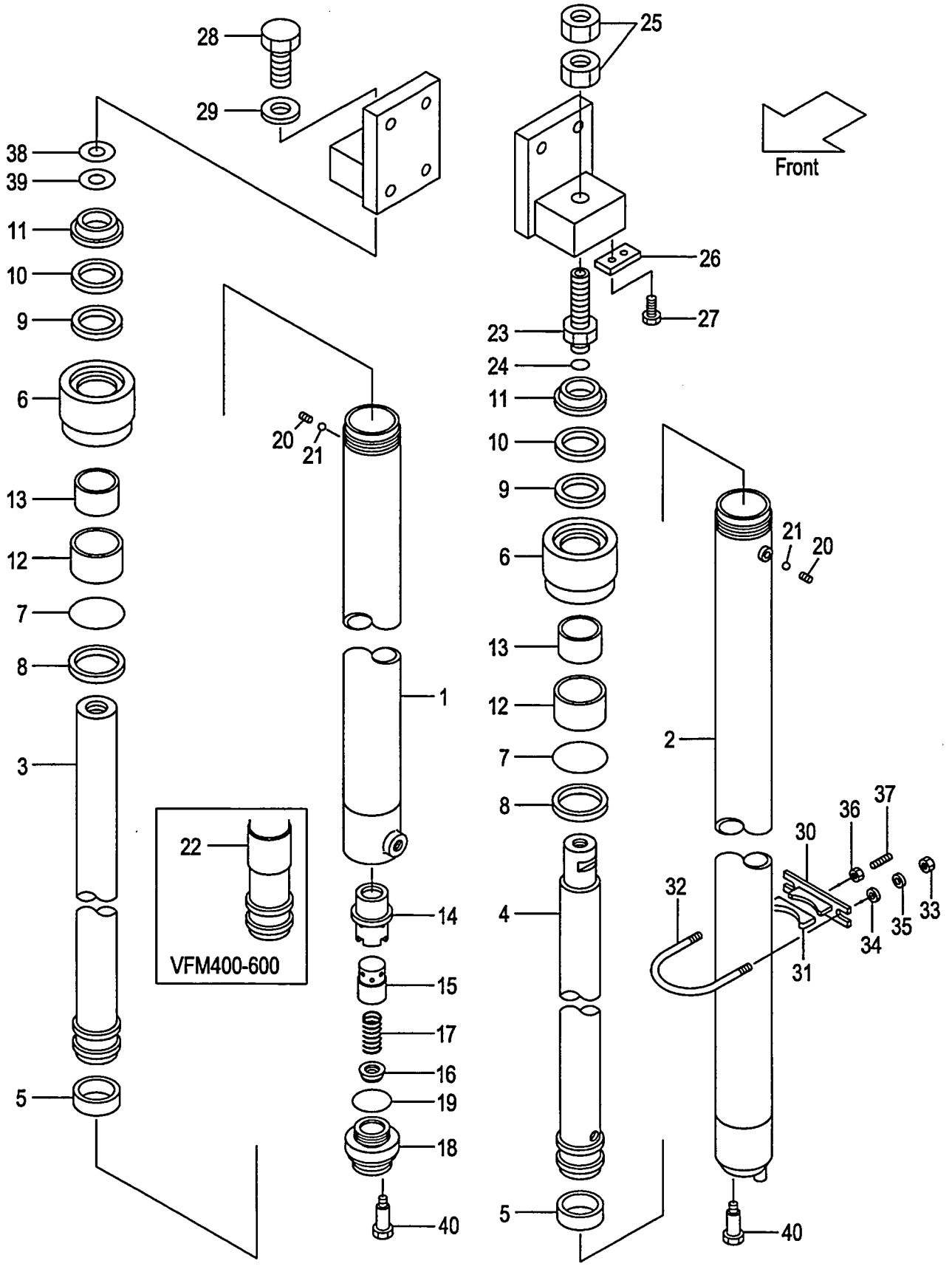

A:VFM18G(1T)
B:VFM18G(1.5T)
C:VFM18G(1.8T)

FIG.186
(M5010520)

Item No	Part No.	Mark	Description		Req'd	Remarks : Serial No.
A1	216G0-50211		CYL-ASSY,RH VFM200	ｼﾘﾝﾀﾞｱｯｾﾝ	1	INC.1,3,5-22
-	216G0-50221		CYL-ASSY,RH VFM225	ｼﾘﾝﾀﾞｱｯｾﾝ	1	INC.1,3,5-22
-	216G0-50231		CYL-ASSY,RH VFM250	ｼﾘﾝﾀﾞｱｯｾﾝ	1	INC.1,3,5-22
-	216G0-50241		CYL-ASSY,RH VFM270	ｼﾘﾝﾀﾞｱｯｾﾝ	1	INC.1,3,5-22
-	216G0-50251		CYL-ASSY,RH VFM275	ｼﾘﾝﾀﾞｱｯｾﾝ	1	INC.1,3,5-22
-	216G0-50201		CYL-ASSY,RH VFM300	ｼﾘﾝﾀﾞｱｯｾﾝ	1	INC.1,3,5-22
-	216G0-50261		CYL-ASSY,RH VFM325	ｼﾘﾝﾀﾞｱｯｾﾝ	1	INC.1,3,5-22
-	216G0-50271		CYL-ASSY,RH VFM330	ｼﾘﾝﾀﾞｱｯｾﾝ	1	INC.1,3,5-22
-	216G0-50281		CYL-ASSY,RH VFM350	ｼﾘﾝﾀﾞｱｯｾﾝ	1	INC.1,3,5-22
-	216G0-50291		CYL-ASSY,RH VFM366	ｼﾘﾝﾀﾞｱｯｾﾝ	1	INC.1,3,5-22
-	216G0-50301		CYL-ASSY,RH VFM370	ｼﾘﾝﾀﾞｱｯｾﾝ	1	INC.1,3,5-22
-	216G0-50311		CYL-ASSY,RH VFM375	ｼﾘﾝﾀﾞｱｯｾﾝ	1	INC.1,3,5-22
-	216G0-50321		CYL-ASSY,RH VFM400	ｼﾘﾝﾀﾞｱｯｾﾝ	1	INC.1,3,5-22
-	216G0-50331		CYL-ASSY,RH VFM425	ｼﾘﾝﾀﾞｱｯｾﾝ	1	INC.1,3,5-22
-	216G0-50341		CYL-ASSY,RH VFM450	ｼﾘﾝﾀﾞｱｯｾﾝ	1	INC.1,3,5-22
-	216G0-50351		CYL-ASSY,RH VFM475	ｼﾘﾝﾀﾞｱｯｾﾝ	1	INC.1,3,5-22
-	216G0-50361		CYL-ASSY,RH VFM500	ｼﾘﾝﾀﾞｱｯｾﾝ	1	INC.1,3,5-22
-	216G0-50371		CYL-ASSY,RH VFM550	ｼﾘﾝﾀﾞｱｯｾﾝ	1	INC.1,3,5-22
-	216G0-50381		CYL-ASSY,RH VFM600	ｼﾘﾝﾀﾞｱｯｾﾝ	1	INC.1,3,5-22
A2	216G0-50411		CYL-ASSY,LH VFM200	ｼﾘﾝﾀﾞｱｯｾﾝ	1	INC.2,4-13,20-22
-	216G0-50421		CYL-ASSY,LH VFM225	ｼﾘﾝﾀﾞｱｯｾﾝ	1	INC.2,4-13,20-22
-	216G0-50431		CYL-ASSY,LH VFM250	ｼﾘﾝﾀﾞｱｯｾﾝ	1	INC.2,4-13,20-22
-	216G0-50441		CYL-ASSY,LH VFM270	ｼﾘﾝﾀﾞｱｯｾﾝ	1	INC.2,4-13,20-22
-	216G0-50451		CYL-ASSY,LH VFM275	ｼﾘﾝﾀﾞｱｯｾﾝ	1	INC.2,4-13,20-22
-	216G0-50401		CYL-ASSY,LH VFM300	ｼﾘﾝﾀﾞｱｯｾﾝ	1	INC.2,4-13,20-22
-	216G0-50461		CYL-ASSY,LH VFM325	ｼﾘﾝﾀﾞｱｯｾﾝ	1	INC.2,4-13,20-22
-	216G0-50471		CYL-ASSY,LH VFM330	ｼﾘﾝﾀﾞｱｯｾﾝ	1	INC.2,4-13,20-22
-	216G0-50481		CYL-ASSY,LH VFM350	ｼﾘﾝﾀﾞｱｯｾﾝ	1	INC.2,4-13,20-22
-	216G0-50491		CYL-ASSY,LH VFM366	ｼﾘﾝﾀﾞｱｯｾﾝ	1	INC.2,4-13,20-22
-	216G0-50501		CYL-ASSY,LH VFM370	ｼﾘﾝﾀﾞｱｯｾﾝ	1	INC.2,4-13,20-22
-	216G0-50511		CYL-ASSY,LH VFM375	ｼﾘﾝﾀﾞｱｯｾﾝ	1	INC.2,4-13,20-22
-	216G0-50521		CYL-ASSY,LH VFM400	ｼﾘﾝﾀﾞｱｯｾﾝ	1	INC.2,4-13,20-22
-	216G0-50531		CYL-ASSY,LH VFM425	ｼﾘﾝﾀﾞｱｯｾﾝ	1	INC.2,4-13,20-22
-	216G0-50541		CYL-ASSY,LH VFM450	ｼﾘﾝﾀﾞｱｯｾﾝ	1	INC.2,4-13,20-22
-	216G0-50551		CYL-ASSY,LH VFM475	ｼﾘﾝﾀﾞｱｯｾﾝ	1	INC.2,4-13,20-22
-	216G0-50561		CYL-ASSY,LH VFM500	ｼﾘﾝﾀﾞｱｯｾﾝ	1	INC.2,4-13,20-22
-	216G0-50571		CYL-ASSY,LH VFM550	ｼﾘﾝﾀﾞｱｯｾﾝ	1	INC.2,4-13,20-22
-	216G0-50581		CYL-ASSY,LH VFM600	ｼﾘﾝﾀﾞｱｯｾﾝ	1	INC.2,4-13,20-22
1	216G0-50611		TUBE RH VFM200	ﾁｭｰﾌﾞ	1	
-	216G0-50621		TUBE RH VFM225	ﾁｭｰﾌﾞ	1	
-	216G0-50631		TUBE RH VFM250	ﾁｭｰﾌﾞ	1	
-	216G0-50641		TUBE RH VFM270	ﾁｭｰﾌﾞ	1	
-	216G0-50651		TUBE RH VFM275	ﾁｭｰﾌﾞ	1	
-	216G0-50601		TUBE RH VFM300	ﾁｭｰﾌﾞ	1	
-	216G0-50661		TUBE RH VFM325	ﾁｭｰﾌﾞ	1	
-	216G0-50671		TUBE RH VFM330	ﾁｭｰﾌﾞ	1	
-	216G0-50681		TUBE RH VFM350	ﾁｭｰﾌﾞ	1	
-	234A0-50601		TUBE RH VFM366	ﾁｭｰﾌﾞ	1	
-	216G0-50701		TUBE RH VFM370	ﾁｭｰﾌﾞ	1	
-	216G0-50711		TUBE RH VFM375	ﾁｭｰﾌﾞ	1	

FIG.186 LIFT CYLINDER(REAR) [VFM18G]

(M5010520) ﾘﾌﾄｼﾘﾝﾀﾞ(ﾘﾔｰ)

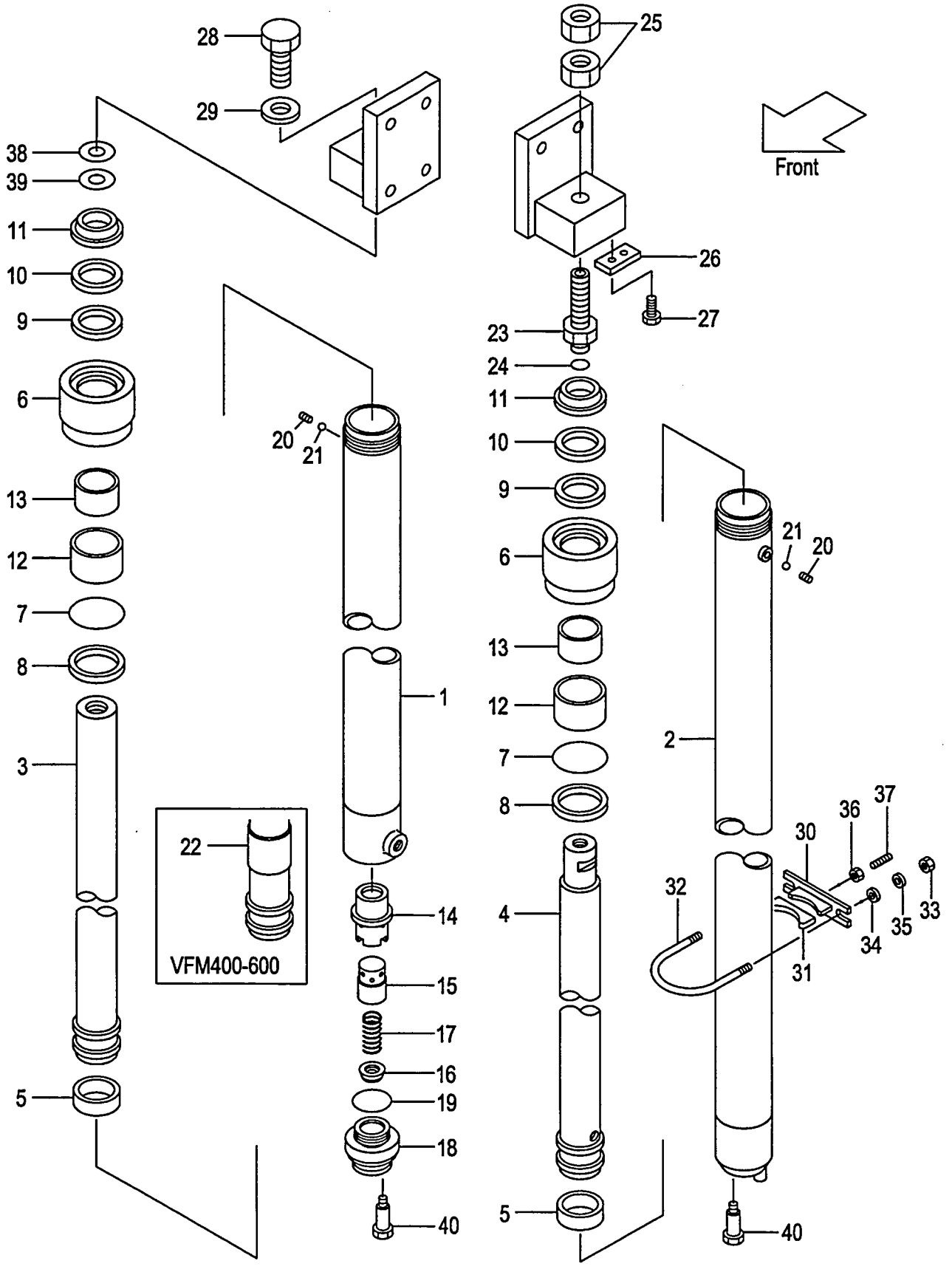

A:VFM18G(1T)
B:VFM18G(1.5T)
C:VFM18G(1.8T)

FIG.186
(M5010520)

Item No	Part No.	Mark	Description	Req'd	Remarks : Serial No.
-	216G0-50721		TUBE RH VFM400 ﾁｭｰﾌﾞ	1	
-	216G0-50731		TUBE RH VFM425 ﾁｭｰﾌﾞ	1	
-	216G0-50741		TUBE RH VFM450 ﾁｭｰﾌﾞ	1	
-	216G0-50751		TUBE RH VFM475 ﾁｭｰﾌﾞ	1	
-	216G0-50761		TUBE RH VFM500 ﾁｭｰﾌﾞ	1	
-	216G0-50771		TUBE RH VFM550 ﾁｭｰﾌﾞ	1	
-	216G0-50781		TUBE RH VFM600 ﾁｭｰﾌﾞ	1	
2	216G0-50811		TUBE LH VFM200 ﾁｭｰﾌﾞ	1	
-	216G0-50821		TUBE LH VFM225 ﾁｭｰﾌﾞ	1	
-	216G0-50831		TUBE LH VFM250 ﾁｭｰﾌﾞ	1	
-	216G0-50841		TUBE LH VFM270 ﾁｭｰﾌﾞ	1	
-	216G0-50851		TUBE LH VFM275 ﾁｭｰﾌﾞ	1	
-	216G0-50801		TUBE LH VFM300 ﾁｭｰﾌﾞ	1	
-	216G0-50861		TUBE LH VFM325 ﾁｭｰﾌﾞ	1	
-	216G0-50871		TUBE LH VFM330 ﾁｭｰﾌﾞ	1	
-	216G0-50881		TUBE LH VFM350 ﾁｭｰﾌﾞ	1	
-	234A0-50801		TUBE LH VFM366 ﾁｭｰﾌﾞ	1	
-	216G0-50901		TUBE LH VFM370 ﾁｭｰﾌﾞ	1	
-	216G0-50911		TUBE LH VFM375 ﾁｭｰﾌﾞ	1	
-	216G0-50921		TUBE LH VFM400 ﾁｭｰﾌﾞ	1	
-	216G0-50931		TUBE LH VFM425 ﾁｭｰﾌﾞ	1	
-	216G0-50941		TUBE LH VFM450 ﾁｭｰﾌﾞ	1	
-	216G0-50951		TUBE LH VFM475 ﾁｭｰﾌﾞ	1	
-	216G0-50961		TUBE LH VFM500 ﾁｭｰﾌﾞ	1	
-	216G0-50971		TUBE LH VFM550 ﾁｭｰﾌﾞ	1	
-	216G0-50981		TUBE LH VFM600 ﾁｭｰﾌﾞ	1	
3	211F0-51511		ROD,PISTON,RH VFM200 ﾛｯﾄﾞ	1	
-	211F0-51521		ROD,PISTON,RH VFM225 ﾛｯﾄﾞ	1	
-	211F0-51531		ROD,PISTON,RH VFM250 ﾛｯﾄﾞ	1	
-	211F0-51541		ROD,PISTON,RH VFM270 ﾛｯﾄﾞ	1	
-	211F0-51551		ROD,PISTON,RH VFM275 ﾛｯﾄﾞ	1	
-	211F0-51501		ROD,PISTON,RH VFM300 ﾛｯﾄﾞ	1	
-	211F0-51561		ROD,PISTON,RH VFM325 ﾛｯﾄﾞ	1	
-	211F0-51571		ROD,PISTON,RH VFM330 ﾛｯﾄﾞ	1	
-	211F0-51581		ROD,PISTON,RH VFM350 ﾛｯﾄﾞ	1	
-	211F0-51591		ROD,PISTON,RH VFM366 ﾛｯﾄﾞ	1	
-	211F0-51601		ROD,PISTON,RH VFM370 ﾛｯﾄﾞ	1	
-	211F0-51611		ROD,PISTON,RH VFM375 ﾛｯﾄﾞ	1	
-	211F0-51621		ROD,PISTON,RH VFM400 ﾛｯﾄﾞ	1	
-	211F0-51631		ROD,PISTON,RH VFM425 ﾛｯﾄﾞ	1	
-	211F0-51641		ROD,PISTON,RH VFM450 ﾛｯﾄﾞ	1	
-	211F0-51651		ROD,PISTON,RH VFM475 ﾛｯﾄﾞ	1	
-	211F0-51661		ROD,PISTON,RH VFM500 ﾛｯﾄﾞ	1	
-	211F0-51671		ROD,PISTON,RH VFM550 ﾛｯﾄﾞ	1	
-	211F0-51681		ROD,PISTON,RH VFM600 ﾛｯﾄﾞ	1	
4	211F0-51711		ROD,PISTON,LH VFM200 ﾛｯﾄﾞ	1	
-	211F0-51721		ROD,PISTON,LH VFM225 ﾛｯﾄﾞ	1	
-	211F0-51731		ROD,PISTON,LH VFM250 ﾛｯﾄﾞ	1	
-	211F0-51741		ROD,PISTON,LH VFM270 ﾛｯﾄﾞ	1	
-	211F0-51751		ROD,PISTON,LH VFM275 ﾛｯﾄﾞ	1	

FIG.186 LIFT CYLINDER(REAR) [VFM18G]

(M5010520) ﾘﾌﾄｼﾘﾝﾀﾞ(ﾘﾔｰ)

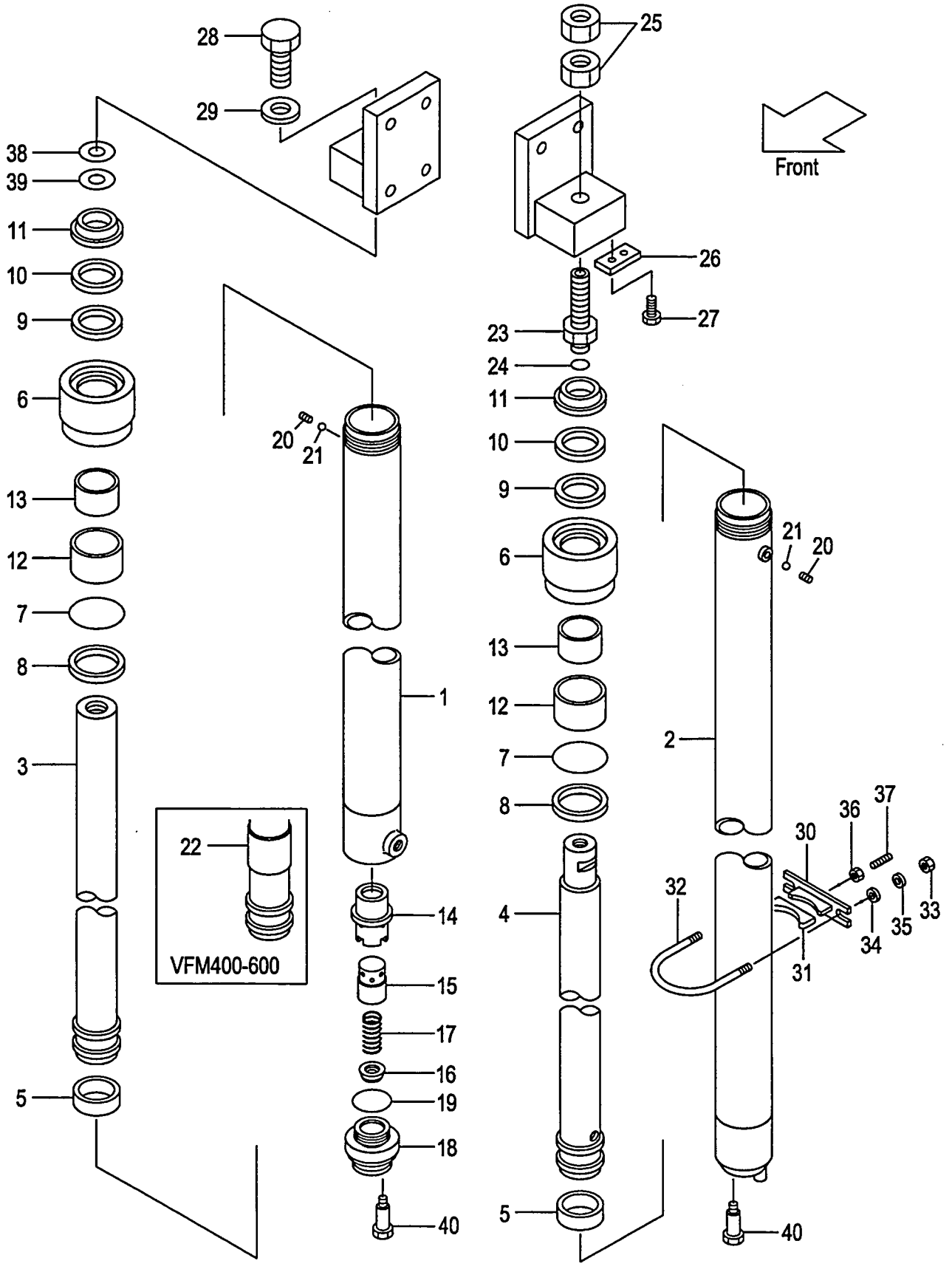

A:VFM18G(1T)
B:VFM18G(1.5T)
C:VFM18G(1.8T)

FIG.186
(M5010520)

Item No	Part No.	Mark	Description		Req'd	Remarks : Serial No.
-	211F0-51701		ROD,PISTON,LH VFM300	ﾛｯﾄﾞ	1	
-	211F0-51761		ROD,PISTON,LH VFM325	ﾛｯﾄﾞ	1	
-	211F0-51771		ROD,PISTON,LH VFM330	ﾛｯﾄﾞ	1	
-	211F0-51781		ROD,PISTON,LH VFM350	ﾛｯﾄﾞ	1	
-	211F0-51791		ROD,PISTON,LH VFM366	ﾛｯﾄﾞ	1	
-	211F0-51801		ROD,PISTON,LH VFM370	ﾛｯﾄﾞ	1	
-	211F0-51811		ROD,PISTON,LH VFM375	ﾛｯﾄﾞ	1	
-	211F0-51821		ROD,PISTON,LH VFM400	ﾛｯﾄﾞ	1	
-	211F0-51831		ROD,PISTON,LH VFM425	ﾛｯﾄﾞ	1	
-	211F0-51841		ROD,PISTON,LH VFM450	ﾛｯﾄﾞ	1	
-	211F0-51851		ROD,PISTON,LH VFM475	ﾛｯﾄﾞ	1	
-	211F0-51861		ROD,PISTON,LH VFM500	ﾛｯﾄﾞ	1	
-	211F0-51871		ROD,PISTON,LH VFM550	ﾛｯﾄﾞ	1	
-	211F0-51881		ROD,PISTON,LH VFM600	ﾛｯﾄﾞ	1	
5	22580-53321	*	WEARING	ｳｪｱﾘﾝｸﾞ	2	
6	216G0-53011		CAP,CYL	ｷｬｯﾌﾟ	2	
7	210F8-42631	*	O-RING	Oﾘﾝｸﾞ	2	
8	214A0-53681	*	RING,BACK-UP	ﾘﾝｸﾞ	2	
9	23658-52051	*	PACKING	ﾊﾟｯｷﾝｸﾞ	2	
10	23658-52061	*	RING,BACK-UP	ﾘﾝｸﾞ	2	
11	210F0-53691	*	SEAL	ｼｰﾙ	2	
A3	216G0-53051		SLEEVE-ASSY	ｽﾘｰﾌﾞｱｯｾﾝ	2	INC.12,13
12	216G0-53061		SLEEVE	ｽﾘｰﾌﾞ	2	
13	22678-52021		BUSHING	ﾌﾞｯｼﾝｸﾞ	2	
14	53658-43021		SLEEVE	ｽﾘｰﾌﾞ	1	(RH)
15	53658-43011		PISTON	ﾋﾟｽﾄﾝ	1	(RH)
16	53658-43001		VALVE,CHECK	ﾊﾞﾙﾌﾞ	1	(RH)
17	53658-43031		SPRING	ｽﾌﾟﾘﾝｸﾞ	1	(RH)
18	53658-43041		PLUG	ﾌﾟﾗｸﾞ	1	(RH)
19	03320-00340	*	O-RING	Oﾘﾝｸﾞ	1	(RH)
20	234A0-52611		PLUG	ﾌﾟﾗｸﾞ	2	
21	03190-00006		BALL	ﾎﾞｰﾙ	2	
22	210F0-53701		SPACER	ｽﾍﾟｰｻ	1	(VFM400-500)
-	210F0-53701		SPACER	ｽﾍﾟｰｻ	2	(VFM550-600)
23	23200-50811		NIPPLE	ﾆｯﾌﾟﾙ	1	(LH)
24	03320-00180		O-RING	Oﾘﾝｸﾞ	1	(LH)
25	23200-50841		NUT	ﾅｯﾄ	2	(LH)
26	23648-50161		PLATE,KEY	ﾌﾟﾚｰﾄ	1	(LH)
27	01184-10020		BOLT & WASHER	ﾎﾞﾙﾄ & ﾜｯｼｬ	2	(LH)
28	01103-14040		BOLT	ﾎﾞﾙﾄ	1	(RH)
29	02011-00014		WASHER	ﾜｯｼｬ	1	(RH)
A7	215E8-42171		SUPPORT-ASSY	ｻﾎﾟｰﾄｱｯｾﾝ	2	(VFM200-375) INC.30,31
-	215E8-42171		SUPPORT-ASSY	ｻﾎﾟｰﾄｱｯｾﾝ	4	(VFM400-600) INC.30,31
30	215E8-42181		SUPPORT	ｻﾎﾟｰﾄ	2	(VFM200-375)
-	215E8-42181		SUPPORT	ｻﾎﾟｰﾄ	4	(VFM400-600)
31	24868-42111		RUBBER	ﾗﾊﾞｰ	2	(VFM200-375)
-	24868-42111		RUBBER	ﾗﾊﾞｰ	4	(VFM400-600)
32	216G8-43161		U-BOLT	Uﾎﾞﾙﾄ	2	(VFM200-375)
-	216G8-43161		U-BOLT	Uﾎﾞﾙﾄ	4	(VFM400-600)
33	234A8-42561		NUT	ﾅｯﾄ	4	(VFM200-375)

FIG.186 LIFT CYLINDER(REAR) [VFM18G]

(M5010520) ﾘﾌﾄｼﾘﾝﾀﾞ(ﾘﾔｰ)

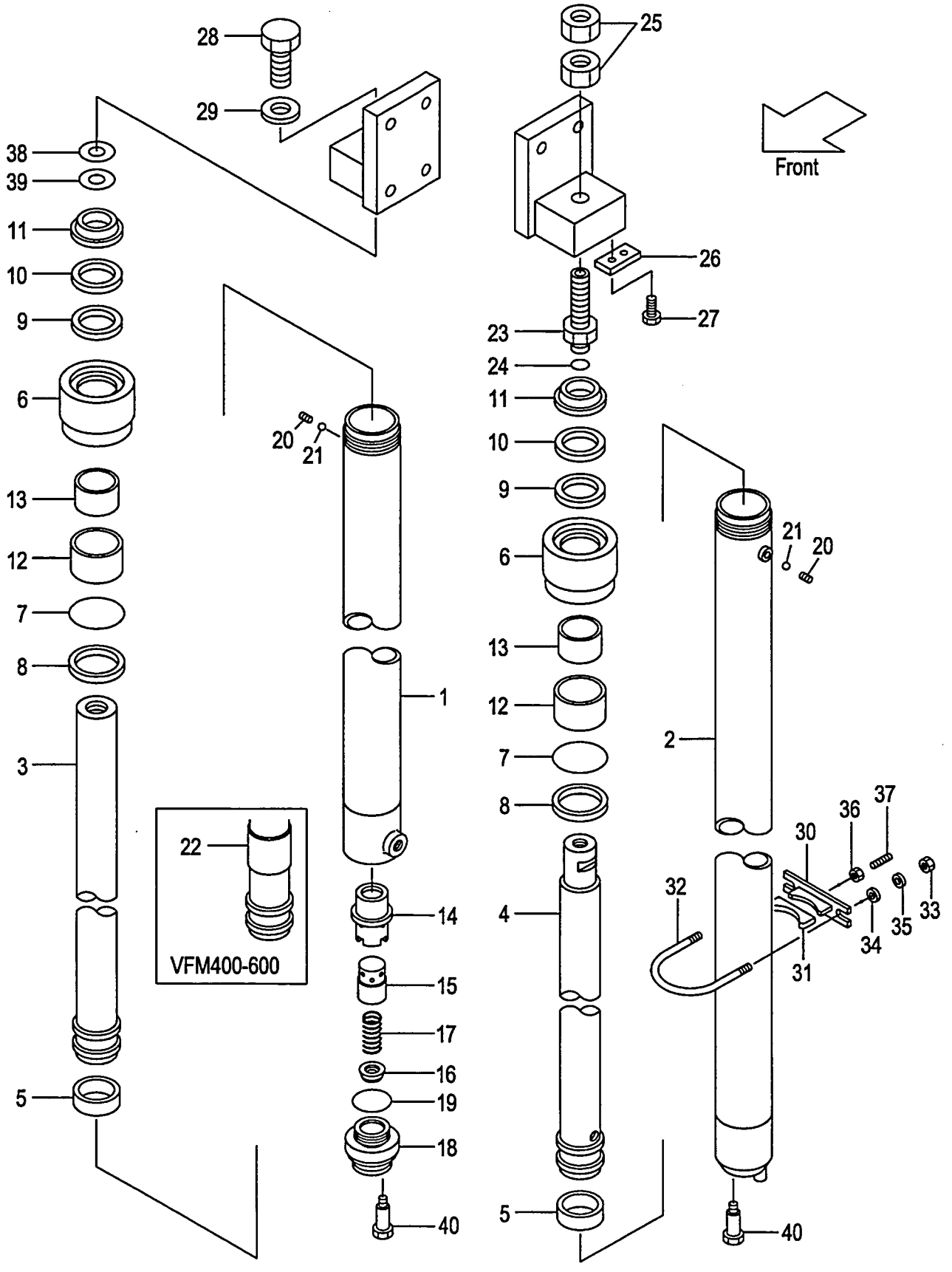

A:VFM18G(1T)
B:VFM18G(1.5T)
C:VFM18G(1.8T)

FIG.186
(M5010520)

Item No	Part No.	Mark	Description		Req'd	Remarks : Serial No.
-	234A8-42561		NUT	ﾅｯﾄ	8	(VFM400-600)
34	02000-20010		WASHER	ﾜｯｼｬ	4	(VFM200-375)
-	02000-20010		WASHER	ﾜｯｼｬ	8	(VFM400-600)
35	02010-20010		WASHER	ﾜｯｼｬ	4	(VFM200-375)
-	02010-20010		WASHER	ﾜｯｼｬ	8	(VFM400-600)
36	234A8-42571		NUT	ﾅｯﾄ	2	(VFM200-375)
-	234A8-42571		NUT	ﾅｯﾄ	4	(VFM400-600)
37	215E8-42231		BOLT	ﾎﾞﾙﾄ	2	(VFM200-375)
-	215E8-42231		BOLT	ﾎﾞﾙﾄ	4	(VFM400-600)
38	23917-42191		SHIM	ｼﾑ	5	
39	22679-43831		SHIM	ｼﾑ	5	
40	214A8-42661		BOLT	ﾎﾞﾙﾄ	2	
K1	216G0-59801		KIT,OVERHAUL	ｵｰﾊﾞｰﾎｰﾙｷｯﾄ	1	INC.5,7-11,19

FIG.187 MAST PIPING [VFM18G]

(M5010530) マストパイピング

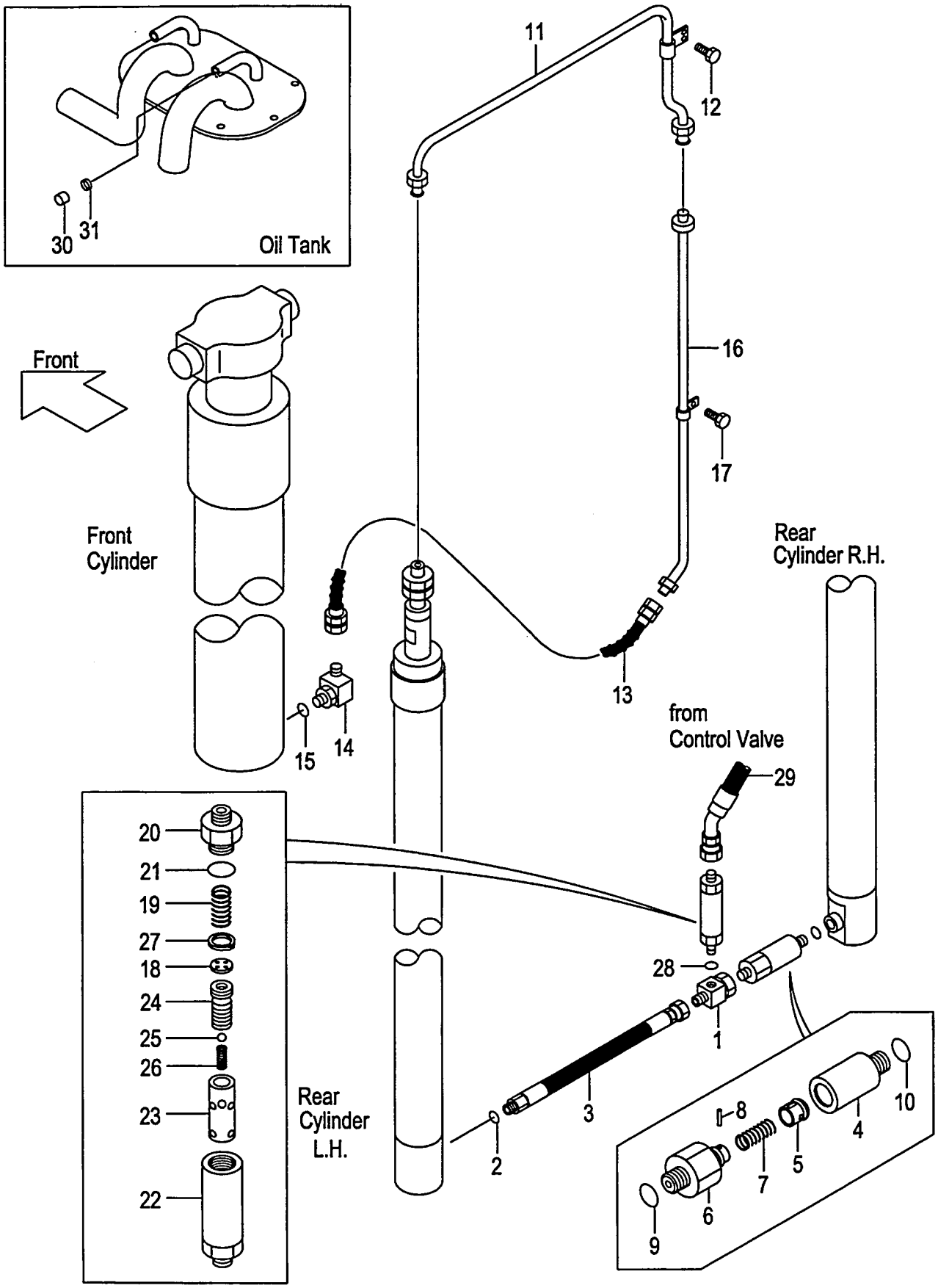

A:VFM18G(1T)
B:VFM18G(1.5T)
C:VFM18G(1.8T)

FIG.187
(M5010530)

Item No	Part No.	Mark	Description		Req'd	Remarks : Serial No.
1	234A0-62101		THREE-WAY	ｽﾘｰｳｪｲ	1	
2	03320-00140		O-RING	Oﾘﾝｸﾞ	1	
3	277H0-62101		HOSE	ﾎｰｽ	1	
A1	277H0-63001		VALVE-ASSY,CUT	ｶｯﾄﾊﾞﾙﾌﾞｱｯｾﾝ	1	INC.4-10
4	277H0-62111		ADAPTER	ｱﾀﾞﾌﾟﾀ	1	
A2	216G0-93201		VALVE-SUB-ASSY,CUT	ｶｯﾄﾊﾞﾙﾌﾞｻﾌﾞｱｯｾﾝ	1	INC.5-9
5	NO PART NO.	#	PISTON	ﾋﾟｽﾄﾝ	1	
6	NO PART NO.	#	NIPPLE	ﾆｯﾌﾟﾙ	1	
7	234A8-42611		SPRING	ｽﾌﾟﾘﾝｸﾞ	1	
8	02270-01014		PIN	ﾋﾟﾝ	1	
9	03320-00140		O-RING	Oﾘﾝｸﾞ	1	
10	03320-00140		O-RING	Oﾘﾝｸﾞ	1	
11	211F0-62301		PIPE	ﾊﾟｲﾌﾟ	1	
12	01183-06016		BOLT & WASHER	ﾎﾞﾙﾄ & ﾜｯｼｬ	2	
13	214A0-62151		HOSE	ﾎｰｽ	1	
A3	229F0-91001		ELBOW-ASSY	ｴﾙﾎﾞｱｯｾﾝ	1	INC.14,15
14	229F0-94001		ELBOW	ｴﾙﾎﾞ	1	
15	03320-00240		O-RING	Oﾘﾝｸﾞ	1	
16	210F0-60211		PIPE VFM200	ﾊﾟｲﾌﾟ	1	
-	210F0-60221		PIPE VFM225	ﾊﾟｲﾌﾟ	1	
-	210F0-60231		PIPE VFM250	ﾊﾟｲﾌﾟ	1	
-	210F0-60241		PIPE VFM270	ﾊﾟｲﾌﾟ	1	
-	210F0-60251		PIPE VFM275	ﾊﾟｲﾌﾟ	1	
-	210F0-60201		PIPE VFM300	ﾊﾟｲﾌﾟ	1	
-	210F0-60261		PIPE VFM325	ﾊﾟｲﾌﾟ	1	
-	210F0-60271		PIPE VFM330	ﾊﾟｲﾌﾟ	1	
-	210F0-60281		PIPE VFM350	ﾊﾟｲﾌﾟ	1	
-	210F0-60291		PIPE VFM366	ﾊﾟｲﾌﾟ	1	
-	210F0-60301		PIPE VFM370	ﾊﾟｲﾌﾟ	1	
-	210F0-60311		PIPE VFM375	ﾊﾟｲﾌﾟ	1	
-	210F0-60321		PIPE VFM400	ﾊﾟｲﾌﾟ	1	
-	210F0-60331		PIPE VFM425	ﾊﾟｲﾌﾟ	1	
-	210F0-60341		PIPE VFM450	ﾊﾟｲﾌﾟ	1	
-	210F0-60351		PIPE VFM475	ﾊﾟｲﾌﾟ	1	
-	210F0-60361		PIPE VFM500	ﾊﾟｲﾌﾟ	1	
-	210F0-60371		PIPE VFM550	ﾊﾟｲﾌﾟ	1	
-	210F0-60381		PIPE VFM600	ﾊﾟｲﾌﾟ	1	
17	01183-06016		BOLT & WASHER	ﾎﾞﾙﾄ & ﾜｯｼｬ	1	(VFM200-375)
-	01183-06016		BOLT & WASHER	ﾎﾞﾙﾄ & ﾜｯｼｬ	2	(VFM400-500)
-	01183-06016		BOLT & WASHER	ﾎﾞﾙﾄ & ﾜｯｼｬ	3	(VFM550-600)
A4	216G8-41001		REGULATOR-ASSY	ﾚｷﾞｭﾚｰﾀｱｯｾﾝ	1	INC.18-27
18	210F8-43031		PLATE	ﾌﾟﾚｰﾄ	1	
19	27979-43101		SPRING	ｽﾌﾟﾘﾝｸﾞ	1	
20	216G8-42121		NIPPLE	ﾆｯﾌﾟﾙ	1	
21	03300-00280		O-RING	Oﾘﾝｸﾞ	1	
22	214A8-43011		CASE	ｹｰｽ	1	
23	216G8-42111		SLEEVE	ｽﾘｰﾌﾞ	1	
24	24459-42921		PISTON	ﾋﾟｽﾄﾝ	1	
25	24459-42951		BALL,NYLON	ﾎﾞｰﾙ	1	
26	214A8-44151		SPRING	ｽﾌﾟﾘﾝｸﾞ	1	

FIG.187 MAST PIPING [VFM18G]

(M5010530) マストパイピング

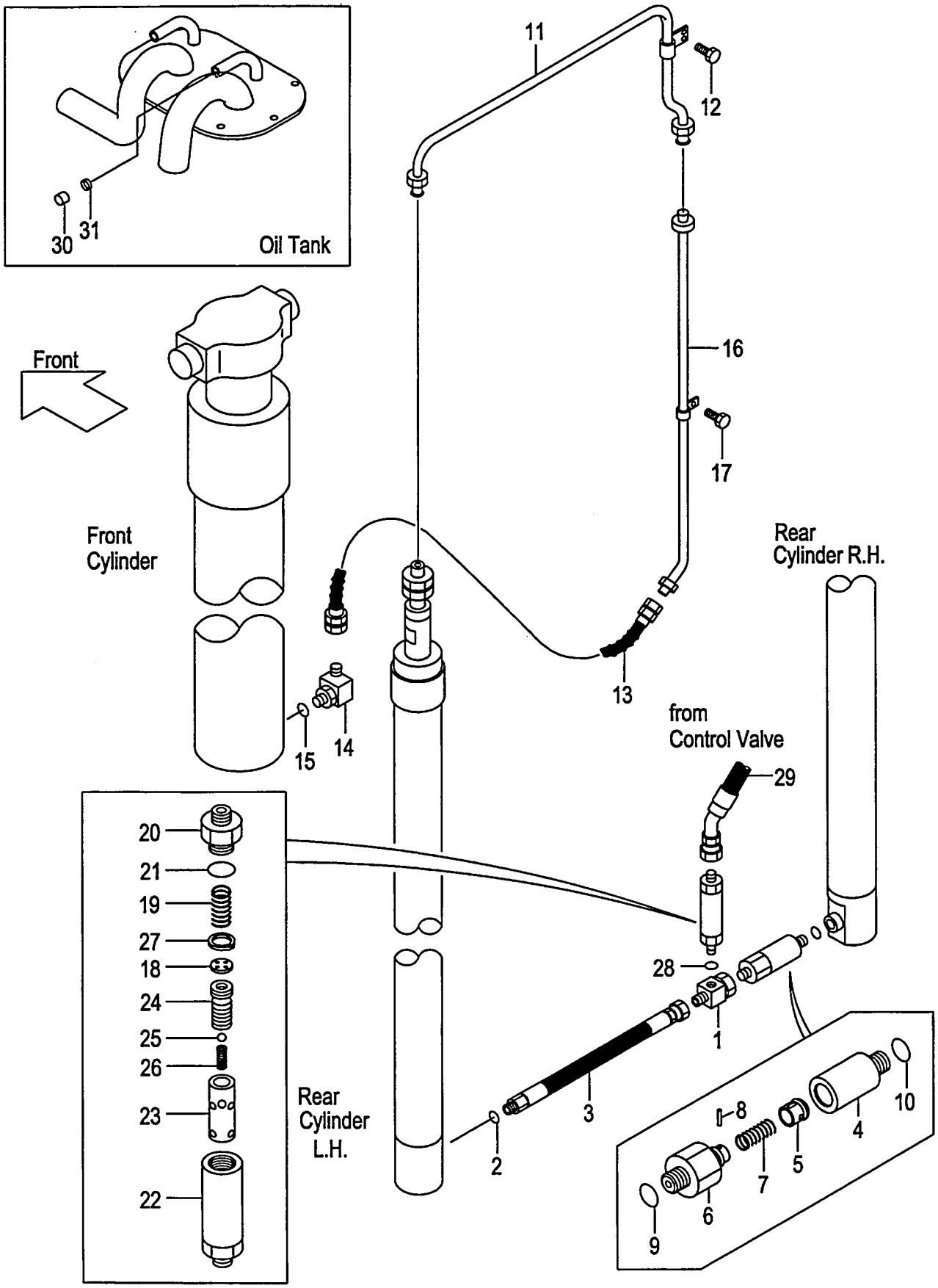

A:VFM18G(1T)
B:VFM18G(1.5T)
C:VFM18G(1.8T)

FIG.187
(M5010530)

Item No	Part No.	Mark	Description		Req'd	Remarks : Serial No.
27	02110-00018		RING,SNAP	ｽﾅｯﾌﾟﾘﾝｸﾞ	1	
28	03320-00180		O-RING	Oﾘﾝｸﾞ	1	
29	216G8-02502		HOSE	ﾎｰｽ	1	
30	55593-62551		CAP	ｷｬｯﾌﾟ	1	
31	04914-00019		CLIP	ｸﾘｯﾌﾟ	1	

FIG.188 FORK [VFHM18G]

(M5018140) フォーク

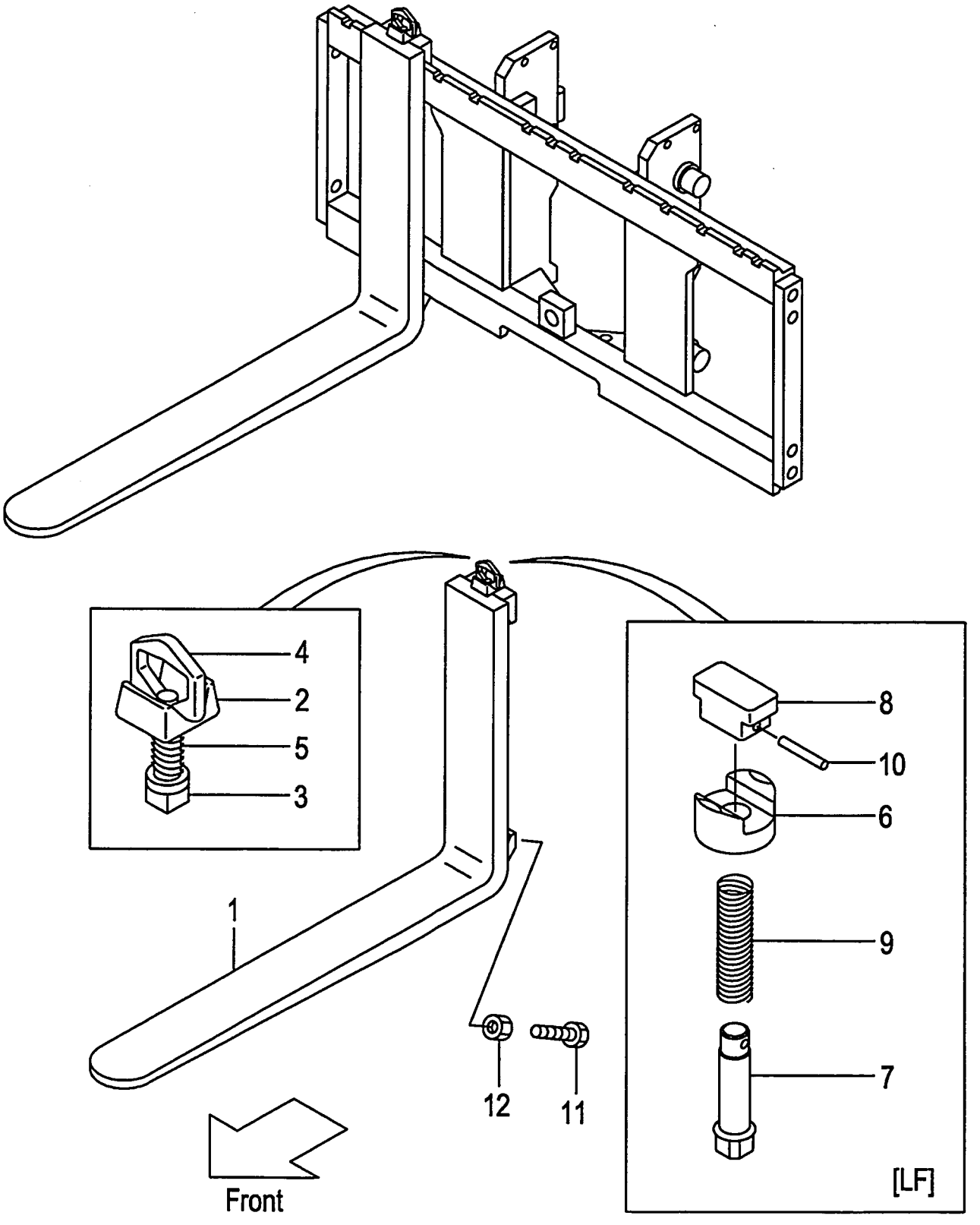

A:VFHM18G(1T)
B:VFHM18G(1.5T)
C:VFHM18G(1.8T)

FIG.188
(M5018140)

Item No	Part No.	Mark	Description	Req'd	Remarks : Serial No.
1	210B8-10502		FORK フォーク	2	A (L=770) INC.6-10
-	210B8-10502		FORK フォーク	2	A [LF077] INC.6-10
-	210B8-10512		FORK フォーク	2	A [LF085] INC.6-10
-	210F8-10502		FORK フォーク	2	B,C [LF085] INC.6-10
-	210F8-10572		FORK フォーク	2	[LF090] INC.6-10
-	210F8-10512		FORK フォーク	2	B,C (L=920) INC.6-10
-	210B8-10522		FORK フォーク	2	A [LF092] INC.6-10
-	210F8-10512		FORK フォーク	2	B,C [LF092] INC.6-10
-	210F8-10512		FORK フォーク	2	[EX](L=920) INC.6-10
-	210F8-10582		FORK フォーク	2	[LF100] INC.6-10
-	210F8-10522		FORK フォーク	2	[LF107] INC.6-10
-	210F8-10592		FORK フォーク	2	[LF110] INC.6-10
-	210F8-10602		FORK フォーク	2	[LF120] INC.6-10
-	210F8-10532		FORK フォーク	2	[LF122] INC.6-10
-	210H8-10612		FORK フォーク	2	[LF130] INC.6-10
-	210H8-10532		FORK フォーク	2	[LF137] INC.6-10
-	210H8-10622		FORK フォーク	2	[LF140] INC.6-10
-	210H8-10632		FORK フォーク	2	[LF150] INC.6-10
-	210H8-10542		FORK フォーク	2	[LF152] INC.6-10
-	210H8-10642		FORK フォーク	2	[LF160] INC.6-10
-	210H8-10552		FORK フォーク	2	[LF167] INC.6-10
-	216B8-10301		FORK フォーク	2	A [LFD077] INC.2-5
-	216B8-10311		FORK フォーク	2	A [LFD085] INC.2-5
-	216G8-10301		FORK フォーク	2	B [LFD085] INC.2-5
-	216K8-10361		FORK フォーク	2	C [LFD085] INC.2-5
-	216G8-10371		FORK フォーク	2	A,B [LFD090] INC.2-5
-	216K8-10371		FORK フォーク	2	C [LFD090] INC.2-5
-	216B8-10321		FORK フォーク	2	A [LFD092] INC.2-5
-	216G8-10311		FORK フォーク	2	B [LFD092] INC.2-5
-	216K8-10301		FORK フォーク	2	C [LFD092] INC.2-5
-	216G8-10381		FORK フォーク	2	A,B [LFD100] INC.2-5
-	216K8-10381		FORK フォーク	2	C [LFD100] INC.2-5

FIG.188 FORK [VFHM18G]

(M5018140) フォーク

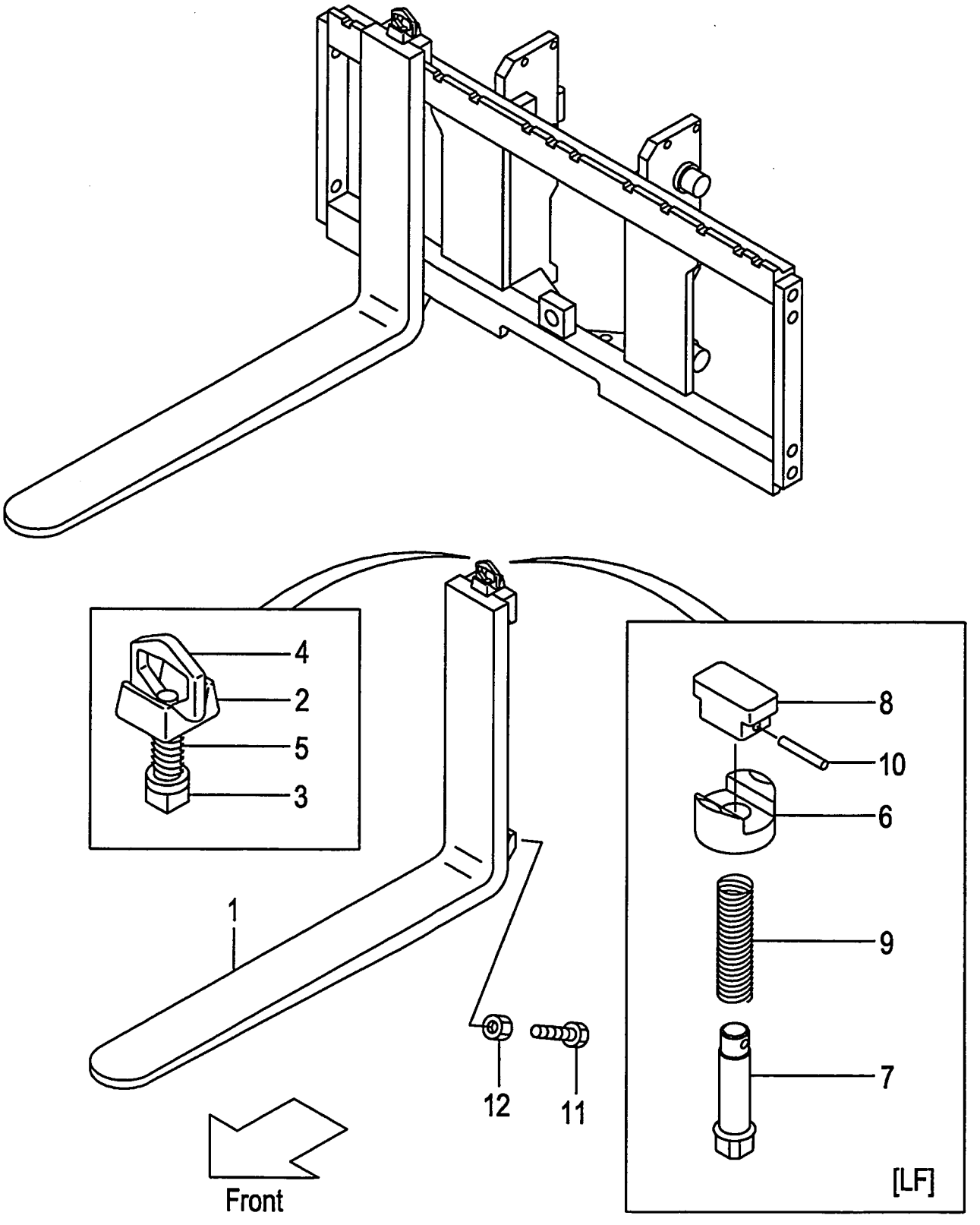

A:VFHM18G(1T)
B:VFHM18G(1.5T)
C:VFHM18G(1.8T)

FIG.188
(M5018140)

Item No	Part No.	Mark	Description		Req'd	Remarks : Serial No.
-	216G8-10321		FORK	ﾌｫｰｸ	2	A,B [LFD107] INC.2-5
-	216K8-10311		FORK	ﾌｫｰｸ	2	C [LFD107] INC.2-5
-	216G8-10391		FORK	ﾌｫｰｸ	2	A,B [LFD110] INC.2-5
-	216K8-10391		FORK	ﾌｫｰｸ	2	C [LFD110] INC.2-5
-	216G8-10401		FORK	ﾌｫｰｸ	2	A,B [LFD120] INC.2-5
-	216K8-10401		FORK	ﾌｫｰｸ	2	C [LFD120] INC.2-5
-	216G8-10331		FORK	ﾌｫｰｸ	2	A,B [LFD122] INC.2-5
-	216K8-10321		FORK	ﾌｫｰｸ	2	C [LFD122] INC.2-5
-	216G8-10411		FORK	ﾌｫｰｸ	2	A,B [LFD130] INC.2-5
-	216K8-10411		FORK	ﾌｫｰｸ	2	C [LFD130] INC.2-5
-	216G8-10341		FORK	ﾌｫｰｸ	2	A,B [LFD137] INC.2-5
-	216K8-10331		FORK	ﾌｫｰｸ	2	C [LFD137] INC.2-5
-	216G8-10421		FORK	ﾌｫｰｸ	2	A,B [LFD140] INC.2-5
-	216K8-10421		FORK	ﾌｫｰｸ	2	C [LFD140] INC.2-5
-	216G8-10431		FORK	ﾌｫｰｸ	2	A,B [LFD150] INC.2-5
-	216K8-10431		FORK	ﾌｫｰｸ	2	C [LFD150] INC.2-5
-	216G8-10351		FORK	ﾌｫｰｸ	2	A,B [LFD152] INC.2-5
-	216K8-10341		FORK	ﾌｫｰｸ	2	C [LFD152] INC.2-5
-	216G8-10441		FORK	ﾌｫｰｸ	2	A,B [LFD160] INC.2-5
-	216K8-10441		FORK	ﾌｫｰｸ	2	C [LFD160] INC.2-5
-	216G8-10361		FORK	ﾌｫｰｸ	2	B [LFD167] INC.2-5
-	216K8-10351		FORK	ﾌｫｰｸ	2	C [LFD167] INC.2-5
A1	214A8-11001		STOPPER-ASSY	ｽﾄｯﾊﾟｱｯｾﾝ	2	[LFD] INC.2-5
2	214A8-12001		HEAD	ﾍｯﾄﾞ	2	[LFD]
3	214A8-12011		STOPPER	ｽﾄｯﾊﾟ	2	[LFD]
4	214A8-12021		HANDLE	ﾊﾝﾄﾞﾙ	2	[LFD]
5	214A8-12031		SPRING	ｽﾌﾟﾘﾝｸﾞ	2	[LFD]
6	216G8-12921		HOLDER	ﾎﾙﾀﾞ	2	[LF]

FIG.188 FORK [VFHM18G]

(M5018140) フォーク

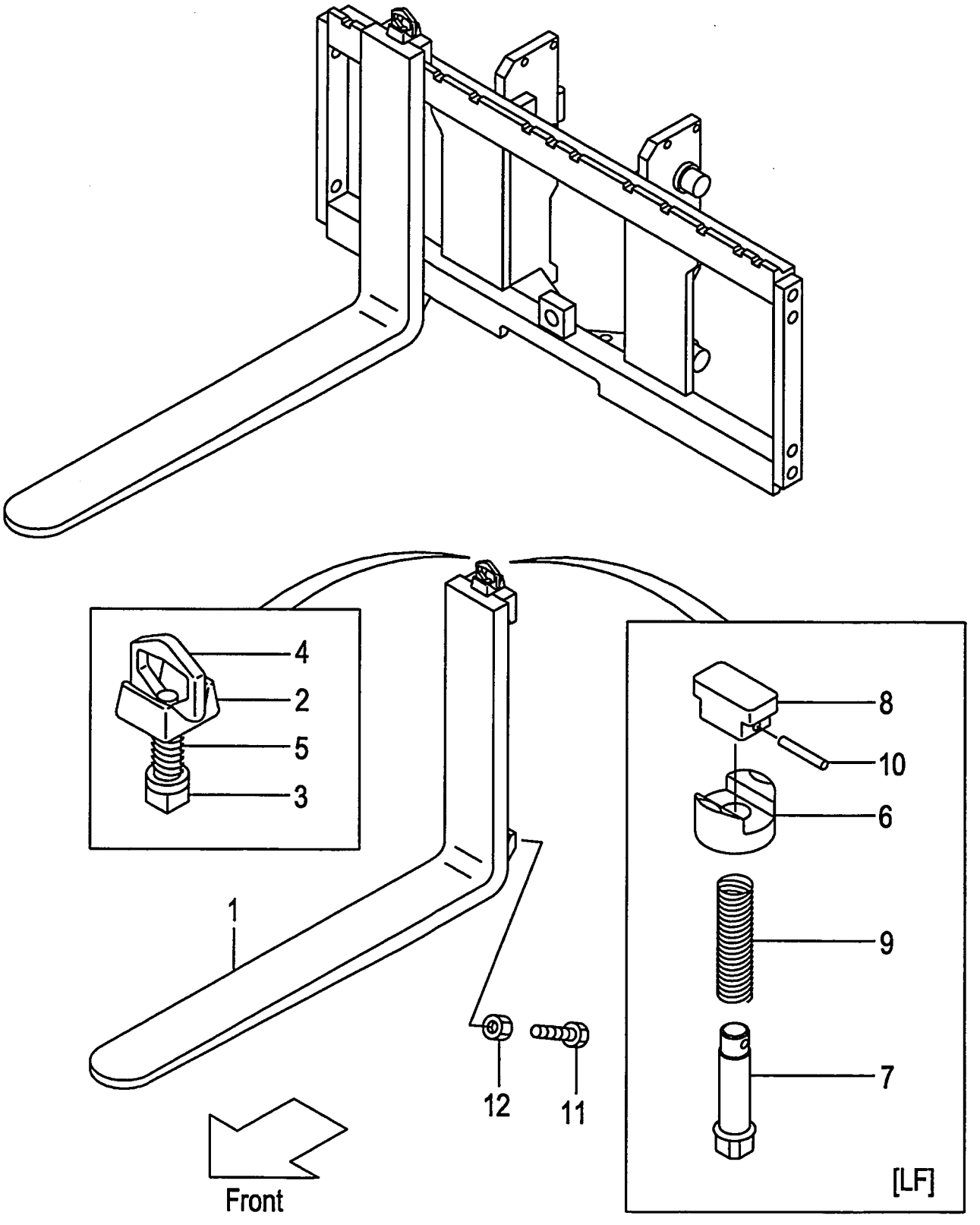

A:VFHM18G(1T)
B:VFHM18G(1.5T)
C:VFHM18G(1.8T)

FIG.188
(M5018140)

Item No	Part No.	Mark	Description		Req'd	Remarks : Serial No.
7	231A8-12001		PIN	ﾋﾟﾝ	2	[LF]
8	231A8-12011		KNOB	ﾉﾌﾞ	2	[LF]
9	231A8-12021		SPRING	ｽﾌﾟﾘﾝｸﾞ	2	[LF]
10	231A8-12031		PIN,SPRING	ﾋﾟﾝ	2	[LF]
11	216G8-12101		BOLT	ﾎﾞﾙﾄ	4	[LFD]
12	01402-00010		NUT	ﾅｯﾄ	4	[LFD]

FIG.189 LIFT BRACKET [VFHM18G]

(M5010910) リフトブラケット

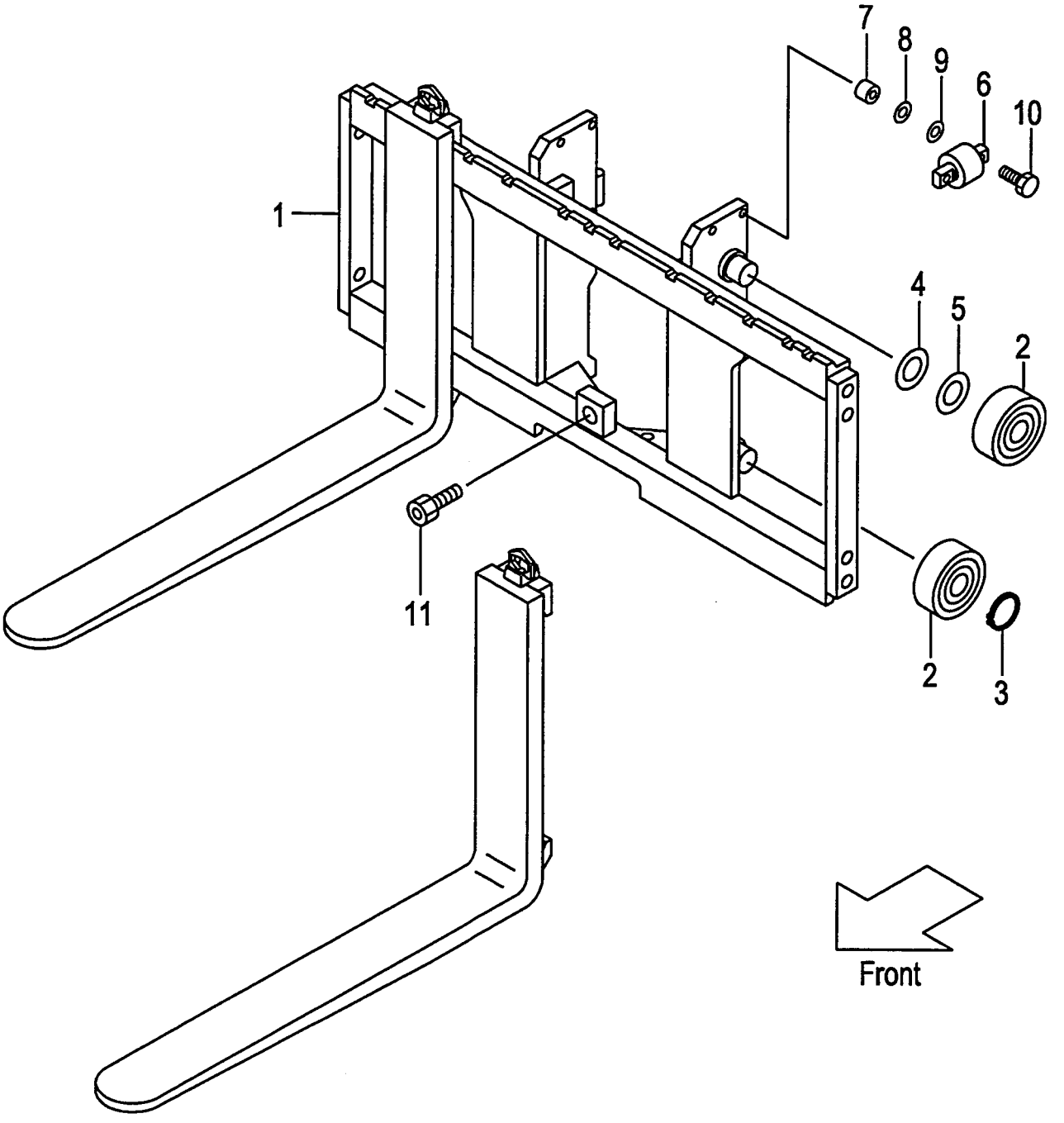

A:VFHM18G(1T)
B:VFHM18G(1.5T)
C:VFHM18G(1.8T)

FIG.189
(M5010910)

Item No	Part No.	Mark	Description		Req'd	Remarks : Serial No.
1	218G0-90101		BRACKET,LIFT	ﾌﾞﾗｹｯﾄ	1	
-	518G1-61501		BRACKET,LIFT	ﾌﾞﾗｹｯﾄ	1	[WFY110][WFY114][WFY127] [WFY135][WFY138]
-	518G1-61601		BRACKET,LIFT	ﾌﾞﾗｹｯﾄ	1	[WFY135][WFY138][WFY145] [WFY146][WFY154][WFY180]
2	211F8-22201		ROLLER,END,102.0	ﾛｰﾗ	4	
-	211F8-22211		ROLLER,END,102.5	ﾛｰﾗ	(4)	
-	511F3-74021		ROLLER,END,102.0	ﾛｰﾗ	4	[FC][CS35][FCS35][FCS55] [FCS45]
-	511F3-74031		ROLLER,END,102.5	ﾛｰﾗ	(4)	[FC][CS35][FCS35][FCS55] [FCS45]
3	02100-00035		RING,SNAP	ｽﾅｯﾌﾟﾘﾝｸﾞ	2	
4	211F8-22261		SHIM,T-0.5	ｼﾑ	4	
5	211F8-22271		SHIM,T-1.0	ｼﾑ	8	
6	22018-30304		ROLLER,SIDE	ﾛｰﾗ	2	
-	510F3-74001		ROLLER,SIDE	ﾛｰﾗ	2	[FC][CS35][FCS35][FCS55] [FCS45]
7	22578-32841		SPACER	ｽﾍﾟｰｻ	4	
8	22018-30261		SHIM	ｼﾑ	8	
9	22018-30121		SHIM	ｼﾑ	4	
10	01183-10050		BOLT & WASHER	ﾎﾞﾙﾄ & ﾜｯｼｬ	4	
11	01184-12025		BOLT & WASHER	ﾎﾞﾙﾄ & ﾜｯｼｬ	1	
12	210F0-93001	+	CHART,CAPACITY	ﾁｬｰﾄ	1	A (VFHM360-500)
-	210F0-93011	+	CHART,CAPACITY	ﾁｬｰﾄ	1	A (VFHM540-750)
-	210F0-93201	+	CHART,CAPACITY	ﾁｬｰﾄ	1	B (VFHM360-500)
-	210F0-93211	+	CHART,CAPACITY	ﾁｬｰﾄ	1	B (VFHM540-750)
-	210F0-93301	+	CHART,CAPACITY	ﾁｬｰﾄ	1	C (VFHM360-500)
-	210F0-93311	+	CHART,CAPACITY	ﾁｬｰﾄ	1	C (VFHM540-750)
-	524T3-84031	+	CHART,CAPACITY	ﾁｬｰﾄ	1	[EXR]
-	210F0-93031	+	CHART,CAPACITY	ﾁｬｰﾄ	1	A [EXA/VFHM360-500]
-	210F0-93041	+	CHART,CAPACITY	ﾁｬｰﾄ	1	A [EXA/VFHM540-750]
-	210F0-93231	+	CHART,CAPACITY	ﾁｬｰﾄ	1	B [EXA/VFHM360-500]
-	210F0-93241	+	CHART,CAPACITY	ﾁｬｰﾄ	1	B [EXA/VFHM540-750]
-	210F0-93331	+	CHART,CAPACITY	ﾁｬｰﾄ	1	C [EXA/VFHM360-500]
-	210F0-93341	+	CHART,CAPACITY	ﾁｬｰﾄ	1	C [EXA/VFHM540-750]
-	514A3-82301	+	CHART,CAPACITY	ﾁｬｰﾄ	1	[EXB][EXC][EXE][EXN]
-	514A3-82331	+	CHART,CAPACITY	ﾁｬｰﾄ	1	[EXB/SPANISH][EXE/SPANISH]
-	514A3-82341	+	CHART,CAPACITY	ﾁｬｰﾄ	1	[EXB/FRENCH][EXE/FRENCH]

FIG.189 LIFT BRACKET [VFHM18G]

(M5010910) リフトブラケット

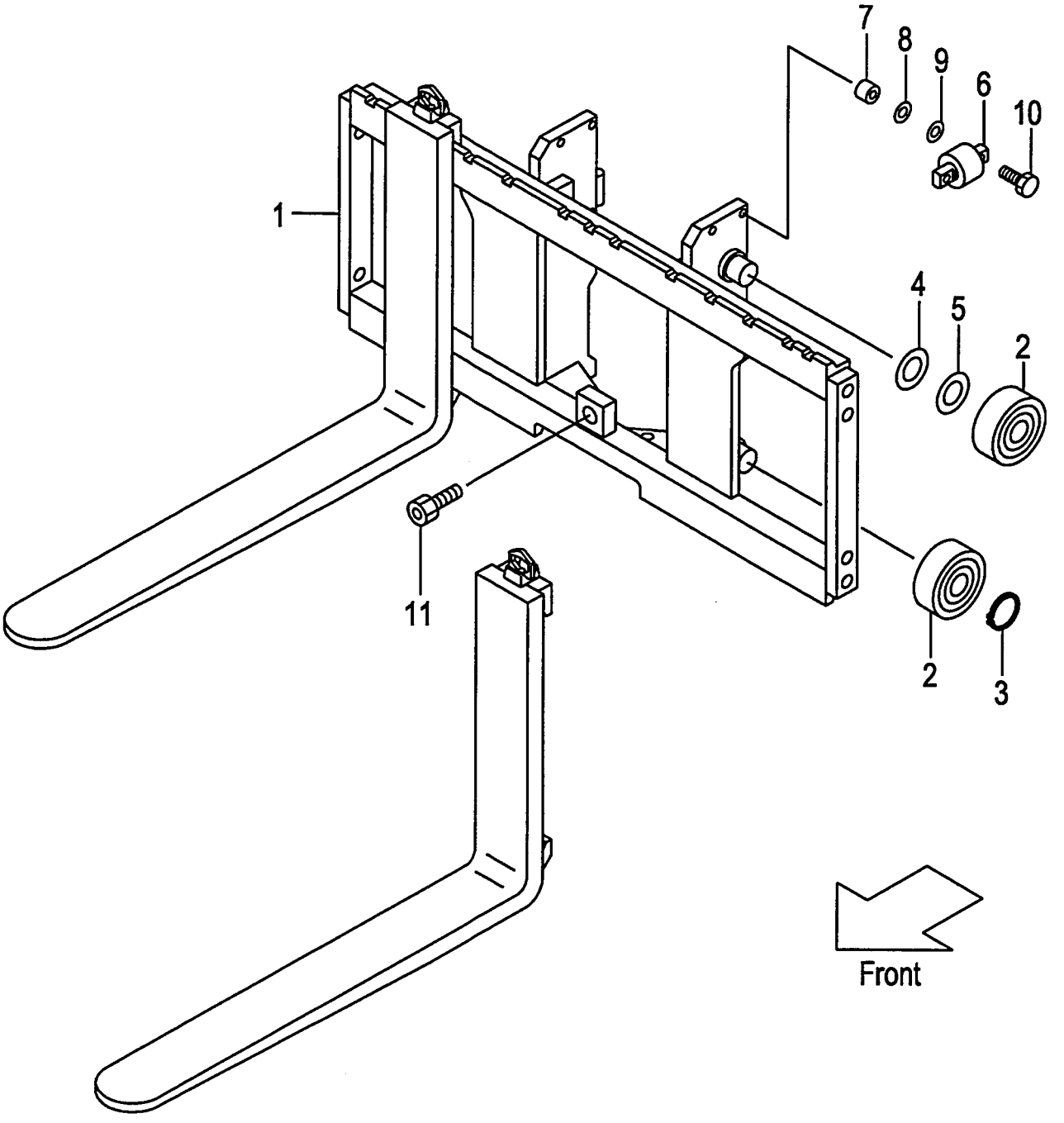

A:VFHM18G(1T)
B:VFHM18G(1.5T)
C:VFHM18G(1.8T)

FIG.189
(M5010910)

Item No	Part No.	Mark	Description	Req'd	Remarks : Serial No.
-	63110-18921	+	CHART,CAPACITY チャート	1	[EXB/CHINESE]
-	514A3-82321	+	CHART,CAPACITY チャート	1	[EXD/GERMAN]
-	514A3-82351	+	CHART,CAPACITY チャート	1	[EXEEC/DUTCH]
-	514A3-82361	+	CHART,CAPACITY チャート	1	[EXEEC/DANISH][EXNEC/DANISH]
-	514A3-82371	+	CHART,CAPACITY チャート	1	[EXEEC/ITALIAN]
-	514A3-82381	+	CHART,CAPACITY チャート	1	[EXEEC/GREEK]
-	514A3-82391	+	CHART,CAPACITY チャート	1	[EXEEC/PORTUGUESE]
-	529F3-82111	+	CHART,CAPACITY チャート	1	[EXNEC/SWEDISH]
-	529F3-82101	+	CHART,CAPACITY チャート	1	[EXNEC/FINNISH]
13	02432-01008	+	RIVET リベット	4	

FIG.190 BACKREST [VFHM18G]

(M5018260) ﾊﾞｯｸﾚｽﾄ

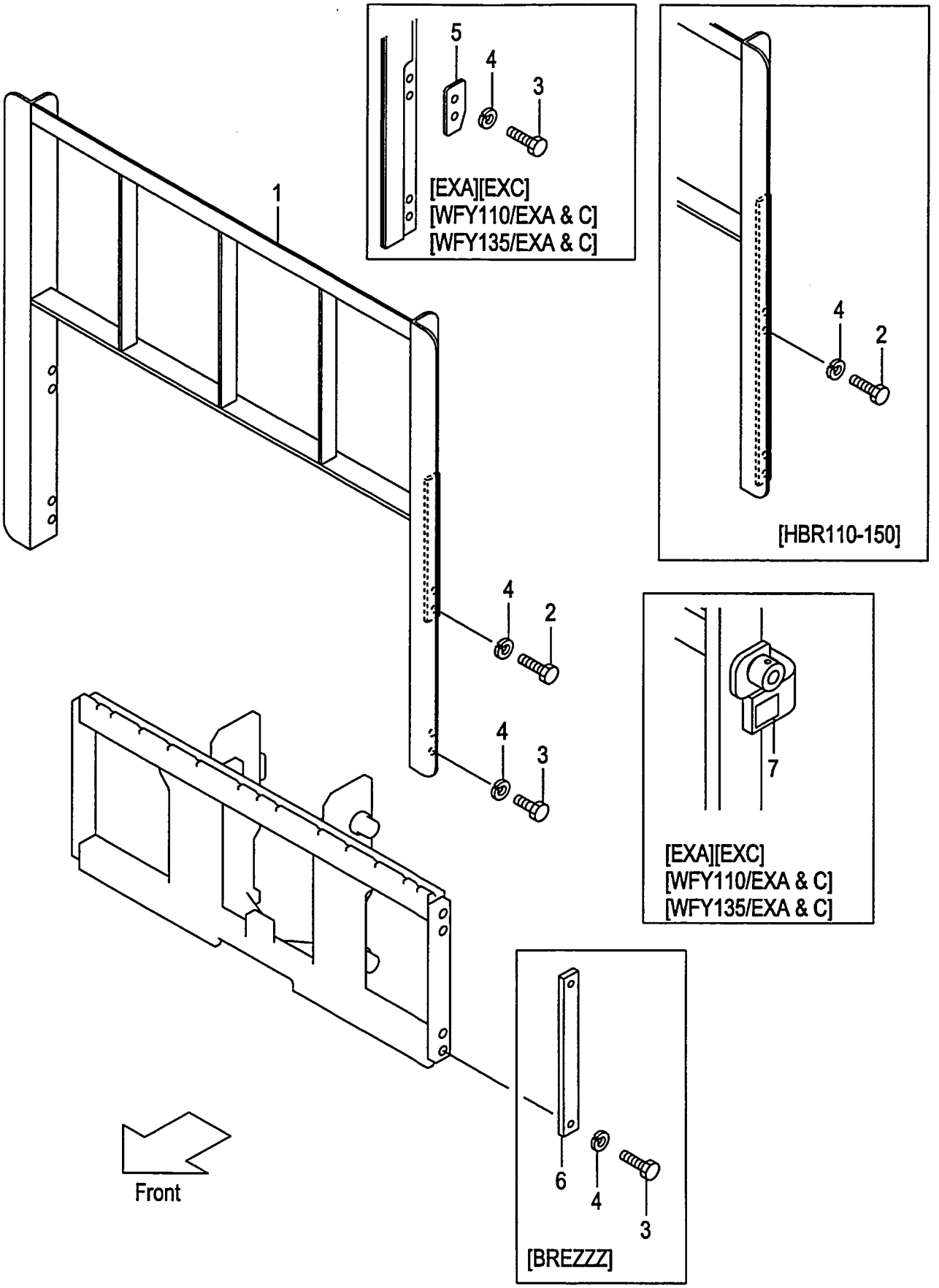

A:VFHM18G(1T)
B:VFHM18G(1.5T)
C:VFHM18G(1.8T)

FIG.190
(M5018260)

Item No	Part No.	Mark	Description		Req'd	Remarks : Serial No.
1	216G8-22201		BACKREST	ﾊﾞｯｸﾚｽﾄ	1	
-	516G2-74301		BACKREST	ﾊﾞｯｸﾚｽﾄ	1	[EXA][EXC][HBR048][HBR048]
-	216G8-22301		BACKREST	ﾊﾞｯｸﾚｽﾄ	1	[HBR110]
-	216G8-22311		BACKREST	ﾊﾞｯｸﾚｽﾄ	1	[HBR120]
-	216G8-22321		BACKREST	ﾊﾞｯｸﾚｽﾄ	1	[HBR130]
-	216G8-22331		BACKREST	ﾊﾞｯｸﾚｽﾄ	1	[HBR140]
-	216G8-22341		BACKREST	ﾊﾞｯｸﾚｽﾄ	1	[HBR150]
-	516G1-64301		BACKREST	ﾊﾞｯｸﾚｽﾄ	1	[WFY110]
-	516G1-64351		BACKREST	ﾊﾞｯｸﾚｽﾄ	1	[WFY135]
-	516G2-74101		BACKREST	ﾊﾞｯｸﾚｽﾄ	1	[WFY110/EXA][WFY110/EXC]
-	516G2-74201		BACKREST	ﾊﾞｯｸﾚｽﾄ	1	[WFY135/EXA][WFY135/EXC]
2	01100-14030		BOLT	ﾎﾞﾙﾄ	4	(WITHOUT BREZZZ)
-	01100-14035		BOLT	ﾎﾞﾙﾄ	4	[EXA][EXC][HBR048]
						[WFY110/EXA&C][WFY135/EXA&C]
-	01100-14030		BOLT	ﾎﾞﾙﾄ	8	[HRB110-150]
3	01100-14025		BOLT	ﾎﾞﾙﾄ	4	(WITHOUT HBR110-150)
4	02010-00014		WASHER	ﾜｯｼｬ	8	
-	02010-00014		WASHER	ﾜｯｼｬ	4	[BREZZZ]
5	534A2-74051		PLATE	ﾌﾟﾚｰﾄ	2	[EXA][EXC][HBR048]
						[WFY110/EXA&C][WFY135/EXA&C]
6	23659-42161		PLATE	ﾌﾟﾚｰﾄ	2	[BREZZZ]
7	534A2-74301		DECAL,CAUTION	ﾃﾞｶﾙ	1	[EXA][EXC][HBR048]
						[WFY110/EXA&C][WFY135/EXA&C]

FIG.191 MAST [VFHM18G]

(M5010710) マスト

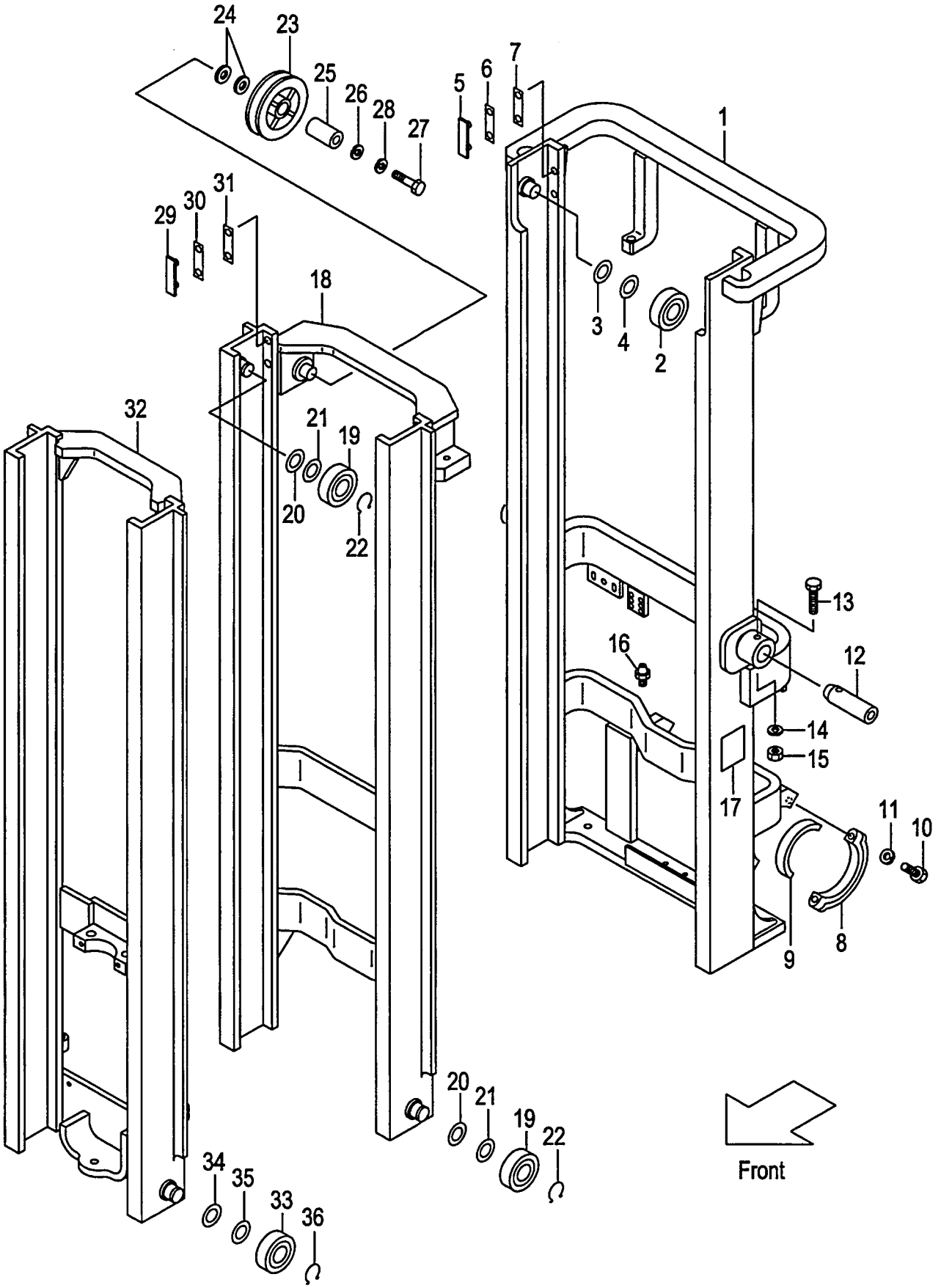

A:VFHM18G(1T)
B:VFHM18G(1.5T)
C:VFHM18G(1.8T)

FIG.191
(M5010710)

Item No	Part No.	Mark	Description		Req'd	Remarks : Serial No.
1	218G0-70111		MAST,OUTER VFHM360	ｱｳﾀﾏｽﾄ	1	
-	218G0-70121		MAST,OUTER VFHM400	ｱｳﾀﾏｽﾄ	1	
-	218G0-70101		MAST,OUTER VFHM435	ｱｳﾀﾏｽﾄ	1	
-	218G0-70131		MAST,OUTER VFHM480	ｱｳﾀﾏｽﾄ	1	
-	218G0-70141		MAST,OUTER VFHM500	ｱｳﾀﾏｽﾄ	1	
-	218G0-70151		MAST,OUTER VFHM540	ｱｳﾀﾏｽﾄ	1	
-	218G0-70161		MAST,OUTER VFHM550	ｱｳﾀﾏｽﾄ	1	
-	218G0-70171		MAST,OUTER VFHM600	ｱｳﾀﾏｽﾄ	1	
-	218G0-70181		MAST,OUTER VFHM650	ｱｳﾀﾏｽﾄ	1	
-	218G0-70191		MAST,OUTER VFHM700	ｱｳﾀﾏｽﾄ	1	
-	218G0-70201		MAST,OUTER VFHM750	ｱｳﾀﾏｽﾄ	1	
-	518G3-91411		MAST,OUTER VFHM360	ｱｳﾀﾏｽﾄ	1	[EXR][RW][HC]
-	518G3-91421		MAST,OUTER VFHM400	ｱｳﾀﾏｽﾄ	1	[EXR][RW][HC]
-	518G3-91401		MAST,OUTER VFHM435	ｱｳﾀﾏｽﾄ	1	[EXR][RW][HC]
-	518G3-91431		MAST,OUTER VFHM480	ｱｳﾀﾏｽﾄ	1	[EXR][RW][HC]
-	518G3-91441		MAST,OUTER VFHM500	ｱｳﾀﾏｽﾄ	1	[EXR][RW][HC]
-	518G3-91451		MAST,OUTER VFHM540	ｱｳﾀﾏｽﾄ	1	[EXR][RW][HC]
-	518G3-91461		MAST,OUTER VFHM550	ｱｳﾀﾏｽﾄ	1	[EXR][RW][HC]
-	518G3-91471		MAST,OUTER VFHM600	ｱｳﾀﾏｽﾄ	1	[EXR][RW][HC]
-	518G3-91481		MAST,OUTER VFHM650	ｱｳﾀﾏｽﾄ	1	[EXR][RW][HC]
-	518G3-91491		MAST,OUTER VFHM700	ｱｳﾀﾏｽﾄ	1	[EXR][RW][HC]
-	518G3-91501		MAST,OUTER VFHM750	ｱｳﾀﾏｽﾄ	1	[EXR][RW][HC]
2	211F8-22221		ROLLER,END,102.0	ﾛｰﾗ	2	
-	211F8-22231		ROLLER,END,102.5	ﾛｰﾗ	(2)	
-	511F3-74021		ROLLER,END,102.0	ﾛｰﾗ	2	[FC][CS35][FCS35][FCS55] [FCS45]
-	511F3-74031		ROLLER,END,102.5	ﾛｰﾗ	(2)	[FC][CS35][FCS35][FCS55] [FCS45]
3	211F8-22261		SHIM,T-0.5	ｼﾑ	4	
4	211F8-22271		SHIM,T-1.0	ｼﾑ	8	
5	216G8-33401		SLIPPER	ｽﾘｯﾊﾟ	2	
6	216G8-33361		SHIM,T-0.5	ｼﾑ	8	
7	216G8-33371		SHIM,T-1.0	ｼﾑ	4	
8	210F6-12441		CAP	ｷｬｯﾌﾟ	2	
9	216G8-02001		BUSHING	ﾌﾞｯｼﾝｸﾞ	2	
10	01100-14065		BOLT	ﾎﾞﾙﾄ	4	
11	02010-00014		WASHER	ﾜｯｼｬ	4	
12	210F8-02102		PIN	ﾋﾟﾝ	2	
13	216G8-52321		BOLT	ﾎﾞﾙﾄ	2	
14	02010-20012		WASHER	ﾜｯｼｬ	2	
15	234A8-42571		NUT	ﾅｯﾄ	2	
16	04901-00100		FITTING	ﾌｨｯﾃｨﾝｸﾞ	2	
17	23678-06002		PLATE,NAME	ﾌﾟﾚｰﾄ	1	
18	211F0-70312		MAST,MIDDLE VFHM360	ﾐﾄﾞﾙﾏｽﾄ	1	
-	211F0-70322		MAST,MIDDLE VFHM400	ﾐﾄﾞﾙﾏｽﾄ	1	
-	211F0-70302		MAST,MIDDLE VFHM435	ﾐﾄﾞﾙﾏｽﾄ	1	
-	211F0-70332		MAST,MIDDLE VFHM480	ﾐﾄﾞﾙﾏｽﾄ	1	
-	211F0-70342		MAST,MIDDLE VFHM500	ﾐﾄﾞﾙﾏｽﾄ	1	
-	211F0-70352		MAST,MIDDLE VFHM540	ﾐﾄﾞﾙﾏｽﾄ	1	
-	211F0-70362		MAST,MIDDLE VFHM550	ﾐﾄﾞﾙﾏｽﾄ	1	

FIG.191 MAST [VFHM18G]

(M5010710) マスト

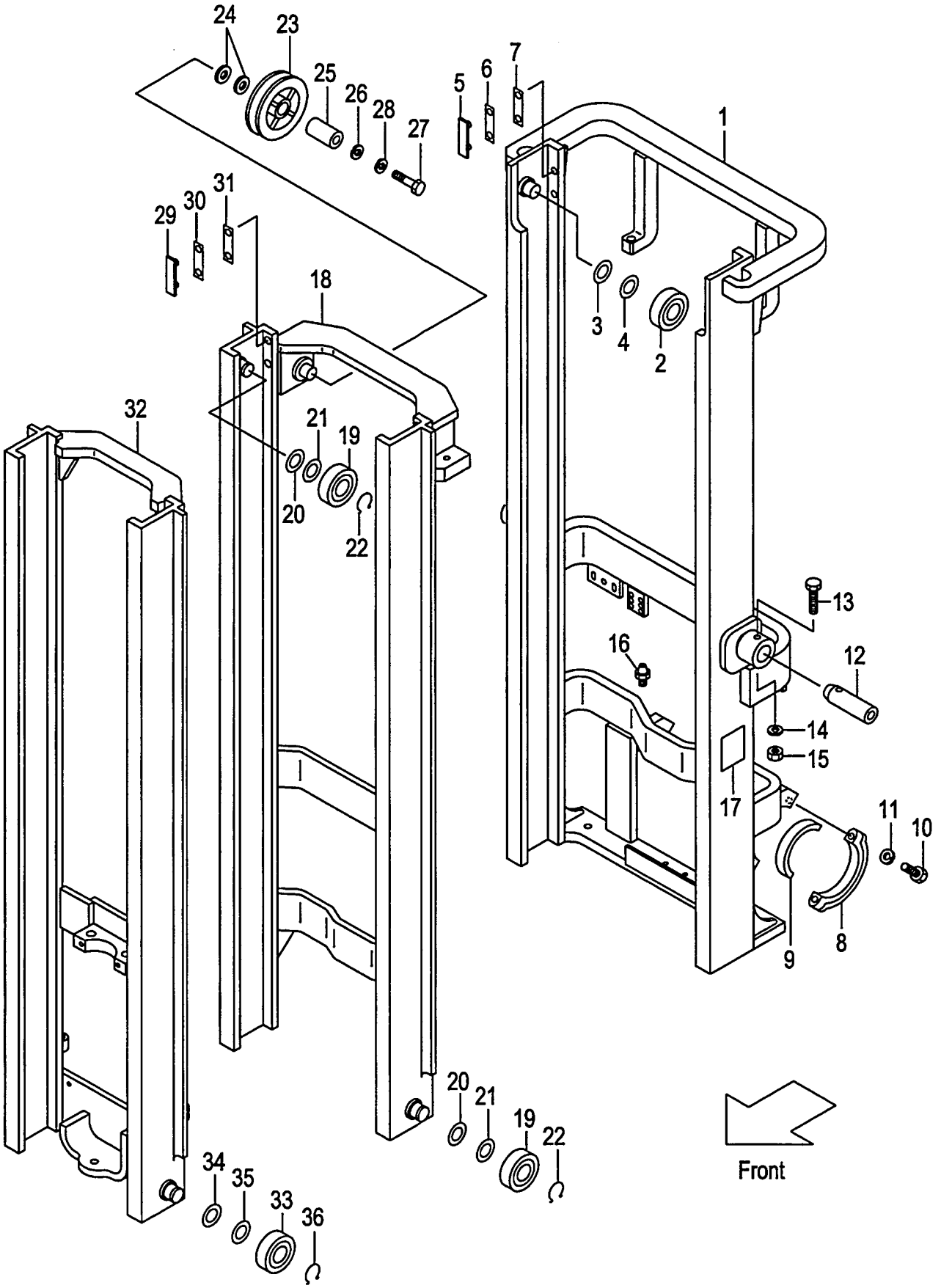

A:VFHM18G(1T)
B:VFHM18G(1.5T)
C:VFHM18G(1.8T)

FIG.191
(M5010710)

Item No	Part No.	Mark	Description		Req'd	Remarks : Serial No.
-	211F0-70372		MAST,MIDDLE VFHM600	ﾐﾄﾞﾙﾏｽﾄ	1	
-	211F0-70382		MAST,MIDDLE VFHM650	ﾐﾄﾞﾙﾏｽﾄ	1	
-	211F0-70392		MAST,MIDDLE VFHM700	ﾐﾄﾞﾙﾏｽﾄ	1	
-	211F0-70402		MAST,MIDDLE VFHM750	ﾐﾄﾞﾙﾏｽﾄ	1	
19	211F8-22221		ROLLER,END,102.0	ﾛｰﾗ	4	
-	211F8-22231		ROLLER,END,102.5	ﾛｰﾗ	(4)	
-	511F3-74021		ROLLER,END,102.0	ﾛｰﾗ	4	[FC][CS35][FCS35][FCS55] [FCS45]
-	511F3-74031		ROLLER,END,102.5	ﾛｰﾗ	(4)	[FC][CS35][FCS35][FCS55] [FCS45]
20	211F8-22261		SHIM,T-0.5	ｼﾑ	8	
21	211F8-22271		SHIM,T-1.0	ｼﾑ	16	
22	09192-30035		RING,SNAP	ｽﾅｯﾌﾟﾘﾝｸﾞ	4	
23	63130-15301		PULLEY	ﾌﾟｰﾘ	1	
24	62050-12331		SPACER	ｽﾍﾟｰｻ	2	
25	214A0-72701		COLLAR	ｶﾗｰ	1	
26	02000-00016		WASHER	ﾜｯｼｬ	1	
27	01100-16060		BOLT	ﾎﾞﾙﾄ	1	
28	02010-00016		WASHER	ﾜｯｼｬ	1	
29	216G8-33351		SLIPPER	ｽﾘｯﾊﾟ	2	
30	216G8-33361		SHIM,T-0.5	ｼﾑ	16	
31	216G8-33371		SHIM,T-1.0	ｼﾑ	8	
32	218G0-70511		MAST,INNER VFHM360	ｲﾝﾅﾏｽﾄ	1	
-	218G0-70521		MAST,INNER VFHM400	ｲﾝﾅﾏｽﾄ	1	
-	218G0-70501		MAST,INNER VFHM435	ｲﾝﾅﾏｽﾄ	1	
-	218G0-70531		MAST,INNER VFHM480	ｲﾝﾅﾏｽﾄ	1	
-	218G0-70541		MAST,INNER VFHM500	ｲﾝﾅﾏｽﾄ	1	
-	218G0-70551		MAST,INNER VFHM540	ｲﾝﾅﾏｽﾄ	1	
-	218G0-70561		MAST,INNER VFHM550	ｲﾝﾅﾏｽﾄ	1	
-	218G0-70571		MAST,INNER VFHM600	ｲﾝﾅﾏｽﾄ	1	
-	218G0-70581		MAST,INNER VFHM650	ｲﾝﾅﾏｽﾄ	1	
-	218G0-70591		MAST,INNER VFHM700	ｲﾝﾅﾏｽﾄ	1	
-	218G0-70601		MAST,INNER VFHM750	ｲﾝﾅﾏｽﾄ	1	
33	211F8-22221		ROLLER,END,102.0	ﾛｰﾗ	2	
-	211F8-22231		ROLLER,END,102.5	ﾛｰﾗ	(2)	
-	511F3-74021		ROLLER,END,102.0	ﾛｰﾗ	2	[FC][CS35][FCS35][FCS55] [FCS45]
-	511F3-74031		ROLLER,END,102.5	ﾛｰﾗ	(2)	[FC][CS35][FCS35][FCS55] [FCS45]
34	211F8-22261		SHIM,T-0.5	ｼﾑ	4	
35	211F8-22271		SHIM,T-1.0	ｼﾑ	8	
36	09192-30035		RING,SNAP	ｽﾅｯﾌﾟﾘﾝｸﾞ	2	

FIG.192 TILT GAUGE [TG/VFHM18G]

(M5010720) ﾃｨﾙﾄｹﾞｰｼﾞ

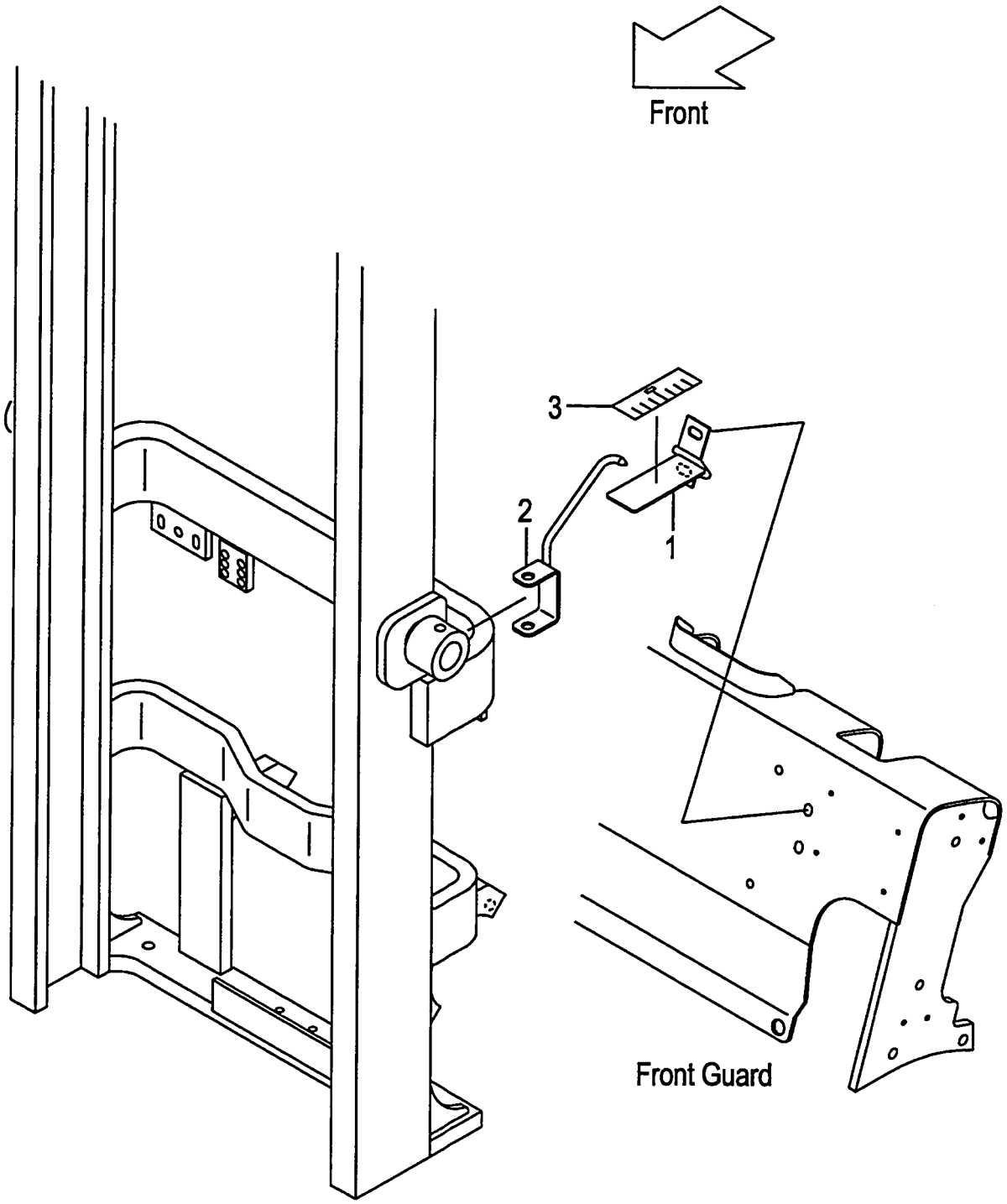

A:VFHM18G(1T)
B:VFHM18G(1.5T)
C:VFHM18G(1.8T)

FIG.192
(M5010720)

Item No	Part No.	Mark	Description		Req'd	Remarks : Serial No.
1	639A0-10011		GAUGE	ｹﾞｰｼﾞ	1	[TG][PPC][PR]
2	618G0-10051		INDICATER	ｲﾝｼﾞｹｰﾀ	1	[TG][PPC][PR]
3	62459-23371		SEAL,DUST	ｼｰﾙ	1	[TG][PPC][PR]

FIG.193 LIFT CYLINDER(FRONT) [VFHM18G]

(M5010810) リフトシリンダ(フロント)

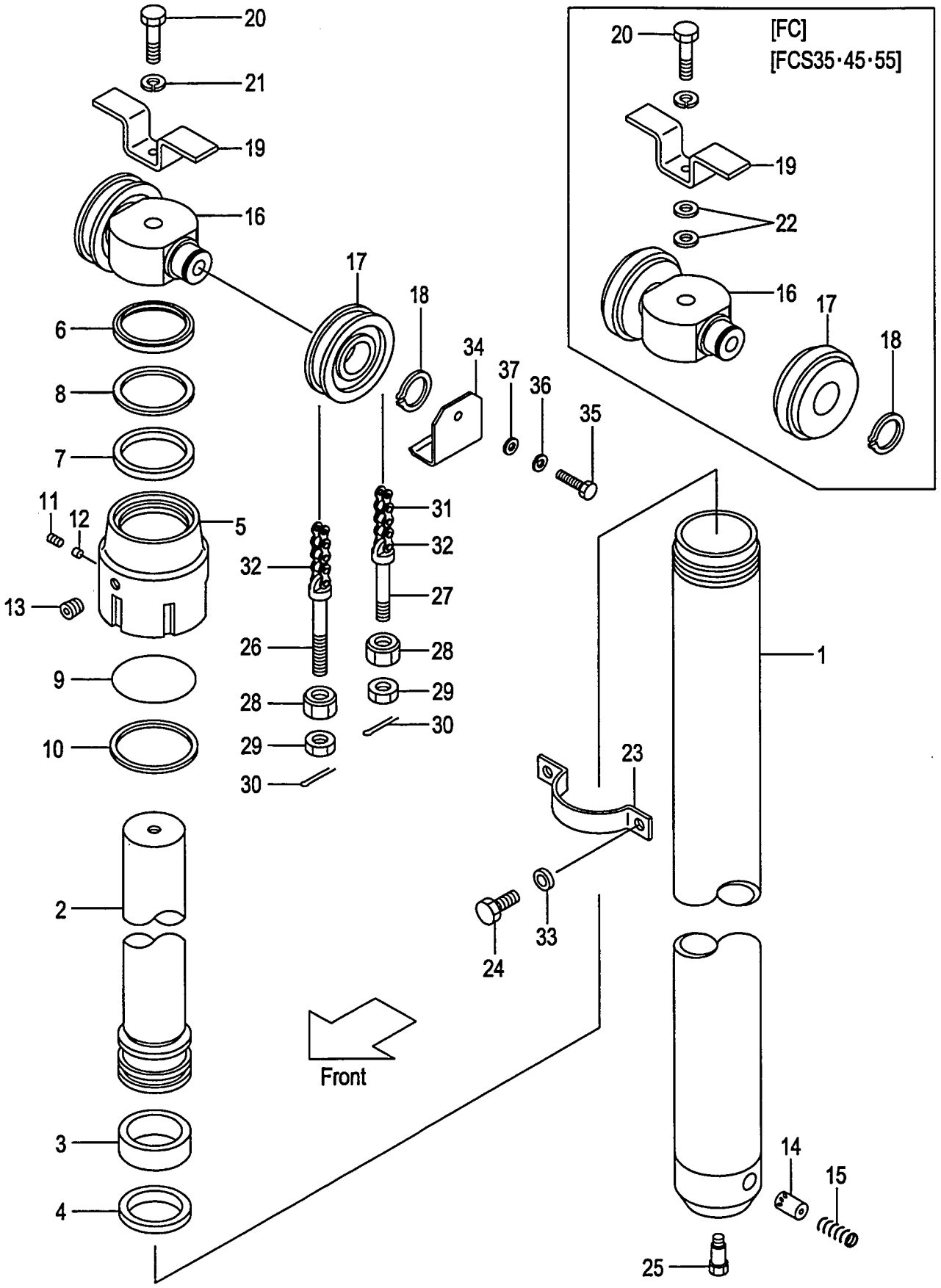

A:VFHM18G(1T)
B:VFHM18G(1.5T)
C:VFHM18G(1.8T)

FIG.193
(M5010810)

Item No	Part No.	Mark	Description		Req'd	Remarks : Serial No.
A1	211F0-50131		CYL-ASSY,LIFT VFHM360	ｼﾘﾝﾀﾞｱｯｾﾝ	1	INC.1-15
-	211F0-50151		CYL-ASSY,LIFT VFHM400	ｼﾘﾝﾀﾞｱｯｾﾝ	1	INC.1-15
-	211F0-50101		CYL-ASSY,LIFT VFHM435	ｼﾘﾝﾀﾞｱｯｾﾝ	1	INC.1-15
-	211F0-50171		CYL-ASSY,LIFT VFHM480	ｼﾘﾝﾀﾞｱｯｾﾝ	1	INC.1-15
-	211F0-50181		CYL-ASSY,LIFT VFHM500	ｼﾘﾝﾀﾞｱｯｾﾝ	1	INC.1-15
-	211F0-50211		CYL-ASSY,LIFT VFHM540	ｼﾘﾝﾀﾞｱｯｾﾝ	1	INC.1-15
-	211F0-80161		CYL-ASSY,LIFT VFHM550	ｼﾘﾝﾀﾞｱｯｾﾝ	1	INC.1-15
-	211F0-80171		CYL-ASSY,LIFT VFHM600	ｼﾘﾝﾀﾞｱｯｾﾝ	1	INC.1-15
-	211F0-80181		CYL-ASSY,LIFT VFHM650	ｼﾘﾝﾀﾞｱｯｾﾝ	1	INC.1-15
-	211F0-80191		CYL-ASSY,LIFT VFHM700	ｼﾘﾝﾀﾞｱｯｾﾝ	1	INC.1-15
-	211F0-80201		CYL-ASSY,LIFT VFHM750	ｼﾘﾝﾀﾞｱｯｾﾝ	1	INC.1-15
1	211F0-50331		TUBE VFHM360	ﾁｭｰﾌﾞ	1	
-	211F0-50351		TUBE VFHM400	ﾁｭｰﾌﾞ	1	
-	211F0-50301		TUBE VFHM435	ﾁｭｰﾌﾞ	1	
-	211F0-50371		TUBE VFHM480	ﾁｭｰﾌﾞ	1	
-	211F0-50381		TUBE VFHM500	ﾁｭｰﾌﾞ	1	
-	211F0-50411		TUBE VFHM540	ﾁｭｰﾌﾞ	1	
-	211F0-80361		TUBE VFHM550	ﾁｭｰﾌﾞ	1	
-	211F0-80371		TUBE VFHM600	ﾁｭｰﾌﾞ	1	
-	211F0-80381		TUBE VFHM650	ﾁｭｰﾌﾞ	1	
-	211F0-80391		TUBE VFHM700	ﾁｭｰﾌﾞ	1	
-	211F0-80401		TUBE VFHM750	ﾁｭｰﾌﾞ	1	
2	54238-40311		ROD,PISTON VFHM360	ﾛｯﾄﾞ	1	
-	54238-40321		ROD,PISTON VFHM400	ﾛｯﾄﾞ	1	
-	54238-40301		ROD,PISTON VFHM435	ﾛｯﾄﾞ	1	
-	54238-40331		ROD,PISTON VFHM480	ﾛｯﾄﾞ	1	
-	54238-40341		ROD,PISTON VFHM500	ﾛｯﾄﾞ	1	
-	54238-40351		ROD,PISTON VFHM540	ﾛｯﾄﾞ	1	
-	210F0-81261		ROD,PISTON VFHM550	ﾛｯﾄﾞ	1	
-	54238-40361		ROD,PISTON VFHM600	ﾛｯﾄﾞ	1	
-	210F0-81281		ROD,PISTON VFHM650	ﾛｯﾄﾞ	1	
-	210F0-81291		ROD,PISTON VFHM700	ﾛｯﾄﾞ	1	
-	210F0-81301		ROD,PISTON VFHM750	ﾛｯﾄﾞ	1	
3	22518-40121	*	WEARING	ｳｪｱﾘﾝｸﾞ	1	
4	54238-42011	*	RING,PISTON	ﾘﾝｸﾞ	1	
5	29560-82012		CAP	ｷｬｯﾌﾟ	1	
6	25808-42481	*	SEAL,DUST	ｼｰﾙ	1	
7	24230-82211	*	PACKING	ﾊﾟｯｷﾝｸﾞ	1	
8	24230-82221	*	RING,BACK-UP	ﾘﾝｸﾞ	1	
9	24230-82291	*	O-RING	Oﾘﾝｸﾞ	1	
10	24230-82231	*	RING,BACK-UP	ﾘﾝｸﾞ	1	
11	25908-44101		PLUG	ﾌﾟﾗｸﾞ	1	
12	25908-44111		PLUG,NYLON	ﾌﾟﾗｸﾞ	1	
13	23870-52871		PLUG	ﾌﾟﾗｸﾞ	1	
14	211F0-82551		PISTON	ﾋﾟｽﾄﾝ	1	
15	24389-46021		SPRING	ｽﾌﾟﾘﾝｸﾞ	1	
16	215T0-83001		HEAD,PISTON	ﾍｯﾄﾞ	1	
-	27390-82011		HEAD,PISTON	ﾍｯﾄﾞ	1	[FC][FCS35][FCS55][FCS45]
17	216G8-42031		SHEAVE	ｼｰﾌﾞ	2	
-	90789-40100		SHEAVE	ｼｰﾌﾞ	2	[FC][FCS35][FCS55][FCS45]

FIG.193 LIFT CYLINDER(FRONT) [VFHM18G]

(M5010810) リフトシリンダ(フロント)

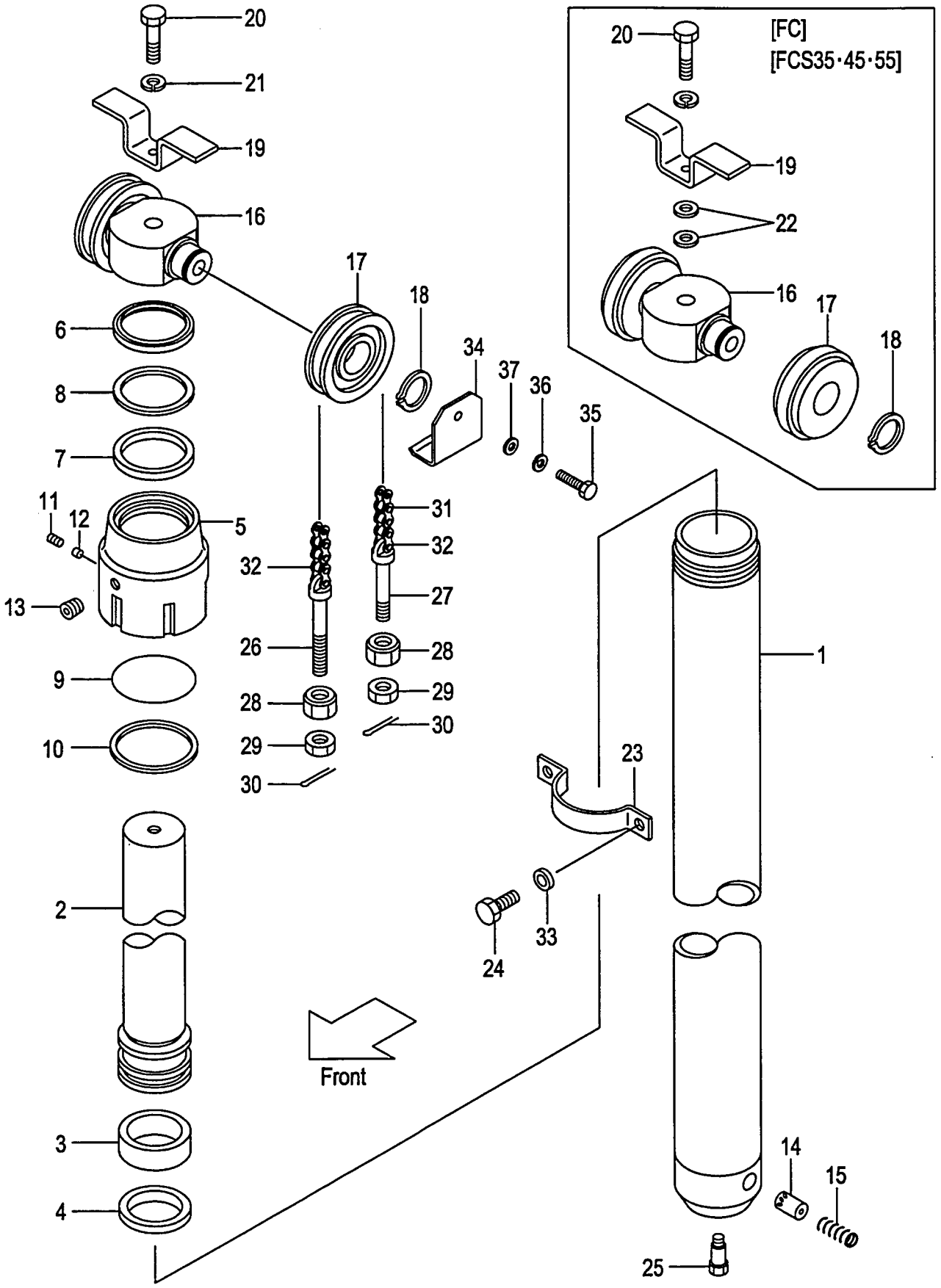

A:VFHM18G(1T)
B:VFHM18G(1.5T)
C:VFHM18G(1.8T)

FIG.193
(M5010810)

Item No	Part No.	Mark	Description		Req'd	Remarks : Serial No.
18	02100-00035		RING,SNAP	ｽﾅｯﾌﾟﾘﾝｸﾞ	2	
-	02100-00040		RING,SNAP	ｽﾅｯﾌﾟﾘﾝｸﾞ	2	[FC][FCS35][FCS55][FCS45]
19	215T0-83021		STOPPER	ｽﾄｯﾊﾟ	1	
-	27970-82211		STOPPER	ｽﾄｯﾊﾟ	1	[FC][FCS35][FCS55][FCS45]
20	01100-16060		BOLT	ﾎﾞﾙﾄ	1	
-	01100-16065		BOLT	ﾎﾞﾙﾄ	1	[FC][FCS35][FCS55][FCS45]
21	02010-00016		WASHER	ﾜｯｼｬ	1	
22	02000-00016		WASHER	ﾜｯｼｬ	2	[FC][FCS35][FCS55][FCS45]
23	27390-82101		SUPPORT	ｻﾎﾟｰﾄ	1	
24	01103-10020		BOLT	ﾎﾞﾙﾄ	2	
25	214A0-82831		BOLT	ﾎﾞﾙﾄ	1	
26	218G8-42501		PIN,ANCHOR	ﾋﾟﾝ	2	
-	510F5-54051		PIN,ANCHOR	ﾋﾟﾝ	2	[FC][FCS35][FCS55][FCS45]
27	218G8-42521		PIN,ANCHOR	ﾋﾟﾝ	2	
-	510F5-54061		PIN,ANCHOR	ﾋﾟﾝ	2	[FC][FCS35][FCS55][FCS45]
28	22118-40181		NUT	ﾅｯﾄ	4	
29	01400-00014		NUT	ﾅｯﾄ	4	
30	02200-03030		PIN	ﾋﾟﾝ	4	
31	218G8-45771		CHAIN VFHM360	ﾁｪｰﾝ	2	
-	218G8-45851		CHAIN VFHM400	ﾁｪｰﾝ	2	
-	218G8-45931		CHAIN VFHM435	ﾁｪｰﾝ	2	
-	218G8-46031		CHAIN VFHM480	ﾁｪｰﾝ	2	
-	218G8-46091		CHAIN VFHM500	ﾁｪｰﾝ	2	
-	218G8-46171		CHAIN VFHM540	ﾁｪｰﾝ	2	
-	218G8-46191		CHAIN VFHM550	ﾁｪｰﾝ	2	
-	218G8-46311		CHAIN VFHM600	ﾁｪｰﾝ	2	
-	218G8-46451		CHAIN VFHM650	ﾁｪｰﾝ	2	
-	218G8-46591		CHAIN VFHM700	ﾁｪｰﾝ	2	
-	218G8-46691		CHAIN VFHM750	ﾁｪｰﾝ	2	
-	09001-08051		CHAIN VFHM360	ﾁｪｰﾝ	2	[FC][FCS35][FCS55][FCS45]
-	09001-08057		CHAIN VFHM400	ﾁｪｰﾝ	2	[FC][FCS35][FCS55][FCS45]
-	09001-08061		CHAIN VFHM435	ﾁｪｰﾝ	2	[FC][FCS35][FCS55][FCS45]
-	09001-08067		CHAIN VFHM480	ﾁｪｰﾝ	2	[FC][FCS35][FCS55][FCS45]
-	09001-08071		CHAIN VFHM500	ﾁｪｰﾝ	2	[FC][FCS35][FCS55][FCS45]
-	09001-08077		CHAIN VFHM540	ﾁｪｰﾝ	2	[FC][FCS35][FCS55][FCS45]
-	09001-08079		CHAIN VFHM550	ﾁｪｰﾝ	2	[FC][FCS35][FCS55][FCS45]
-	09001-08085		CHAIN VFHM600	ﾁｪｰﾝ	2	[FC][FCS35][FCS55][FCS45]
-	09001-08093		CHAIN VFHM650	ﾁｪｰﾝ	2	[FC][FCS35][FCS55][FCS45]
-	09001-08103		CHAIN VFHM700	ﾁｪｰﾝ	2	[FC][FCS35][FCS55][FCS45]
-	09001-08109		CHAIN VFHM750	ﾁｪｰﾝ	2	[FC][FCS35][FCS55][FCS45]
32	218G8-42701		LINK	ﾘﾝｸ	2	
33	02011-00010		WASHER	ﾜｯｼｬ	2	
34	57393-02041		COVER	ｶﾊﾞｰ	2	[EXD][EXE][EXN]
35	01100-16016		BOLT	ﾎﾞﾙﾄ	2	[EXD][EXE][EXN]
36	02010-00016		WASHER	ﾜｯｼｬ	2	[EXD][EXE][EXN]
37	02000-00016		WASHER	ﾜｯｼｬ	2	[EXD][EXE][EXN]
K1	27390-59801		KIT,OVERHAUL	ｵｰﾊﾞｰﾎｰﾙｷｯﾄ	1	INC.3,4,6-10

FIG.194 LIFT CYLINDER (REAR) [VFHM18G]

(M5010820) リフトシリンダ(リヤー)

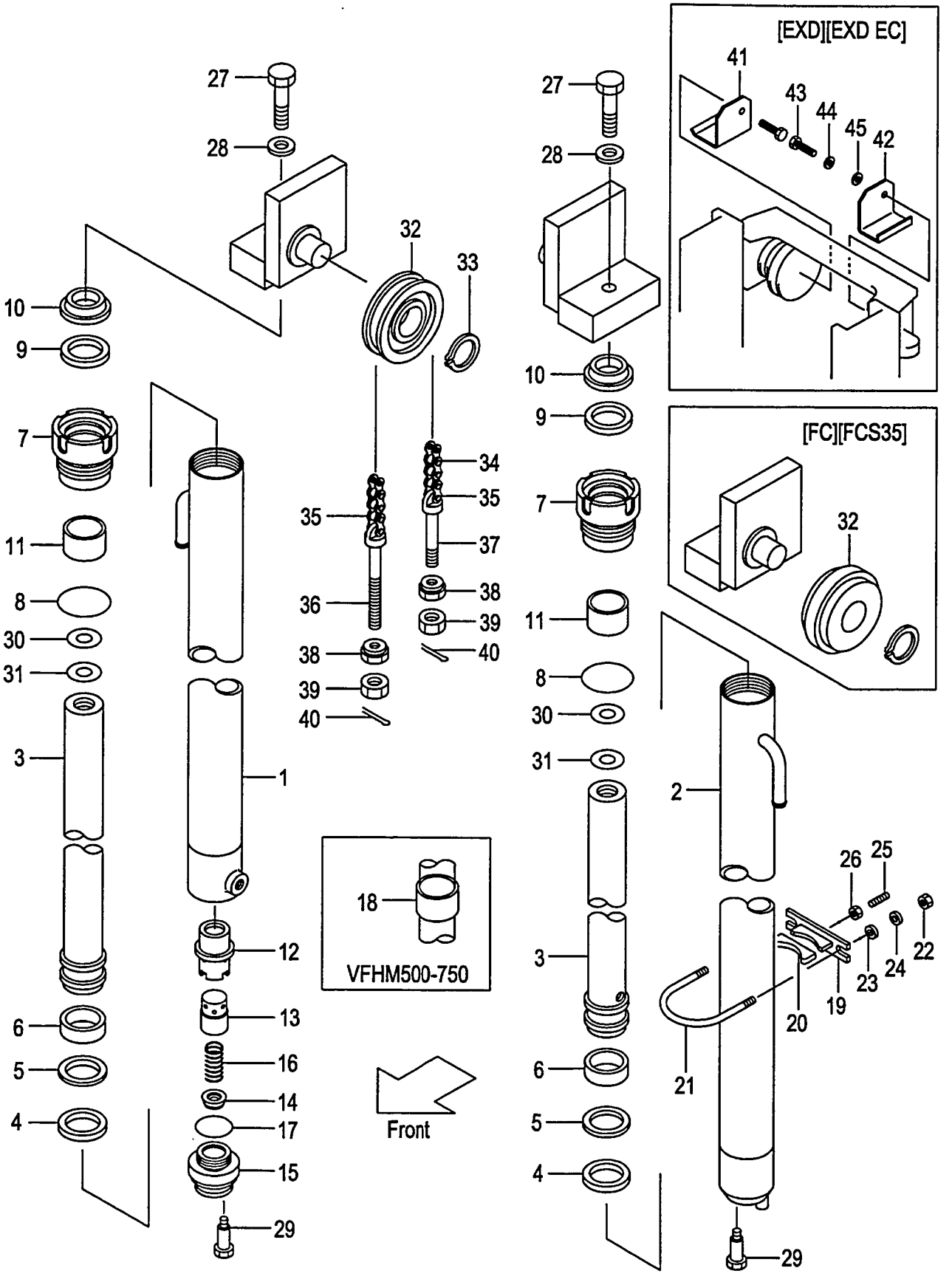

A:VFHM18G(1T)
B:VFHM18G(1.5T)
C:VFHM18G(1.8T)

FIG.194
(M5010820)

Item No	Part No.	Mark	Description	Req'd	Remarks : Serial No.
A1	216G0-80113		CYL-ASSY,RH VFHM360 ｼﾘﾝﾀﾞｱｯｾﾝ	1	INC.1,3-18
-	216G0-80123		CYL-ASSY,RH VFHM400 ｼﾘﾝﾀﾞｱｯｾﾝ	1	INC.1,3-18
-	216G0-80103		CYL-ASSY,RH VFHM435 ｼﾘﾝﾀﾞｱｯｾﾝ	1	INC.1,3-18
-	216G0-80133		CYL-ASSY,RH VFHM480 ｼﾘﾝﾀﾞｱｯｾﾝ	1	INC.1,3-18
-	216G0-80144		CYL-ASSY,RH VFHM500 ｼﾘﾝﾀﾞｱｯｾﾝ	1	INC.1,3-18
-	216G0-80154		CYL-ASSY,RH VFHM540 ｼﾘﾝﾀﾞｱｯｾﾝ	1	INC.1,3-18
-	216G0-80164		CYL-ASSY,RH VFHM550 ｼﾘﾝﾀﾞｱｯｾﾝ	1	INC.1,3-18
-	216G0-80174		CYL-ASSY,RH VFHM600 ｼﾘﾝﾀﾞｱｯｾﾝ	1	INC.1,3-18
-	216G0-80184		CYL-ASSY,RH VFHM650 ｼﾘﾝﾀﾞｱｯｾﾝ	1	INC.1,3-18
-	216G0-80194		CYL-ASSY,RH VFHM700 ｼﾘﾝﾀﾞｱｯｾﾝ	1	INC.1,3-18
-	216G0-80204		CYL-ASSY,RH VFHM750 ｼﾘﾝﾀﾞｱｯｾﾝ	1	INC.1,3-18
A2	216G0-80313		CYL-ASSY,LH VFHM360 ｼﾘﾝﾀﾞｱｯｾﾝ	1	INC.2-11,18
-	216G0-80323		CYL-ASSY,LH VFHM400 ｼﾘﾝﾀﾞｱｯｾﾝ	1	INC.2-11,18
-	216G0-80303		CYL-ASSY,LH VFHM435 ｼﾘﾝﾀﾞｱｯｾﾝ	1	INC.2-11,18
-	216G0-80333		CYL-ASSY,LH VFHM480 ｼﾘﾝﾀﾞｱｯｾﾝ	1	INC.2-11,18
-	216G0-80344		CYL-ASSY,LH VFHM500 ｼﾘﾝﾀﾞｱｯｾﾝ	1	INC.2-11,18
-	216G0-80354		CYL-ASSY,LH VFHM540 ｼﾘﾝﾀﾞｱｯｾﾝ	1	INC.2-11,18
-	216G0-80364		CYL-ASSY,LH VFHM550 ｼﾘﾝﾀﾞｱｯｾﾝ	1	INC.2-11,18
-	216G0-80374		CYL-ASSY,LH VFHM600 ｼﾘﾝﾀﾞｱｯｾﾝ	1	INC.2-11,18
-	216G0-80384		CYL-ASSY,LH VFHM650 ｼﾘﾝﾀﾞｱｯｾﾝ	1	INC.2-11,18
-	216G0-80394		CYL-ASSY,LH VFHM700 ｼﾘﾝﾀﾞｱｯｾﾝ	1	INC.2-11,18
-	216G0-80404		CYL-ASSY,LH VFHM750 ｼﾘﾝﾀﾞｱｯｾﾝ	1	INC.2-11,18
1	216G0-80512		TUBE RH VFHM360 ﾁｭｰﾌﾞ	1	
-	216G0-80522		TUBE RH VFHM400 ﾁｭｰﾌﾞ	1	
-	216G0-80502		TUBE RH VFHM435 ﾁｭｰﾌﾞ	1	
-	216G0-80532		TUBE RH VFHM480 ﾁｭｰﾌﾞ	1	
-	216G0-80542		TUBE RH VFHM500 ﾁｭｰﾌﾞ	1	
-	216G0-80552		TUBE RH VFHM540 ﾁｭｰﾌﾞ	1	
-	216G0-80562		TUBE RH VFHM550 ﾁｭｰﾌﾞ	1	
-	216G0-80572		TUBE RH VFHM600 ﾁｭｰﾌﾞ	1	
-	216G0-80582		TUBE RH VFHM650 ﾁｭｰﾌﾞ	1	
-	216G0-80592		TUBE RH VFHM700 ﾁｭｰﾌﾞ	1	
-	216G0-80602		TUBE RH VFHM750 ﾁｭｰﾌﾞ	1	
2	216G0-80712		TUBE LH VFHM360 ﾁｭｰﾌﾞ	1	
-	216G0-80722		TUBE LH VFHM400 ﾁｭｰﾌﾞ	1	
-	216G0-80702		TUBE LH VFHM435 ﾁｭｰﾌﾞ	1	
-	216G0-80732		TUBE LH VFHM480 ﾁｭｰﾌﾞ	1	
-	216G0-80742		TUBE LH VFHM500 ﾁｭｰﾌﾞ	1	
-	216G0-80752		TUBE LH VFHM540 ﾁｭｰﾌﾞ	1	
-	216G0-80762		TUBE LH VFHM550 ﾁｭｰﾌﾞ	1	
-	216G0-80772		TUBE LH VFHM600 ﾁｭｰﾌﾞ	1	
-	216G0-80782		TUBE LH VFHM650 ﾁｭｰﾌﾞ	1	
-	216G0-80792		TUBE LH VFHM700 ﾁｭｰﾌﾞ	1	
-	216G0-80802		TUBE LH VFHM750 ﾁｭｰﾌﾞ	1	
3	216G0-81311		ROD,PISTON VFHM360 ﾛｯﾄﾞ	2	
-	216G0-81321		ROD,PISTON VFHM400 ﾛｯﾄﾞ	2	
-	216G0-81301		ROD,PISTON VFHM435 ﾛｯﾄﾞ	2	
-	216G0-81331		ROD,PISTON VFHM480 ﾛｯﾄﾞ	2	
-	216G0-81341		ROD,PISTON VFHM500 ﾛｯﾄﾞ	2	
-	216G0-81351		ROD,PISTON VFHM540 ﾛｯﾄﾞ	2	

FIG.194 LIFT CYLINDER (REAR) [VFHM18G]

(M5010820) リフトシリンダ(リヤー)

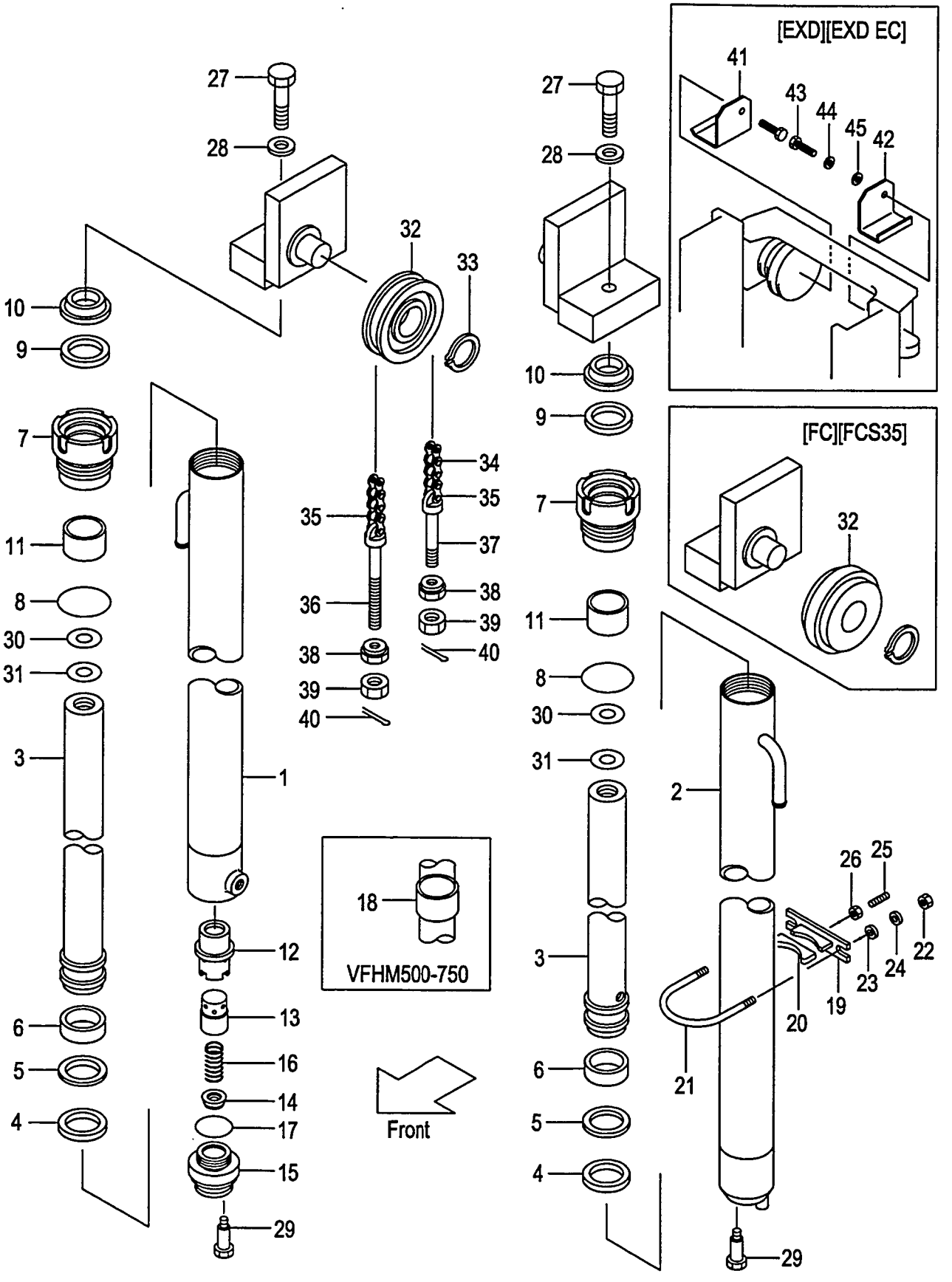

A:VFHM18G(1T)
B:VFHM18G(1.5T)
C:VFHM18G(1.8T)

FIG.194
(M5010820)

Item No	Part No.	Mark	Description		Req'd	Remarks : Serial No.
-	216G0-81361		ROD,PISTON VFHM550	ﾛｯﾄﾞ	2	
-	216G0-80173		ROD,PISTON VFHM600	ﾛｯﾄﾞ	2	
-	216G0-81381		ROD,PISTON VFHM650	ﾛｯﾄﾞ	2	
-	216G0-81391		ROD,PISTON VFHM700	ﾛｯﾄﾞ	2	
-	216G0-81401		ROD,PISTON VFHM750	ﾛｯﾄﾞ	2	
4	22580-53311	*	PACKING	ﾊﾟｯｷﾝｸﾞ	2	
5	23650-52861	*	RING,BACK-UP	ﾘﾝｸﾞ	2	
6	22580-53321	*	WEARING	ｳｪｱﾘﾝｸﾞ	2	
7	216G8-42601		CAP,CYL	ｷｬｯﾌﾟ	2	
8	216G8-42631	*	O-RING	Oﾘﾝｸﾞ	2	
9	216G8-42641	*	PACKING	ﾊﾟｯｷﾝｸﾞ	2	
10	216G8-42651	*	SEAL,DUST	ｼｰﾙ	2	
11	216G8-42621		BUSHING	ﾌﾞｯｼﾝｸﾞ	2	
12	53658-43021		SLEEVE	ｽﾘｰﾌﾞ	1	(RH)
13	53658-43011		PISTON	ﾋﾟｽﾄﾝ	1	(RH)
14	53658-43001		VALVE,CHECK	ﾊﾞﾙﾌﾞ	1	(RH)
15	53658-43041		PLUG	ﾌﾟﾗｸﾞ	1	(RH)
16	53658-43031		SPRING	ｽﾌﾟﾘﾝｸﾞ	1	(RH)
17	03320-00340		O-RING	Oﾘﾝｸﾞ	1	(RH)
18	216G8-42661		SPACER VFHM500	ｽﾍﾟｰｻ	2	
-	278P0-82141		SPACER VFHM540	ｽﾍﾟｰｻ	2	
-	216G8-42661		SPACER VFHM550	ｽﾍﾟｰｻ	2	
-	278P0-82151		SPACER VFHM600	ｽﾍﾟｰｻ	2	
-	278P0-82121		SPACER VFHM650	ｽﾍﾟｰｻ	2	
-	278P0-82131		SPACER VFHM700	ｽﾍﾟｰｻ	2	
-	278P0-82131		SPACER VFHM750	ｽﾍﾟｰｻ	2	
A3	215E8-42171		SUPPORT-ASSY	ｻﾎﾟｰﾄｱｯｾﾝ	2	INC.19,20
19	215E8-42181		SUPPORT	ｻﾎﾟｰﾄ	2	
20	24868-42111		RUBBER	ﾗﾊﾞｰ	2	
21	216G8-43161		U-BOLT	Uﾎﾞﾙﾄ	2	
22	234A8-42561		NUT	ﾅｯﾄ	4	
23	02000-20010		WASHER	ﾜｯｼｬ	4	
24	02010-20010		WASHER	ﾜｯｼｬ	4	
25	215E8-42231		BOLT	ﾎﾞﾙﾄ	2	
26	234A8-42571		NUT	ﾅｯﾄ	2	
27	01103-14040		BOLT	ﾎﾞﾙﾄ	2	
28	02011-00014		WASHER	ﾜｯｼｬ	2	
29	214A8-42661		BOLT	ﾎﾞﾙﾄ	2	
30	22517-40051		SHIM	ｼﾑ	2	
31	22717-40081		SHIM	ｼﾑ	2	
32	234A8-43501		SHEAVE	ｼｰﾌﾞ	2	
-	90789-40100		SHEAVE	ｼｰﾌﾞ	2	[FC][FCS35][FCS55][FCS45]
33	02100-00040		RING,SNAP	ｽﾅｯﾌﾟﾘﾝｸﾞ	2	
34	218G8-45931		CHAIN VFHM360	ﾁｪｰﾝ	2	
-	218G8-46011		CHAIN VFHM400	ﾁｪｰﾝ	2	
-	218G8-46091		CHAIN VFHM435	ﾁｪｰﾝ	2	
-	218G8-46191		CHAIN VFHM480	ﾁｪｰﾝ	2	
-	218G8-46251		CHAIN VFHM500	ﾁｪｰﾝ	2	
-	218G8-46331		CHAIN VFHM540	ﾁｪｰﾝ	2	
-	218G8-46351		CHAIN VFHM550	ﾁｪｰﾝ	2	

FIG.194 LIFT CYLINDER (REAR) [VFHM18G]

(M5010820) リフトシリンダ(リヤー)

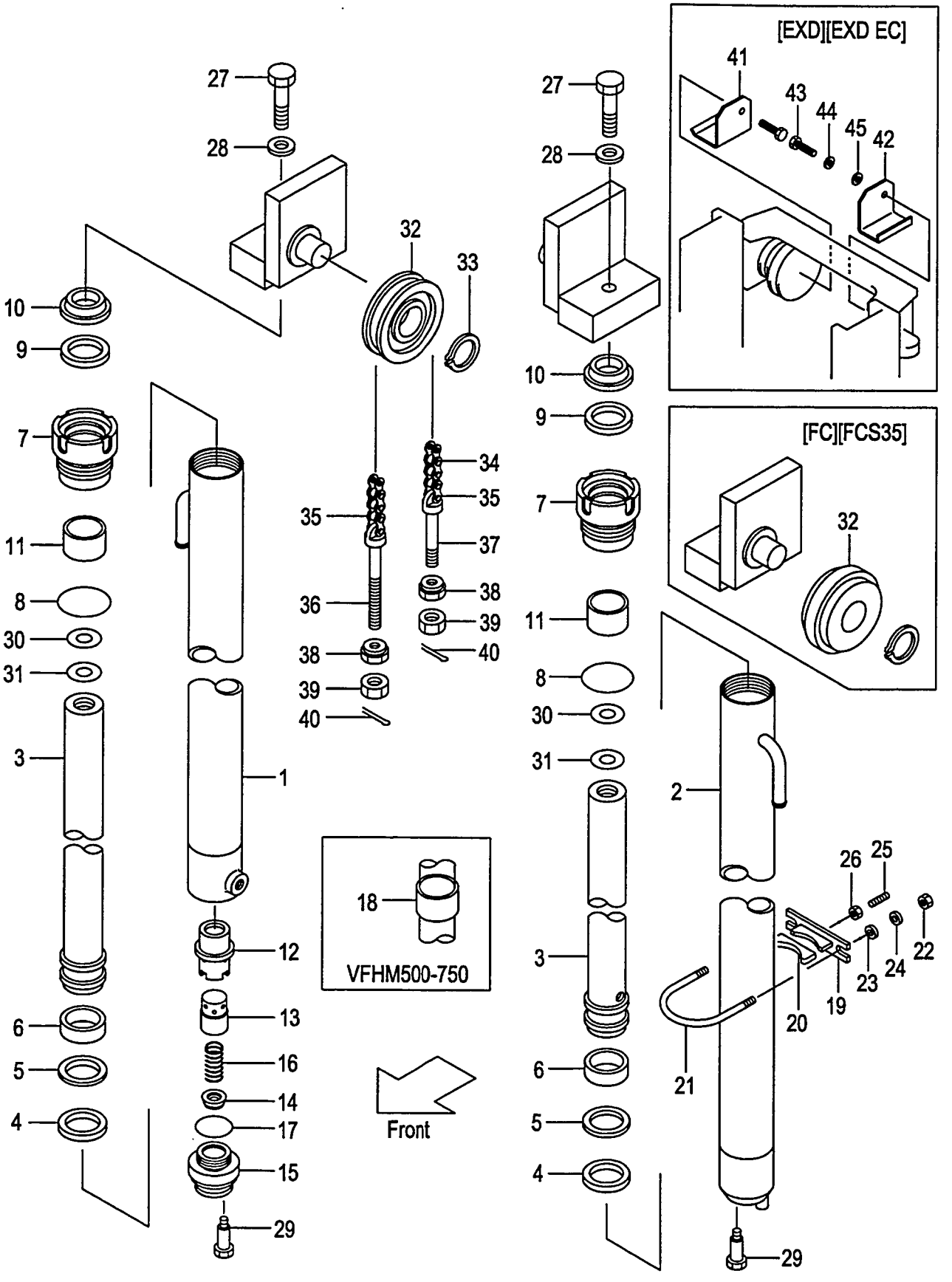

A:VFHM18G(1T)
B:VFHM18G(1.5T)
C:VFHM18G(1.8T)

FIG.194
(M5010820)

Item No	Part No.	Mark	Description		Req'd	Remarks : Serial No.
-	218G8-46471		CHAIN VFHM600	ﾁｪｰﾝ	2	
-	218G8-46611		CHAIN VFHM650	ﾁｪｰﾝ	2	
-	218G8-46751		CHAIN VFHM700	ﾁｪｰﾝ	2	
-	218G8-46851		CHAIN VFHM750	ﾁｪｰﾝ	2	
-	09001-08059		CHAIN VFHM360	ﾁｪｰﾝ	2	[FC][FCS35][FCS55][FCS45]
-	09001-08065		CHAIN VFHM400	ﾁｪｰﾝ	2	[FC][FCS35][FCS55][FCS45]
-	09001-08069		CHAIN VFHM435	ﾁｪｰﾝ	2	[FC][FCS35][FCS55][FCS45]
-	09001-08075		CHAIN VFHM480	ﾁｪｰﾝ	2	[FC][FCS35][FCS55][FCS45]
-	09001-08079		CHAIN VFHM500	ﾁｪｰﾝ	2	[FC][FCS35][FCS55][FCS45]
-	09001-08083		CHAIN VFHM540	ﾁｪｰﾝ	2	[FC][FCS35][FCS55][FCS45]
-	09001-08085		CHAIN VFHM550	ﾁｪｰﾝ	2	[FC][FCS35][FCS55][FCS45]
-	09001-08093		CHAIN VFHM600	ﾁｪｰﾝ	2	[FC][FCS35][FCS55][FCS45]
-	09001-08101		CHAIN VFHM650	ﾁｪｰﾝ	2	[FC][FCS35][FCS55][FCS45]
-	09001-08109		CHAIN VFHM700	ﾁｪｰﾝ	2	[FC][FCS35][FCS55][FCS45]
-	09001-08117		CHAIN VFHM750	ﾁｪｰﾝ	2	[FC][FCS35][FCS55][FCS45]
35	218G8-42701		LINK	ﾘﾝｸ	2	
36	218G8-42501		PIN,ANCHOR	ﾋﾟﾝ	2	
-	510F5-54051		PIN,ANCHOR	ﾋﾟﾝ	2	[FC][FCS35][FCS55][FCS45]
37	218G8-42511		PIN,ANCHOR	ﾋﾟﾝ	2	
-	510F5-54061		PIN,ANCHOR	ﾋﾟﾝ	2	[FC][FCS35][FCS55][FCS45]
38	22118-40181		NUT	ﾅｯﾄ	4	
39	01400-00014		NUT	ﾅｯﾄ	4	
40	02200-03030		PIN	ﾋﾟﾝ	4	
41	514A3-04221		COVER	ｶﾊﾞｰ	1	[EXD][EXE][EXN]
42	514A3-04201		COVER	ｶﾊﾞｰ	1	[EXD][EXE][EXN]
43	01100-16016		BOLT	ﾎﾞﾙﾄ	1	[EXD][EXE][EXN]
44	02010-00016		WASHER	ﾜｯｼｬ	1	[EXD][EXE][EXN]
45	02000-00016		WASHER	ﾜｯｼｬ	1	[EXD][EXE][EXN]
K1	216G0-89821		KIT,OVERHAUL	ｵｰﾊﾞﾎｰﾙｷｯﾄ	2	INC.4-6,8-10

FIG.195 MAST PIPING [VFHM18G]

(M5010830) マストパイピング

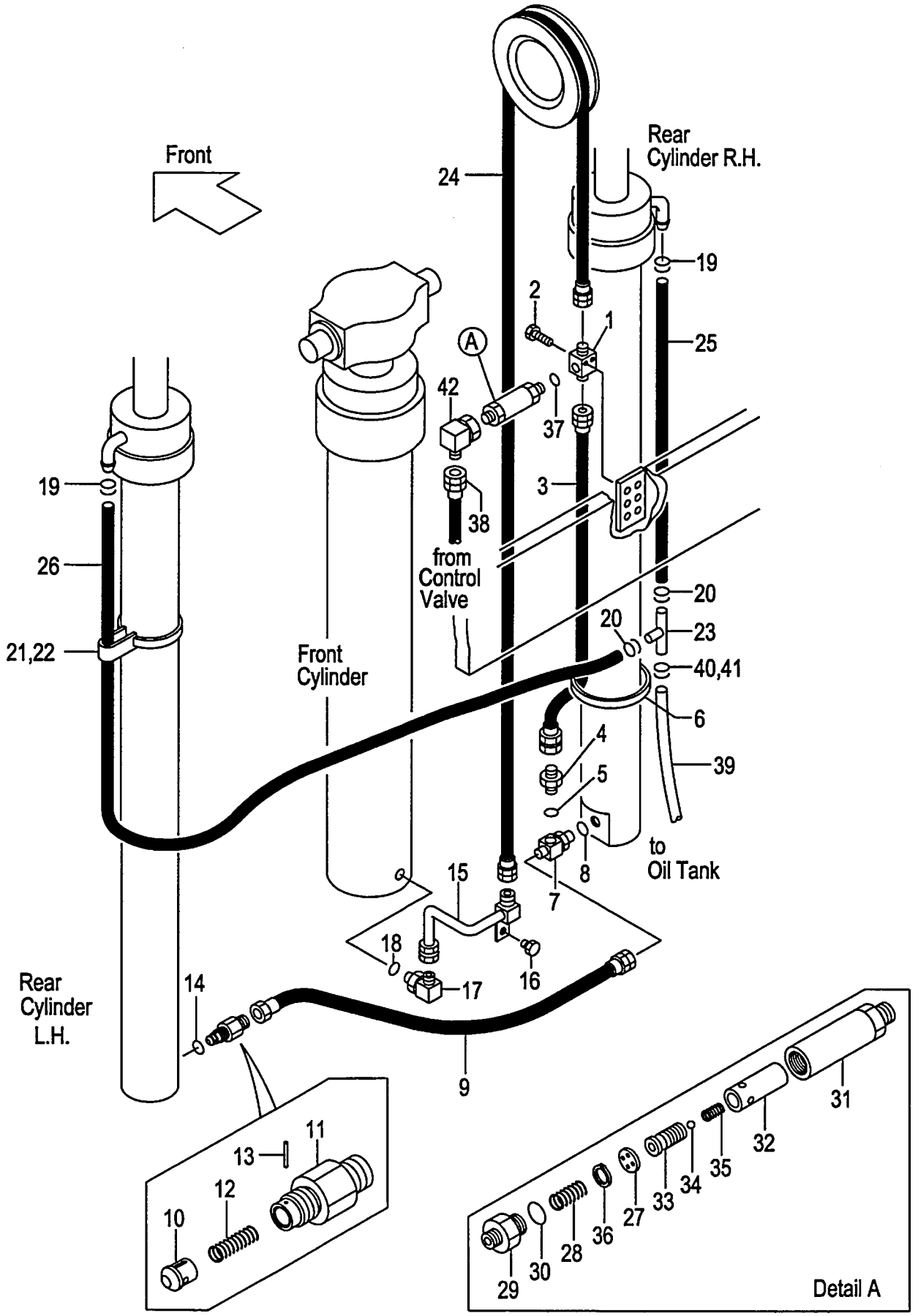

A:VFHM18G(1T)
B:VFHM18G(1.5T)
C:VFHM18G(1.8T)

FIG.195
(M5010830)

Item No	Part No.	Mark	Description		Req'd	Remarks : Serial No.
1	229F0-94101		THREE-WAY	ｽﾘｰｳｪｲ	1	
2	01184-10040		BOLT & WASHER	ﾎﾞﾙﾄ & ﾜｯｼｬ	2	
3	216G0-93151		HOSE	ﾎｰｽ	1	
A1	04134-20404		NIPPLE-ASSY	ﾆｯﾌﾟﾙｱｯｾﾝ	1	INC.4,5
4	04134-00404		NIPPLE	ﾆｯﾌﾟﾙ	1	
5	03320-00180		O-RING	Oﾘﾝｸﾞ	1	
6	25790-94021		BAND	ﾊﾞﾝﾄﾞ	1	
A2	216G0-93101		THREE-WAY-ASSY	ｽﾘｰｳｪｲｱｯｾﾝ	1	INC.7,8
7	NO PART NO.	#	THREE-WAY	ｽﾘｰｳｪｲ	1	
8	03320-00140	*	O-RING	Oﾘﾝｸﾞ	1	
9	234A8-02201		HOSE	ﾎｰｽ	1	
A3	216G0-93201		VALVE-ASSY,CUT	ｶｯﾄﾊﾞﾙﾌﾞｱｯｾﾝ	1	INC.10-14
10	NO PART NO.	#	PISTON	ﾋﾟｽﾄﾝ	1	
11	NO PART NO.	#	NIPPLE	ﾆｯﾌﾟﾙ	1	
12	234A8-42611		SPRING	ｽﾌﾟﾘﾝｸﾞ	1	
13	02270-01014		PIN	ﾋﾟﾝ	1	
14	03320-00140	*	O-RING	Oﾘﾝｸﾞ	1	
15	211F0-93001		PIPE	ﾊﾟｲﾌﾟ	1	
16	01185-08016		BOLT & WASHER	ﾎﾞﾙﾄ & ﾜｯｼｬ	1	
A4	229F0-91001		ELBOW-ASSY	ｴﾙﾎﾞｱｯｾﾝ	1	INC.17,18
17	NO PART NO.	#	ELBOW	ｴﾙﾎﾞ	1	
18	03320-00240		O-RING	Oﾘﾝｸﾞ	1	
19	04911-00018		CLIP	ｸﾘｯﾌﾟ	2	
20	04911-00018		CLIP	ｸﾘｯﾌﾟ	2	
21	04913-21380		BAND	ﾊﾞﾝﾄﾞ	2	
22	23678-42401		BAND,HOSE	ﾊﾞﾝﾄﾞ	2	
23	23679-45051		THREE-WAY	ｽﾘｰｳｪｲ	1	
24	04601-44230		HOSE VFHM360	ﾎｰｽ	1	
-	04601-44255		HOSE VFHM400	ﾎｰｽ	1	
-	04601-44280		HOSE VFHM435	ﾎｰｽ	1	
-	04601-44309		HOSE VFHM480	ﾎｰｽ	1	
-	04601-44329		HOSE VFHM500	ﾎｰｽ	1	
-	04601-44353		HOSE VFHM540	ﾎｰｽ	1	
-	04601-44361		HOSE VFHM550	ﾎｰｽ	1	
-	04601-44397		HOSE VFHM600	ﾎｰｽ	1	
-	04601-44440		HOSE VFHM650	ﾎｰｽ	1	
-	04601-44483		HOSE VFHM700	ﾎｰｽ	1	
-	04601-44516		HOSE VFHM750	ﾎｰｽ	1	
25	23678-40100		HOSE VFHM360	ﾎｰｽ	1	
-	23678-40115		HOSE VFHM400	ﾎｰｽ	1	
-	23678-40125		HOSE VFHM435	ﾎｰｽ	1	
-	23678-40140		HOSE VFHM480	ﾎｰｽ	1	
-	23678-40150		HOSE VFHM500	ﾎｰｽ	1	
-	23678-40165		HOSE VFHM540	ﾎｰｽ	1	
-	23678-40170		HOSE VFHM550	ﾎｰｽ	1	
-	23678-40185		HOSE VFHM600	ﾎｰｽ	1	
-	23678-40210		HOSE VFHM650	ﾎｰｽ	1	
-	23678-40230		HOSE VFHM700	ﾎｰｽ	1	
-	23678-40245		HOSE VFHM750	ﾎｰｽ	1	
26	23678-40150		HOSE VFHM360	ﾎｰｽ	1	

FIG.195 MAST PIPING [VFHM18G]

(M5010830) マストパイピング

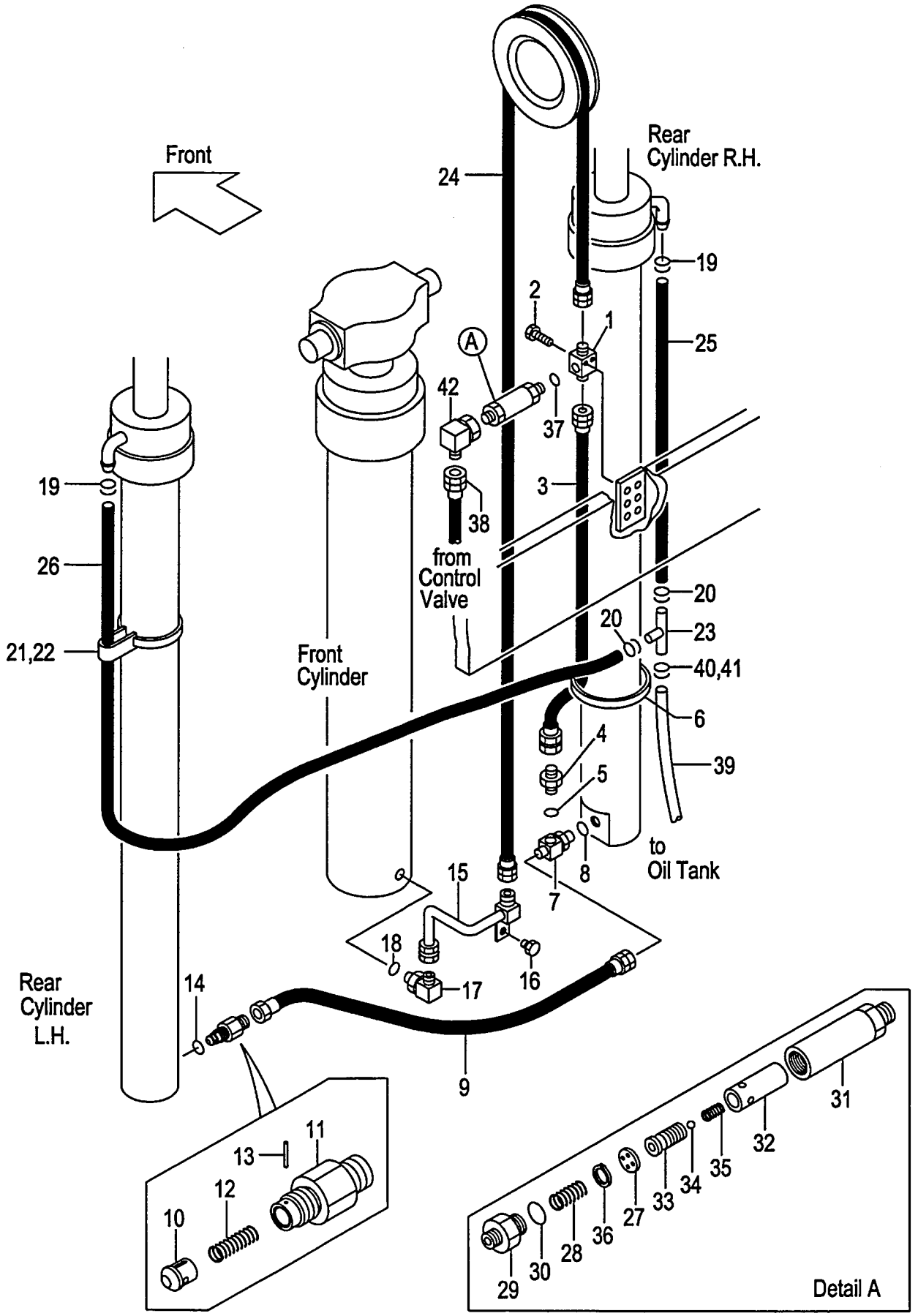

A:VFHM18G(1T)
B:VFHM18G(1.5T)
C:VFHM18G(1.8T)

FIG.195
(M5010830)

Item No	Part No.	Mark	Description		Req'd	Remarks : Serial No.
-	23678-40165		HOSE VFHM400	ホース	1	
-	23678-40175		HOSE VFHM435	ホース	1	
-	23678-40190		HOSE VFHM480	ホース	1	
-	23678-40200		HOSE VFHM500	ホース	1	
-	23678-40215		HOSE VFHM540	ホース	1	
-	23678-40220		HOSE VFHM550	ホース	1	
-	23678-40235		HOSE VFHM600	ホース	1	
-	23678-40260		HOSE VFHM650	ホース	1	
-	23678-40280		HOSE VFHM700	ホース	1	
-	23678-40295		HOSE VFHM750	ホース	1	
A5	216G8-41001		REGULATOR-ASSY	レギュレータアッセン	1	INC.27-36
27	NO PART NO.	#	PLATE	プレート	1	
28	27979-43101		SPRING	スプリング	1	
29	NO PART NO.	#	NIPPLE	ニップル	1	
30	03300-00280		O-RING	Oリング	1	
31	NO PART NO.	#	CASE	ケース	1	
32	NO PART NO.	#	SLEEVE	スリーブ	1	
33	NO PART NO.	#	PISTON	ピストン	1	
34	24459-42951		BALL,NYLON	ボール	1	
35	214A8-44151		SPRING	スプリング	1	
36	02110-00018		RING,SNAP	スナップリング	1	
37	03320-00180		O-RING	Oリング	1	
38	277P0-92131		HOSE	ホース	1	
-	04691-04066		HOSE	ホース	1	[FC][FCS35][FCS55][FCS45]
39	23678-40095		HOSE	ホース	1	
-	04710-04110		HOSE	ホース	1	[FC][FCS35][FCS55][FCS45] [RTL]
40	04911-00018		CLIP	クリップ	1	
-	04911-00021		CLIP	クリップ	1	[FC][FCS35][FCS55][FCS45] [RTL]
41	04914-00016		CLIP	クリップ	1	
-	04911-00021		CLIP	クリップ	1	[FC][FCS35][FCS55][FCS45] [RTL]
42	62150-14321		ELBOW	エルボ	1	

PARTS NUMBER INDEX

Part No.	Fig.No.	Part No.	Fig.No.	Part No.	Fig.No.	Part No.	Fig.No.
B-B3613-13001	58	B-21001-90408	141	B-21013-36433	139	B-23641-03716	58
B-B3613-13001	59	B-21003-30086	136	B-21013-36433	142	B-23641-03716	58
B-B6127-20412	156	B-21003-30086	137	B-21013-36434	137	B-23641-03716	59
B-B6341-01401	156	B-21003-30086	138	B-21013-36434	138	B-23641-03716	59
B-B6351-01401	156	B-21003-30086	139	B-21013-36434	139	B-23641-04303	58
B-B6527-62102	173	B-21011-30137	136	B-21013-36434	143	B-23641-04303	59
B-B6527-62102	179	B-21011-30137	137	B-21013-36434	143	B-23642-00911	58
B-B6527-62302	173	B-21011-30137	138	B-21013-36434	143	B-23642-00911	59
B-B6527-62302	179	B-21011-30137	139	B-21013-37348	136	B-23643-00296	58
B-B6527-62402	173	B-21011-30507	141	B-21013-37348	137	B-23643-00296	59
B-B6527-62402	179	B-21011-30507	143	B-21013-37348	138	B-23643-00523	58
B-B6527-62502	173	B-21011-30507	143	B-21013-37348	139	B-23643-00523	59
B-B6527-62502	179	B-21011-30507	143	B-21013-37348	140	B-23643-00526	58
B-B6527-62602	173	B-21011-30528	142	B-21013-37356	136	B-23643-00526	59
B-B6527-62602	179	B-21011-30603	141	B-21013-37356	137	B-23643-00618	58
B-B6527-62702	173	B-21011-30603	142	B-21013-37356	138	B-23643-00618	59
B-B6527-62702	179	B-21011-30603	143	B-21013-37356	139	B-23711-01922	58
B-B6527-62802	173	B-21011-30603	143	B-21013-37356	140	B-23711-01922	59
B-B6527-62802	179	B-21011-30603	143	B-21013-39701	137	B-23711-03701	58
B-B6527-63502	173	B-21011-30604	141	B-21013-39701	138	B-23711-03701	59
B-B6527-63502	179	B-21011-30604	142	B-21013-39701	139	B-30111-35008	173
B-B6527-64802	173	B-21011-30604	143	B-21013-39701	143	B-30111-35008	173
B-B6527-64802	179	B-21011-30604	143	B-21013-39701	143	B-30111-35008	179
B-B6527-65002	173	B-21011-30604	143	B-21013-39701	143	B-30111-35008	179
B-B6527-65002	179	B-21011-30618	142	B-21021-30103	137	B-30111-35012	173
B-B6527-65302	173	B-21011-30702	141	B-21021-30104	137	B-30111-35012	173
B-B6527-65302	179	B-21011-30702	142	B-21031-30103	138	B-30111-35012	173
B-B6537-88202	173	B-21011-30702	143	B-21031-30104	138	B-30111-35012	173
B-B6537-88202	179	B-21011-30702	143	B-21041-30103	139	B-30111-35012	173
B-B6537-88502	173	B-21011-30702	143	B-21041-30104	139	B-30111-35012	179
B-B6537-88502	179	B-21011-31011	141	B-21731-30306	140	B-30111-35012	179
B-B6537-88702	173	B-21011-31011	142	B-21731-30308	140	B-30111-35012	179
B-B6537-88702	179	B-21011-31011	143	B-21731-30502	140	B-30111-35012	179
B-B6537-89002	173	B-21011-31011	143	B-21731-30612	140	B-30111-35012	179
B-B6537-89002	179	B-21011-31011	143	B-21731-30613	140	B-30121-45018	173
B-B6537-89202	173	B-21011-31105	136	B-21731-30703	140	B-30121-45018	179
B-B6537-89202	179	B-21011-31106	136	B-21731-30704	140	B-30131-03003	156
B-B6537-89402	173	B-21011-31702	141	B-21731-30802	140	B-30131-35017	173
B-B6537-89402	179	B-21011-31702	142	B-21731-31201	140	B-30131-35017	179
B-B6537-89602	173	B-21011-31702	143	B-21733-40207	140	B-30131-45018	173
B-B6537-89602	179	B-21011-31702	143	B-23451-02016	58	B-30131-45018	179
B-B6537-89902	173	B-21011-31702	143	B-23451-02016	59	B-30141-35012	156
B-B6537-89902	179	B-21011-32404	141	B-23451-02106	58	B-30151-03006	156
B-B665B-00033	156	B-21011-32404	142	B-23451-02106	59	B-30161-45046	173
B-B665B-00034	156	B-21011-32404	143	B-23451-02212	58	B-30161-45046	179
B-C0003-30301	137	B-21011-32404	143	B-23451-02212	59	B-30161-91773	173
B-C0003-30301	138	B-21011-32404	143	B-23641-00313	58	B-30161-91773	179
B-C0003-30301	139	B-21011-32801	141	B-23641-00313	59	B-30191-30025	156
B-21001-00106	140	B-21011-32801	142	B-23641-01609	58	B-30191-35025	173
B-21001-00106	141	B-21011-32801	143	B-23641-01609	59	B-30191-35025	179
B-21001-00106	142	B-21011-32801	143	B-23641-01610	58	B-30311-01403	156
B-21001-00106	143	B-21011-32801	143	B-23641-01610	59	B-30421-30005	156
B-21001-00106	143	B-21013-36432	136	B-23641-02218	58	B-30431-35009	156
B-21001-00106	143	B-21013-36432	137	B-23641-02218	59	B-3045A-00020	173
B-21001-00689	141	B-21013-36432	138	B-23641-02227	58	B-3045A-00020	179
B-21001-00689	142	B-21013-36432	139	B-23641-02227	59	B-3045B-00026	173
B-21001-00689	143	B-21013-36432	141	B-23641-02508	58	B-3045B-00026	179
B-21001-00689	143	B-21013-36433	136	B-23641-02508	59	B-30461-45039	173
B-21001-00689	143	B-21013-36433	137	B-23641-03314	58	B-30461-45039	179
B-21001-01452	140	B-21013-36433	138	B-23641-03314	59	B-3065B-00139	156

PARTS NUMBER INDEX

Part No.	Fig.No.	Part No.	Fig.No.	Part No.	Fig.No.	Part No.	Fig.No.
B-3065B-00211	156	B-93128-10082	138	C-52-11201-01270	55	01100-16016	185
B-30697-49101	173	B-93128-10082	139	C-52-11204-69010	55	01100-16016	193
B-30697-49101	179	B-93364-08052	140	C-52-30780-02340	55	01100-16016	194
B-30697-49201	173	B-94101-08201	140	C-90-0527-0616	55	01100-16060	185
B-30697-49201	179	B-94101-20512	58	C-90-9200-0800	55	01100-16060	191
B-30697-49301	173	B-94101-20512	59	HC26094-17021	60	01100-16060	193
B-30697-49301	179	B-94721-38151	58	HC32G4-10101	60	01100-16065	185
B-30697-49401	173	B-94721-38151	59	HC516G2-42411	60	01100-16065	193
B-30697-49401	179	B-95111-01200	140	R-403-21988	135	01103-08016	42
B-30697-49501	173	B-95112-05500	156	01030-04014	31	01103-08016	63
B-30697-49501	179	B-95113-01800	141	01030-04020	36	01103-08020	43
B-30697-49601	173	B-95113-02400	140	01030-05012	167	01103-08020	45
B-30697-49601	179	B-95121-06000	58	01030-05065	21	01103-08020	48
B-30697-49701	173	B-95121-06000	58	01033-05014	12	01103-08025	51
B-30697-49701	179	B-95121-06000	59	01033-05014	13	01103-08035	50
B-30697-49801	173	B-95121-06000	59	01066-08008	49	01103-08040	47
B-30697-49801	179	B-95121-06500	156	01066-10012	156	01103-08050	50
B-30697-49901	173	B-95133-00500	142	01066-10012	156	01103-08050	51
B-30697-49901	179	B-95151-06300	58	01100-05010	1	01103-08055	50
B-30697-50001	173	B-95151-06300	59	01100-06012	103	01103-10020	185
B-30697-50001	179	B-95713-05500	156	01100-06020	36	01103-10020	193
B-30697-50101	173	B-96111-10613	156	01100-06055	150	01103-10030	42
B-30697-50101	179	B-97123-01111	140	01100-08020	23	01103-10030	46
B-30697-50201	173	B-97123-02111	136	01100-08020	24	01103-10040	50
B-30697-50201	179	B-97123-02111	137	01100-08020	25	01103-10050	46
B-30697-50301	173	B-97123-02111	138	01100-08020	26	01103-10050	170
B-30697-50301	179	B-97123-02111	139	01100-08020	27	01103-10050	176
B-30697-50401	173	BK-7318002001	47	01100-08020	38	01103-10050	182
B-30697-50401	179	BK-7318003001	47	01100-08020	39	01103-10055	50
B-30697-50501	173	BK-7341001000	47	01100-08020	134	01103-10060	108
B-30697-50501	179	BK-7345006000	47	01100-08025	102	01103-10075	46
B-30697-50601	173	BK-8059061000	47	01100-08045	41	01103-10097	1
B-30697-50601	179	BK-8104209010	47	01100-08050	115	01103-10105	46
B-30697-50701	173	BK-81431A4700	47	01100-10030	107	01103-12035	173
B-30697-50701	179	C-K2-11036-83012	55	01100-10030	108	01103-12035	179
B-30697-50801	173	C-K2-11036-83022	55	01100-10035	54	01103-14040	186
B-30697-50801	179	C-51-B2101-02322	55	01100-10050	54	01103-14040	194
B-30697-50901	173	C-52-10901-64550	55	01100-10090	166	01109-12030	122
B-30697-50901	179	C-52-10901-64560	55	01100-12020	100	01110-30090	120
B-30961-03012	156	C-52-10906-04160	55	01100-14025	171	01110-30090	121
B-30961-03512	173	C-52-10910-05150	55	01100-14025	171	01110-30150	120
B-30961-03512	179	C-52-10927-04130	55	01100-14025	177	01110-30150	121
B-91111-60102	141	C-52-11003-02380	55	01100-14025	177	01113-30160	121
B-91111-60102	142	C-52-11003-04010	55	01100-14025	183	01113-30190	121
B-91111-60102	143	C-52-11003-05140	55	01100-14025	190	01113-30230	121
B-91111-60102	143	C-52-11003-64530	55	01100-14030	91	01120-08035	104
B-91111-60102	143	C-52-11005-34500	55	01100-14030	171	01120-08035	105
B-91511-08301	140	C-52-11005-44500	55	01100-14030	177	01120-08035	106
B-91511-08351	140	C-52-11029-52000	55	01100-14030	183	01120-10030	62
B-92703-06181	141	C-52-11031-11001	55	01100-14030	183	01120-10030	64
B-92703-06181	142	C-52-11031-14607	55	01100-14030	190	01123-10045	43
B-92703-06181	143	C-52-11031-21001	55	01100-14030	190	01141-04012	62
B-92703-06181	143	C-52-11036-15160	55	01100-14035	183	01141-04012	63
B-92703-06181	143	C-52-11036-24606	55	01100-14035	190	01141-04012	63
B-93118-08652	136	C-52-11036-25160	55	01100-14040	65	01141-04012	63
B-93118-08652	137	C-52-11036-54070	55	01100-14065	172	01141-04012	64
B-93118-08652	138	C-52-11036-54540	55	01100-14065	178	01170-05045	50
B-93118-08652	139	C-52-11044-13300	55	01100-14065	184	01171-06025	96
B-93128-10082	136	C-52-11044-23300	55	01100-14065	191	01181-08016	124
B-93128-10082	137	C-52-11101-04111	55	01100-14070	116	01181-08016	125

PARTS NUMBER INDEX

Part No.	Fig.No.	Part No.	Fig.No.	Part No.	Fig.No.	Part No.	Fig.No.
01182-08025	9	01185-08016	15	01400-00010	45	01412-10016	64
01183-05012	168	01185-08016	20	01400-00010	89	01412-10016	64
01183-05012	168	01185-08016	28	01400-00010	107	01412-10016	90
01183-06012	145	01185-08016	195	01400-00010	108	01412-10016	90
01183-06012	146	01185-08020	5	01400-00010	109	01412-10016	92
01183-06012	147	01185-08020	46	01400-00012	103	01412-10016	92
01183-06012	148	01185-08020	123	01400-00014	173	01420-00006	15
01183-06016	14	01186-06012	125	01400-00014	173	02000-00004	36
01183-06016	119	01186-06020	8	01400-00014	179	02000-00005	145
01183-06016	187	01186-08016	104	01400-00014	179	02000-00005	146
01183-06016	187	01186-08016	105	01400-00014	185	02000-00005	147
01183-06016	187	01186-08016	106	01400-00014	193	02000-00005	148
01183-06016	187	01186-08020	103	01400-00014	194	02000-00005	167
01183-06025	14	01186-08025	8	01400-10012	54	02000-00006	1
01183-08016	2	01186-08025	35	01400-10012	54	02000-00006	103
01183-08016	8	01186-10020	29	01400-10012	82	02000-00006	103
01183-08016	42	01186-10020	124	01400-10012	84	02000-00006	109
01183-08016	62	01186-10025	29	01400-10012	86	02000-00006	124
01183-08016	64	01186-10030	89	01400-10012	88	02000-00008	1
01183-08016	99	01186-10030	135	01400-20008	9	02000-00008	9
01183-08016	100	01186-12025	96	01402-00008	102	02000-00008	62
01183-08016	101	01186-12025	97	01402-00008	104	02000-00008	63
01183-08016	101	01186-12025	98	01402-00008	105	02000-00008	63
01183-08016	103	01186-12030	122	01402-00008	106	02000-00008	64
01183-08016	108	01186-12035	96	01402-00008	107	02000-00008	107
01183-08016	123	01186-12045	10	01402-00008	107	02000-00008	108
01183-08016	124	01219-12030	1	01402-00010	62	02000-00008	123
01183-08022	10	01400-00004	36	01402-00010	64	02000-00008	124
01183-08025	154	01400-00006	1	01402-00010	107	02000-00008	173
01183-08040	166	01400-00006	14	01402-00010	108	02000-00008	179
01183-10050	189	01400-00006	36	01402-00010	169	02000-00010	6
01184-10016	43	01400-00006	37	01402-00010	175	02000-00010	9
01184-10016	43	01400-00006	39	01402-00010	181	02000-00010	29
01184-10020	109	01400-00006	103	01402-00010	188	02000-00010	89
01184-10020	186	01400-00006	107	01402-00014	56	02000-00010	107
01184-10025	35	01400-00006	108	01402-00014	57	02000-00010	108
01184-10025	52	01400-00006	109	01402-00020	90	02000-00010	109
01184-10025	108	01400-00006	124	01402-00020	92	02000-00010	123
01184-10030	41	01400-00008	1	01402-00022	61	02000-00010	173
01184-10030	45	01400-00008	9	01402-00022	61	02000-00010	179
01184-10030	107	01400-00008	14	01402-00022	90	02000-00012	54
01184-10030	108	01400-00008	23	01402-00022	92	02000-00012	56
01184-10030	109	01400-00008	24	01402-10010	58	02000-00016	103
01184-10035	41	01400-00008	25	01402-10010	59	02000-00016	108
01184-10040	195	01400-00008	26	01402-10012	67	02000-00016	109
01184-10050	45	01400-00008	27	01402-10012	70	02000-00016	185
01184-10055	108	01400-00008	28	01402-10012	73	02000-00016	185
01184-12025	170	01400-00008	31	01402-10012	76	02000-00016	191
01184-12025	176	01400-00008	38	01402-10016	90	02000-00016	193
01184-12025	182	01400-00008	39	01402-10016	92	02000-00016	193
01184-12025	189	01400-00008	41	01407-00022	90	02000-00016	194
01184-12030	58	01400-00008	62	01407-00022	92	02000-00024	42
01184-12030	59	01400-00008	63	01412-00024	62	02000-00024	62
01185-06012	1	01400-00008	64	01412-00024	63	02000-00024	63
01185-06016	12	01400-00008	115	01412-00024	64	02000-00024	64
01185-06016	13	01400-00008	132	01412-10016	61	02000-20010	122
01185-08016	5	01400-00008	133	01412-10016	61	02000-20010	125
01185-08016	5	01400-00008	134	01412-10016	62	02000-20010	166
01185-08016	10	01400-00010	29	01412-10016	62	02000-20010	186
01185-08016	14	01400-00010	43	01412-10016	63	02000-20010	186

PARTS NUMBER INDEX

Part No.	Fig.No.	Part No.	Fig.No.	Part No.	Fig.No.	Part No.	Fig.No.
02000-20010	194	02010-20010	186	02110-00072	44	02432-01008	189
02001-00012	122	02010-20010	194	02110-00080	44	03000-06005	44
02003-20010	46	02010-20012	172	02200-02016	108	03000-06206	49
02010-00004	31	02010-20012	178	02200-02020	107	03000-06206	49
02010-00004	36	02010-20012	184	02200-03030	173	03000-06207	44
02010-00005	1	02010-20012	191	02200-03030	173	03000-06207	48
02010-00005	167	02011-00008	42	02200-03030	179	03000-06207	49
02010-00006	1	02011-00008	43	02200-03030	179	03000-06211	53
02010-00006	15	02011-00008	45	02200-03030	185	03006-06207	44
02010-00006	36	02011-00008	48	02200-03030	193	03010-06904	60
02010-00006	103	02011-00008	50	02200-03030	194	03071-30206	62
02010-00006	124	02011-00008	51	02200-04025	103	03071-30206	63
02010-00006	150	02011-00008	63	02200-04025	108	03071-30206	64
02010-00008	1	02011-00010	46	02200-04025	109	03071-30213	54
02010-00008	9	02011-00010	54	02200-05045	62	03190-00006	186
02010-00008	9	02011-00010	185	02200-05045	63	03190-00008	44
02010-00008	31	02011-00010	193	02200-05045	64	03190-00013	43
02010-00008	41	02011-00012	67	02200-06015	103	03192-00005	44
02010-00008	62	02011-00012	70	02200-16010	103	03192-00012	54
02010-00008	63	02011-00012	73	02200-16010	145	03192-10005	44
02010-00008	64	02011-00012	76	02200-16010	146	03192-10012	54
02010-00008	115	02011-00012	82	02200-16010	147	03211-02501	44
02010-00008	132	02011-00012	84	02200-16010	148	03300-00160	43
02010-00008	133	02011-00012	86	02200-32020	108	03300-00180	43
02010-00008	134	02011-00012	88	02200-32025	107	03300-00280	174
02010-00008	173	02011-00014	186	02200-32025	108	03300-00280	180
02010-00008	179	02011-00014	194	02200-32025	109	03300-00280	187
02010-00010	42	02013-00012	122	02200-32032	61	03300-00280	195
02010-00010	50	02100-00012	51	02200-32032	61	03300-00360	44
02010-00010	108	02100-00020	60	02200-32032	62	03300-10220	44
02010-00012	100	02100-00022	43	02200-32032	62	03310-00300	43
02010-00014	65	02100-00025	42	02200-32032	63	03310-00700	52
02010-00014	91	02100-00025	44	02200-32032	64	03320-00110	91
02010-00014	116	02100-00030	44	02200-32032	64	03320-00110	108
02010-00014	171	02100-00035	44	02200-32032	90	03320-00140	144
02010-00014	171	02100-00035	48	02200-32032	90	03320-00140	150
02010-00014	172	02100-00035	173	02200-32032	92	03320-00140	174
02010-00014	177	02100-00035	173	02200-32032	92	03320-00140	174
02010-00014	177	02100-00035	179	02212-06016	50	03320-00140	180
02010-00014	178	02100-00035	179	02212-08020	54	03320-00140	180
02010-00014	183	02100-00035	182	02212-10020	91	03320-00140	187
02010-00014	183	02100-00035	185	02212-12020	42	03320-00140	187
02010-00014	184	02100-00035	189	02212-12020	46	03320-00140	187
02010-00014	190	02100-00035	193	02242-06055	53	03320-00140	195
02010-00014	190	02100-00038	44	02262-06015	103	03320-00140	195
02010-00014	191	02100-00040	49	02262-06020	109	03320-00180	144
02010-00016	185	02100-00040	185	02262-06025	109	03320-00180	144
02010-00016	185	02100-00040	193	02262-08020	108	03320-00180	150
02010-00016	191	02100-00040	194	02262-08025	107	03320-00180	150
02010-00016	193	02110-00018	174	02262-10030	107	03320-00180	174
02010-00016	193	02110-00018	180	02262-10030	108	03320-00180	180
02010-00016	194	02110-00018	187	02262-10030	109	03320-00180	186
02010-00030	120	02110-00018	195	02270-01014	174	03320-00180	187
02010-00030	121	02110-00024	48	02270-01014	180	03320-00180	195
02010-10004	62	02110-00024	49	02270-01014	187	03320-00180	195
02010-10004	63	02110-00028	51	02270-01014	195	03320-00240	135
02010-10004	63	02110-00030	51	02270-04035	50	03320-00240	187
02010-10004	63	02110-00037	60	02270-04040	50	03320-00240	195
02010-10004	64	02110-00047	44	02360-05019	43	03320-00290	135
02010-20010	186	02110-00062	91	02432-01008	158	03320-00340	186

PARTS NUMBER INDEX

Part No.	Fig.No.	Part No.	Fig.No.	Part No.	Fig.No.	Part No.	Fig.No.
03320-00340	194	04710-04160	174	04901-00160	64	04914-00016	180
03350-00450	90	04710-04160	174	04901-00191	62	04914-00016	195
03350-00450	92	04710-04160	180	04901-00191	63	04914-00019	118
04012-00404	46	04710-04160	180	04901-00191	64	04914-00019	187
04134-00404	195	04710-04160	180	04911-00018	174	06001-45012	78
04134-20404	150	04710-04165	174	04911-00018	174	06001-50008	84
04134-20404	195	04710-04165	174	04911-00018	180	06001-50008	85
04138-00303	30	04710-04165	180	04911-00018	180	06001-65010	70
04150-20202	108	04710-04165	180	04911-00018	195	06001-65010	70
04601-44230	195	04710-04175	174	04911-00018	195	06001-65010	71
04601-44255	195	04710-04175	180	04911-00018	195	06001-65010	72
04601-44280	195	04710-04180	174	04911-00020	151	06001-65010	72
04601-44309	195	04710-04180	180	04911-00020	152	06001-65010	80
04601-44329	195	04710-04190	174	04911-00020	153	06001-65010	80
04601-44353	195	04710-04190	174	04911-00021	150	06002-45012	78
04601-44361	195	04710-04190	180	04911-00021	151	06002-65010	70
04601-44397	195	04710-04190	180	04911-00021	152	06002-65010	72
04601-44440	195	04710-04195	174	04911-00021	153	06005-50008	84
04601-44483	195	04710-04195	180	04911-00021	174	06005-50008	85
04601-44516	195	04710-04205	174	04911-00021	174	06005-65010	70
04691-02065	150	04710-04205	174	04911-00021	180	06005-65010	71
04691-04042	150	04710-04205	180	04911-00021	180	06005-65010	72
04691-04045	150	04710-04205	180	04911-00021	195	06005-65010	80
04691-04066	195	04710-04215	174	04911-00021	195	06005-65010	80
04691-04092	150	04710-04215	174	04911-00022	30	06006-50008	82
04691-04105	150	04710-04215	174	04911-00022	46	06006-50008	83
04710-04005	118	04710-04215	174	04911-00023	155	06006-50008	84
04710-04050	150	04710-04215	180	04911-00044	150	06006-50008	85
04710-04075	174	04710-04215	180	04911-00046	5	06006-65010	67
04710-04075	180	04710-04215	180	04911-00046	150	06006-65010	67
04710-04085	174	04710-04215	180	04911-00060	3	06006-65010	68
04710-04085	180	04710-04230	174	04911-00060	8	06006-65010	69
04710-04100	174	04710-04230	180	04911-00065	3	06006-65010	69
04710-04100	180	04710-04235	174	04911-00090	4	06006-65010	70
04710-04105	150	04710-04235	180	04913-10100	12	06006-65010	70
04710-04110	174	04710-04245	174	04913-10100	13	06006-65010	71
04710-04110	174	04710-04245	180	04913-10200	12	06006-65010	72
04710-04110	174	04710-04260	174	04913-10200	13	06006-65010	72
04710-04110	180	04710-04260	174	04913-10200	36	06006-65010	80
04710-04110	180	04710-04260	180	04913-10200	151	06006-65010	80
04710-04110	180	04710-04260	180	04913-10200	153	06007-45012	78
04710-04110	195	04710-04270	174	04913-11100	12	06007-50008	84
04710-04125	174	04710-04270	180	04913-11100	13	06007-50008	85
04710-04125	180	04710-04285	174	04913-11120	23	06007-65010	70
04710-04130	174	04710-04285	174	04913-11200	12	06007-65010	71
04710-04130	180	04710-04285	180	04913-11200	13	06007-65010	72
04710-04135	174	04710-04285	180	04913-11200	30	06007-65010	80
04710-04135	180	04710-04315	174	04913-11200	58	06007-65010	80
04710-04140	151	04710-04315	180	04913-11200	59	06009-65010	67
04710-04140	153	04710-04340	174	04913-11200	60	06009-65010	69
04710-04140	174	04710-04340	180	04913-11200	108	06009-65010	70
04710-04140	174	04901-00100	42	04913-11200	109	06009-65010	72
04710-04140	180	04901-00100	156	04913-11200	110	06701-45012	78
04710-04140	180	04901-00100	172	04913-11380	100	06701-50008	82
04710-04150	174	04901-00100	178	04913-11380	152	06701-50008	83
04710-04150	180	04901-00100	184	04913-20380	155	06701-50008	84
04710-04155	152	04901-00100	191	04913-21380	174	06701-50008	85
04710-04155	174	04901-00160	42	04913-21380	180	06701-65010	67
04710-04155	180	04901-00160	62	04913-21380	195	06701-65010	67
04710-04160	174	04901-00160	63	04914-00016	174	06701-65010	68

PARTS NUMBER INDEX

Part No.	Fig.No.	Part No.	Fig.No.	Part No.	Fig.No.	Part No.	Fig.No.
06701-65010	69	06841-45012	79	09001-08083	173	11243-82091	49
06701-65010	69	06841-50008	86	09001-08083	179	11243-82101	49
06701-65010	70	06841-65010	73	09001-08083	185	11243-82141	49
06701-65010	70	06841-65010	74	09001-08083	194	11243-82161	49
06701-65010	70	06841-65010	81	09001-08085	173	11243-82171	49
06701-65010	71	06841-65010	81	09001-08085	173	11243-82181	49
06701-65010	72	06843-45012	79	09001-08085	179	11243-82201	49
06701-65010	72	06843-50008	86	09001-08085	179	11243-82211	49
06701-65010	72	06843-65010	73	09001-08085	193	11243-82501	46
06701-65010	80	06843-65010	74	09001-08085	194	11243-82531	50
06701-65010	80	06843-65010	81	09001-08089	185	11243-82621	48
06702-65010	67	06843-65010	81	09001-08093	173	113A3-12001	42
06702-65010	69	06851-45012	79	09001-08093	179	114A3-10501	42
06702-65010	70	06851-50008	86	09001-08093	185	114A3-12012	42
06702-65010	72	06853-65010	73	09001-08093	193	115G3-82141	50
06711-45012	78	06853-65010	74	09001-08093	194	115G3-82491	51
06711-50008	82	06853-65010	81	09001-08097	173	115G3-82512	51
06711-50008	83	06853-65010	81	09001-08097	179	115G3-82522	51
06711-50008	84	09001-08043	185	09001-08099	185	116A3-49811	43
06711-50008	85	09001-08047	185	09001-08101	194	116A3-49811	44
06711-65010	67	09001-08051	173	09001-08103	173	116G2-50001	41
06711-65010	67	09001-08051	179	09001-08103	179	116G2-50041	41
06711-65010	68	09001-08051	193	09001-08103	185	116G2-50201	41
06711-65010	69	09001-08053	185	09001-08103	193	116G2-50401	41
06711-65010	69	09001-08055	173	09001-08107	173	116G3-22001	43
06711-65010	70	09001-08055	179	09001-08107	179	116G3-22001	48
06711-65010	70	09001-08055	185	09001-08109	193	116G3-42201	44
06711-65010	70	09001-08057	185	09001-08109	194	116G3-42211	44
06711-65010	71	09001-08057	193	09001-08113	173	116H3-80231	48
06711-65010	72	09001-08059	194	09001-08113	179	116H3-82101	46
06711-65010	72	09001-08061	173	09001-08115	185	116H3-82101	50
06711-65010	72	09001-08061	179	09001-08117	194	116H3-82201	50
06711-65010	80	09001-08061	185	09001-08123	173	116H3-82201	51
06711-65010	80	09001-08061	193	09001-08123	179	116W3-40201	43
06712-65010	67	09001-08065	173	09001-08125	185	118H3-80301	47
06712-65010	69	09001-08065	173	09001-08133	173	118H3-80401	51
06712-65010	70	09001-08065	179	09001-08133	179	118H3-80501	49
06712-65010	72	09001-08065	179	09192-30035	172	118H3-80511	49
06731-00070	78	09001-08065	194	09192-30035	172	118H3-82001	46
06731-00120	80	09001-08067	185	09192-30035	178	118H3-82021	46
06802-50008	86	09001-08067	185	09192-30035	178	118H3-82201	51
06802-50008	86	09001-08067	193	09192-30035	184	118H3-82211	51
06802-50008	86	09001-08069	194	09192-30035	191	118H3-82221	51
06802-65010	73	09001-08071	173	09192-30035	191	118H3-82231	51
06805-50008	87	09001-08071	179	10113-40161	44	118H3-89801	51
06805-50008	87	09001-08071	185	10113-40171	44	118H3-89801	51
06805-65010	74	09001-08071	193	10113-40521	44	118K3-80351	50
06805-65010	81	09001-08075	173	10113-40541	44	118K3-82301	50
06805-65010	81	09001-08075	179	10113-50112	53	118K3-82311	50
06806-45012	79	09001-08075	185	10193-50032	53	118K3-82331	50
06806-50008	86	09001-08075	185	110F3-40302	43	118K3-82351	46
06806-50008	86	09001-08075	194	110F3-52001	53	119H3-80201	46
06806-50008	86	09001-08077	173	110F3-52011	53	119H3-82011	46
06806-50008	87	09001-08077	179	110G3-82001	49	119K2-50002	45
06806-50008	87	09001-08077	185	11153-40041	44	120A3-10301	42
06806-65010	73	09001-08077	193	11193-50011	53	12003-12021	42
06806-65010	74	09001-08079	193	11243-80221	49	12003-22011	52
06806-65010	75	09001-08079	194	11243-82051	49	12003-22041	52
06806-65010	81	09001-08081	173	11243-82061	49	12003-22051	52
06806-65010	81	09001-08081	179	11243-82081	49	12003-42021	43

PARTS NUMBER INDEX

Part No.	Fig.No.	Part No.	Fig.No.	Part No.	Fig.No.	Part No.	Fig.No.
210F0-93301	189	210F8-10602	188	211F0-50311	185	211F0-51881	186
210F0-93311	189	210F8-10612	181	211F0-50321	185	211F0-62301	187
210F0-93331	189	210F8-42631	186	211F0-50331	185	211F0-70302	191
210F0-93341	189	210F8-43031	174	211F0-50331	193	211F0-70312	191
210F2-42011	21	210F8-43031	180	211F0-50341	185	211F0-70322	191
210F2-42021	21	210F8-43031	187	211F0-50351	185	211F0-70332	191
210F2-42031	21	210H8-10532	169	211F0-50351	193	211F0-70342	191
210F2-42201	21	210H8-10532	175	211F0-50361	185	211F0-70352	191
210F2-42211	21	210H8-10532	181	211F0-50371	185	211F0-70362	191
210F2-42221	21	210H8-10532	188	211F0-50371	193	211F0-70372	191
210F2-42231	21	210H8-10542	169	211F0-50381	185	211F0-70382	191
210F3-72001	55	210H8-10542	175	211F0-50381	193	211F0-70392	191
210F6-12441	116	210H8-10542	181	211F0-50391	185	211F0-70402	191
210F6-12441	172	210H8-10542	188	211F0-50401	185	211F0-80161	193
210F6-12441	178	210H8-10552	169	211F0-50411	185	211F0-80171	193
210F6-12441	184	210H8-10552	175	211F0-50411	193	211F0-80181	193
210F6-12441	191	210H8-10552	181	211F0-50421	185	211F0-80191	193
210F8-02102	172	210H8-10552	188	211F0-50431	185	211F0-80201	193
210F8-02102	178	210H8-10612	169	211F0-50441	185	211F0-80361	193
210F8-02102	184	210H8-10612	175	211F0-50451	185	211F0-80371	193
210F8-02102	191	210H8-10612	188	211F0-50461	185	211F0-80381	193
210F8-10502	169	210H8-10622	169	211F0-50471	185	211F0-80391	193
210F8-10502	175	210H8-10622	175	211F0-50481	185	211F0-80401	193
210F8-10502	181	210H8-10622	181	211F0-51501	186	211F0-82551	185
210F8-10502	188	210H8-10622	188	211F0-51511	186	211F0-82551	193
210F8-10512	169	210H8-10632	169	211F0-51521	186	211F0-93001	195
210F8-10512	169	210H8-10632	175	211F0-51531	186	211F8-22201	170
210F8-10512	169	210H8-10632	181	211F0-51541	186	211F8-22201	176
210F8-10512	175	210H8-10632	188	211F0-51551	186	211F8-22201	182
210F8-10512	175	210H8-10642	169	211F0-51561	186	211F8-22201	189
210F8-10512	175	210H8-10642	175	211F0-51571	186	211F8-22211	170
210F8-10512	181	210H8-10642	181	211F0-51581	186	211F8-22211	176
210F8-10512	181	210H8-10642	188	211F0-51591	186	211F8-22211	182
210F8-10512	181	211F0-50101	185	211F0-51601	186	211F8-22211	189
210F8-10512	188	211F0-50101	193	211F0-51611	186	211F8-22221	172
210F8-10512	188	211F0-50111	185	211F0-51621	186	211F8-22221	178
210F8-10512	188	211F0-50121	185	211F0-51631	186	211F8-22221	178
210F8-10522	169	211F0-50131	185	211F0-51641	186	211F8-22221	184
210F8-10522	175	211F0-50131	193	211F0-51651	186	211F8-22221	184
210F8-10522	181	211F0-50141	185	211F0-51661	186	211F8-22221	191
210F8-10522	188	211F0-50151	185	211F0-51671	186	211F8-22221	191
210F8-10532	169	211F0-50151	193	211F0-51681	186	211F8-22221	191
210F8-10532	175	211F0-50161	185	211F0-51701	186	211F8-22231	172
210F8-10532	181	211F0-50171	185	211F0-51711	186	211F8-22231	178
210F8-10532	188	211F0-50171	193	211F0-51721	186	211F8-22231	178
210F8-10572	169	211F0-50181	185	211F0-51731	186	211F8-22231	184
210F8-10572	175	211F0-50181	193	211F0-51741	186	211F8-22231	184
210F8-10572	181	211F0-50191	185	211F0-51751	186	211F8-22231	191
210F8-10572	188	211F0-50201	185	211F0-51761	186	211F8-22231	191
210F8-10582	169	211F0-50211	185	211F0-51771	186	211F8-22231	191
210F8-10582	175	211F0-50211	193	211F0-51781	186	211F8-22261	170
210F8-10582	181	211F0-50221	185	211F0-51791	186	211F8-22261	170
210F8-10582	188	211F0-50231	185	211F0-51801	186	211F8-22261	172
210F8-10592	169	211F0-50241	185	211F0-51811	186	211F8-22261	172
210F8-10592	175	211F0-50251	185	211F0-51821	186	211F8-22261	172
210F8-10592	181	211F0-50261	185	211F0-51831	186	211F8-22261	176
210F8-10592	188	211F0-50271	185	211F0-51841	186	211F8-22261	176
210F8-10602	169	211F0-50281	185	211F0-51851	186	211F8-22261	178
210F8-10602	175	211F0-50301	185	211F0-51861	186	211F8-22261	178
210F8-10602	181	211F0-50301	193	211F0-51871	186	211F8-22261	178

PARTS NUMBER INDEX

Part No.	Fig.No.	Part No.	Fig.No.	Part No.	Fig.No.	Part No.	Fig.No.
216G0-50701	186	216G0-80562	194	216G2-43221	11	216G2-43651	14
216G0-50711	186	216G0-80572	194	216G2-43231	11	216G2-43711	14
216G0-50721	186	216G0-80582	194	216G2-43241	11	216G3-02001	54
216G0-50731	186	216G0-80592	194	216G2-43251	11	216G3-02051	54
216G0-50741	186	216G0-80602	194	216G2-43261	11	216G3-02061	54
216G0-50751	186	216G0-80702	194	216G2-43271	11	216G4-12091	12
216G0-50761	186	216G0-80712	194	216G2-43281	11	216G4-12091	13
216G0-50771	186	216G0-80722	194	216G2-43291	11	216G4-12101	56
216G0-50781	186	216G0-80732	194	216G2-43301	11	216G4-12101	57
216G0-50801	186	216G0-80742	194	216G2-43401	14	216G4-12111	56
216G0-50811	186	216G0-80752	194	216G2-43411	14	216G4-12111	57
216G0-50821	186	216G0-80762	194	216G2-43421	14	216G4-12151	57
216G0-50831	186	216G0-80772	194	216G2-43502	21	216G4-12161	57
216G0-50841	186	216G0-80782	194	216G2-43502	24	216G4-12171	57
216G0-50851	186	216G0-80792	194	216G2-43502	25	216G4-12251	60
216G0-50861	186	216G0-80802	194	216G2-43502	26	216G4-12251	172
216G0-50871	186	216G0-81301	194	216G2-43531	21	216G4-12251	178
216G0-50881	186	216G0-81311	194	216G2-43531	24	216G4-12601	56
216G0-50901	186	216G0-81321	194	216G2-43531	25	216G4-12601	57
216G0-50911	186	216G0-81331	194	216G2-43531	26	216G4-12611	56
216G0-50921	186	216G0-81341	194	216G2-43542	21	216G4-12611	57
216G0-50931	186	216G0-81351	194	216G2-43542	24	216G4-12621	56
216G0-50941	186	216G0-81361	194	216G2-43542	25	216G4-12621	57
216G0-50951	186	216G0-81381	194	216G2-43542	26	216G4-12631	56
216G0-50961	186	216G0-81391	194	216G2-43551	21	216G4-12631	57
216G0-50971	186	216G0-81401	194	216G2-43551	24	216G4-12641	56
216G0-50981	186	216G0-89821	194	216G2-43551	25	216G4-12641	57
216G0-53011	186	216G0-93101	195	216G2-43551	26	216G4-12661	56
216G0-53051	186	216G0-93151	195	216G2-43562	21	216G4-12661	57
216G0-53061	186	216G0-93201	174	216G2-43562	24	216G4-12681	56
216G0-59801	186	216G0-93201	180	216G2-43562	25	216G4-12681	57
216G0-80103	194	216G0-93201	187	216G2-43562	26	216G4-12711	56
216G0-80113	194	216G0-93201	195	216G2-43571	21	216G4-12711	57
216G0-80123	194	216G0-93211	174	216G2-43571	24	216G4-12741	56
216G0-80133	194	216G0-93211	180	216G2-43571	25	216G4-12741	57
216G0-80144	194	216G1-02111	1	216G2-43571	26	216G4-12751	56
216G0-80154	194	216G1-02451	2	216G2-43582	21	216G4-12751	57
216G0-80164	194	216G1-02461	2	216G2-43582	24	216G4-12761	56
216G0-80173	194	216G1-02471	2	216G2-43582	25	216G4-12761	57
216G0-80174	194	216G1-02481	2	216G2-43582	26	216G4-30201	62
216G0-80184	194	216G1-02491	2	216G2-43592	21	216G4-30201	64
216G0-80194	194	216G1-02501	2	216G2-43592	24	216G4-50401	90
216G0-80204	194	216G2-22051	8	216G2-43592	25	216G4-50401	92
216G0-80303	194	216G2-22202	117	216G2-43592	26	216G4-52041	93
216G0-80313	194	216G2-22211	8	216G2-43602	21	216G4-52051	93
216G0-80323	194	216G2-40602	21	216G2-43602	24	216G4-52071	90
216G0-80333	194	216G2-40602	24	216G2-43602	25	216G4-52071	92
216G0-80344	194	216G2-40602	25	216G2-43602	26	216G4-52101	90
216G0-80354	194	216G2-40602	26	216G2-43611	21	216G4-52101	92
216G0-80364	194	216G2-40701	21	216G2-43611	24	216G5-22081	109
216G0-80374	194	216G2-40711	21	216G2-43611	25	216G5-22101	103
216G0-80384	194	216G2-40721	21	216G2-43611	26	216G5-32201	107
216G0-80394	194	216G2-40731	21	216G2-43622	21	216G5-32311	107
216G0-80404	194	216G2-42131	12	216G2-43622	24	216G5-32321	107
216G0-80502	194	216G2-42131	13	216G2-43622	25	216G5-32331	107
216G0-80512	194	216G2-42311	14	216G2-43622	26	216G5-32341	107
216G0-80522	194	216G2-42321	14	216G2-43631	21	216G5-42011	107
216G0-80532	194	216G2-43111	15	216G2-43631	24	216G6-32101	120
216G0-80542	194	216G2-43161	11	216G2-43631	25	216G6-42451	123
216G0-80552	194	216G2-43201	11	216G2-43631	26	216G6-42481	123

PARTS NUMBER INDEX

Part No.	Fig.No.	Part No.	Fig.No.	Part No.	Fig.No.	Part No.	Fig.No.
216K8-10321	188	218E8-30281	172	218G0-70581	191	218G8-30261	172
216K8-10331	175	218E8-30281	178	218G0-70591	191	218G8-30261	178
216K8-10331	181	218G0-40201	184	218G0-70601	191	218G8-30271	172
216K8-10331	188	218G0-40211	184	218G0-90101	189	218G8-30271	178
216K8-10341	175	218G0-40221	184	218G1-02101	3	218G8-30291	172
216K8-10341	181	218G0-40231	184	218G2-22001	8	218G8-30291	178
216K8-10341	188	218G0-40241	184	218G2-22051	8	218G8-30301	172
216K8-10351	175	218G0-40251	184	218G2-42001	14	218G8-30301	178
216K8-10351	181	218G0-40261	184	218G2-52002	41	218G8-30311	172
216K8-10351	188	218G0-40271	184	218G2-52062	41	218G8-30311	178
216K8-10361	175	218G0-40281	184	218G4-22001	61	218G8-30321	172
216K8-10361	181	218G0-40291	184	218G4-22001	61	218G8-30321	178
216K8-10361	188	218G0-40301	184	218G5-10111	97	218G8-30331	172
216K8-10371	175	218G0-40311	184	218G5-10121	97	218G8-30331	178
216K8-10371	181	218G0-40321	184	218G5-10341	96	218G8-30341	172
216K8-10371	188	218G0-40331	184	218G5-10341	96	218G8-30341	178
216K8-10381	175	218G0-40341	184	218G5-10351	96	218G8-30351	172
216K8-10381	181	218G0-40351	184	218G5-10351	96	218G8-30351	178
216K8-10381	188	218G0-40361	184	218G5-42601	110	218G8-30361	172
216K8-10391	175	218G0-40371	184	218G5-42601	111	218G8-30361	178
216K8-10391	181	218G0-40381	184	218G5-42601	112	218G8-30371	172
216K8-10391	188	218G0-40401	184	218G5-42621	110	218G8-30371	178
216K8-10401	175	218G0-40411	184	218G5-42621	111	218G8-30381	172
216K8-10401	181	218G0-40421	184	218G5-42621	112	218G8-30381	178
216K8-10401	188	218G0-40431	184	218G6-40301	124	218G8-30401	172
216K8-10411	175	218G0-40441	184	218G6-40501	123	218G8-30401	178
216K8-10411	181	218G0-40451	184	218G6-40521	123	218G8-30411	172
216K8-10411	188	218G0-40461	184	218G6-42201	122	218G8-30411	178
216K8-10421	175	218G0-40471	184	218G6-42211	122	218G8-30421	172
216K8-10421	181	218G0-40481	184	218G6-42291	124	218G8-30421	178
216K8-10421	188	218G0-40491	184	218G6-42302	124	218G8-30431	172
216K8-10431	175	218G0-40501	184	218G6-42391	124	218G8-30431	178
216K8-10431	181	218G0-40511	184	218G6-42451	123	218G8-30441	172
216K8-10431	188	218G0-40521	184	218G6-42471	123	218G8-30441	178
216K8-10441	175	218G0-40531	184	218G6-42641	123	218G8-30451	172
216K8-10441	181	218G0-40541	184	218G6-49801	122	218G8-30451	178
216K8-10441	188	218G0-40551	184	218G7-30521	139	218G8-30461	172
216M7-62101	144	218G0-40561	184	218G7-60301	151	218G8-30461	178
217G2-32001	9	218G0-40571	184	218G7-60301	153	218G8-30471	172
217G2-40301	11	218G0-40581	184	218G7-60311	151	218G8-30471	178
217G2-42021	15	218G0-60101	182	218G7-60311	153	218G8-30481	172
217G2-42051	15	218G0-70101	191	218G7-62061	154	218G8-30481	178
217G2-42151	15	218G0-70111	191	218G7-62071	154	218G8-30491	172
217U9-12002	158	218G0-70121	191	218G7-62081	151	218G8-30491	178
217Y9-12001	158	218G0-70131	191	218G7-62081	153	218G8-30501	172
217Y9-12011	158	218G0-70141	191	218G7-62261	151	218G8-30501	178
218B9-12001	158	218G0-70151	191	218G7-62261	153	218G8-30511	172
218B9-12011	158	218G0-70161	191	218G8-20001	170	218G8-30511	178
218B9-19801	158	218G0-70171	191	218G8-30201	172	218G8-30521	172
218B9-19801	159	218G0-70181	191	218G8-30201	178	218G8-30521	178
218B9-19811	158	218G0-70191	191	218G8-30211	172	218G8-30531	172
218B9-19811	158	218G0-70201	191	218G8-30211	178	218G8-30531	178
218B9-19811	158	218G0-70501	191	218G8-30221	172	218G8-30541	172
218B9-19811	158	218G0-70511	191	218G8-30221	178	218G8-30541	178
218B9-19811	158	218G0-70521	191	218G8-30231	172	218G8-30551	172
218B9-19811	160	218G0-70531	191	218G8-30231	178	218G8-30551	178
218B9-19811	161	218G0-70541	191	218G8-30241	172	218G8-30561	172
218B9-19811	162	218G0-70551	191	218G8-30241	178	218G8-30561	178
218B9-19811	163	218G0-70561	191	218G8-30251	172	218G8-30571	172
218B9-19811	164	218G0-70571	191	218G8-30251	178	218G8-30571	178

PARTS NUMBER INDEX

Part No.	Fig.No.	Part No.	Fig.No.	Part No.	Fig.No.	Part No.	Fig.No.
224W7-62701	91	22717-40061	147	231A8-12011	169	234A8-43501	194
225R6-32001	121	22717-40061	148	231A8-12011	175	234B7-82101	155
225R9-12001	160	22717-40081	173	231A8-12011	181	234B7-82111	155
225R9-12031	160	22717-40081	179	231A8-12011	188	234H5-30201	108
225R9-12052	160	22717-40081	194	231A8-12021	169	234H5-32401	108
225R9-12071	160	22777-60301	144	231A8-12021	175	234H5-32411	108
225R9-12081	160	22777-60301	150	231A8-12021	181	234H5-32421	108
225R9-12091	160	228U7-62221	155	231A8-12021	188	234H5-32431	108
225R9-12101	121	229F0-91001	135	231A8-12031	169	234H5-32441	108
225R9-12112	160	229F0-91001	187	231A8-12031	175	234H7-60301	150
22513-02051	54	229F0-91001	195	231A8-12031	181	23452-42181	15
22517-40051	145	229F0-94001	187	231A8-12031	188	23453-02071	54
22517-40051	146	229F0-94101	195	232W9-12001	160	23453-02091	54
22517-40051	147	229F2-22071	119	232W9-12011	160	23453-02131	54
22517-40051	148	229F2-22151	117	232W9-12021	160	23453-79801	55
22517-40051	173	229F2-22161	117	232W9-12051	158	23455-42021	110
22517-40051	179	229F2-22171	119	232W9-12101	160	23455-42021	111
22517-40051	194	229F2-42141	96	232W9-12111	160	23455-42021	112
22518-40121	185	229F2-42141	167	23200-50811	186	23456-42181	107
22518-40121	193	229F2-42161	40	23200-50841	186	23456-42181	108
22574-32062	62	229F2-42421	11	23232-42072	18	23456-42181	123
22574-32062	62	229F2-42421	11	23232-42072	19	23457-42041	146
22574-32062	63	229F2-42431	11	23235-40091	113	23457-42041	147
22574-32062	64	229F6-42201	12	23302-42311	24	23457-60301	60
22574-32062	64	229F6-42201	13	23302-42311	25	23457-60311	60
22574-32102	62	229F6-42201	127	23302-42311	26	23458-52031	65
22574-32102	63	229F6-42201	127	234A0-50601	186	23460-73121	91
22574-32102	64	229F6-42201	127	234A0-50801	186	235C2-40301	14
22574-40202	70	229F6-42201	127	234A0-52611	186	23647-40041	145
22574-40202	70	229F6-42201	127	234A0-62101	187	23647-40121	109
22574-40303	67	229F6-42201	129	234A1-02071	1	23648-50161	186
22574-40303	70	229F6-42201	129	234A2-12201	5	23650-52861	194
22574-40303	73	229F6-42201	130	234A2-12211	5	23651-02001	1
22574-40303	76	229F6-42211	127	234A2-42301	20	23651-02011	1
22578-32841	170	229F6-42211	127	234A6-42042	125	23652-12051	6
22578-32841	170	229F6-42211	127	234A6-42072	125	23652-12051	9
22578-32841	176	229F6-42211	127	234A6-43121	124	23652-44001	34
22578-32841	176	229F6-42211	129	234A7-40052	148	23653-02001	54
22578-32841	182	229F6-42211	129	234A7-42011	148	23654-32041	62
22578-32841	189	22959-12052	160	234A8-02201	195	23654-32041	63
22580-53311	194	22959-12052	162	234A8-42561	186	23654-32041	64
22580-53321	186	230C1-02041	97	234A8-42561	186	23654-34051	66
22580-53321	194	230C1-02041	98	234A8-42561	194	23654-34051	66
22655-42591	108	230C1-02041	125	234A8-42571	172	23655-22101	123
22655-42591	109	230C2-42201	19	234A8-42571	173	23657-42131	146
22672-42501	24	230C5-55021	115	234A8-42571	178	23657-60311	150
22672-42501	25	230C5-55031	115	234A8-42571	179	23658-52051	186
22672-42501	26	230C5-55041	115	234A8-42571	184	23658-52061	186
22678-52021	186	230C5-55051	115	234A8-42571	186	23658-52101	156
22679-12102	168	230C5-55061	115	234A8-42571	186	23658-52101	156
22679-43831	186	230C5-55071	115	234A8-42571	191	23658-52401	156
22679-47301	24	230C5-55081	115	234A8-42571	194	23658-52401	156
22679-47301	25	230C5-55101	115	234A8-42611	174	23659-12101	158
22679-47301	26	230C5-55111	115	234A8-42611	180	23659-42161	171
22679-47301	27	230C5-55121	115	234A8-42611	187	23659-42161	177
22679-47301	38	23007-62061	50	234A8-42611	195	23659-42161	183
22679-47301	39	231A8-12001	169	234A8-42621	174	23659-42161	190
22679-47301	98	231A8-12001	175	234A8-42621	180	23678-06002	172
22717-40061	145	231A8-12001	181	234A8-43051	174	23678-06002	178
22717-40061	146	231A8-12001	188	234A8-43051	180	23678-06002	184

PARTS NUMBER INDEX

Part No.	Fig.No.	Part No.	Fig.No.	Part No.	Fig.No.	Part No.	Fig.No.
239H5-40411	105	242F6-82151	132	24234-32231	63	25594-52271	90
239H5-42301	108	242F6-82151	133	24234-32231	63	25594-52271	92
239H5-42371	108	242F6-82161	132	24234-32231	63	25594-52281	90
239H5-42451	108	242F6-82161	133	24234-32231	64	25594-52281	92
239H7-52001	117	242F6-82171	132	24234-32231	64	25594-52362	90
23917-42191	186	242F6-82171	133	24234-32231	64	25594-52362	92
241G1-00101	1	242F6-82181	132	24234-32241	62	25594-52371	90
241G1-02001	3	242F6-82181	133	24234-32241	63	25594-52371	92
241G1-02101	1	242F6-82191	132	24234-32241	64	25594-52381	90
241G1-02201	1	242F6-82191	133	24234-32271	62	25594-52381	92
241G2-12001	5	242F6-82201	133	24234-32271	64	25594-52391	90
241G2-12011	5	242F6-82211	133	24234-32411	62	25594-52391	92
241G2-12101	5	242F6-82221	133	24234-32411	63	25594-52401	90
241G2-22031	8	242F6-82231	133	24234-32411	64	25594-52401	92
241G2-22151	8	242F6-82241	132	24234-32421	62	25594-52411	90
241G2-22201	8	242F6-82241	133	24234-32421	64	25594-52411	92
241G2-22211	8	242F6-82251	133	24234-32501	65	25594-52431	93
241G2-30101	9	242F6-82261	132	24234-39803	62	25594-59802	90
241G2-32001	9	242F6-82261	133	24234-39803	63	25594-59802	91
241G2-42001	18	242F6-82271	133	24234-39803	64	25594-59802	92
241G2-42101	14	242F6-82281	133	24234-39813	62	25595-42311	107
241G2-42121	18	242F6-82291	132	24234-39813	64	25595-42311	114
241G2-42121	19	242F6-82291	133	24234-40201	84	25595-42381	114
241G5-22001	103	242F6-82301	133	24236-12572	65	25595-42391	114
241G7-10201	135	242F6-82311	133	24236-12581	65	25595-42411	114
241G7-12001	135	242F6-82321	133	24237-60411	144	25595-42421	114
241G7-62001	150	242F6-82331	133	24237-62341	144	25595-42452	107
241H2-42001	19	24230-82211	185	24239-22001	165	25595-42452	107
24154-40101	67	24230-82211	193	24274-40201	71	25595-42491	107
24154-40101	70	24230-82221	185	24274-40501	68	25595-42491	108
242F6-80101	133	24230-82221	193	24274-40501	71	25595-42491	109
242F6-80201	132	24230-82231	185	24274-40501	74	25596-42361	22
242F6-82001	132	24230-82231	193	24274-40501	77	25596-42361	22
242F6-82001	133	24230-82291	185	24329-46201	174	25596-42361	23
242F6-82011	132	24230-82291	193	24329-46201	180	25596-42361	123
242F6-82011	133	24234-30551	61	24352-42521	14	25596-42361	123
242F6-82021	132	24234-30551	61	24389-46021	185	25596-42361	123
242F6-82021	133	24234-30551	62	24389-46021	193	25597-62211	58
242F6-82031	132	24234-30551	63	24453-02061	54	25597-62211	59
242F6-82031	133	24234-30551	64	24459-42921	174	256A2-12031	6
242F6-82041	132	24234-30551	90	24459-42921	180	256A2-12041	6
242F6-82041	133	24234-30551	92	24459-42921	187	256A2-42171	15
242F6-82051	132	24234-30561	62	24459-42951	174	256C1-08011	2
242F6-82051	133	24234-30561	64	24459-42951	180	256C5-12671	122
242F6-82061	132	24234-30561	90	24459-42951	187	256C7-42281	108
242F6-82061	133	24234-30561	92	24459-42951	195	25784-52342	91
242F6-82071	132	24234-32123	62	24469-42701	91	25785-43091	107
242F6-82071	133	24234-32123	64	24662-22131	8	25789-12051	159
242F6-82081	132	24234-32131	62	24662-22141	8	25790-94021	195
242F6-82081	133	24234-32131	64	24843-02011	54	25808-42481	185
242F6-82091	132	24234-32182	62	24843-02062	54	25808-42481	193
242F6-82091	133	24234-32182	63	24868-42111	186	25908-44101	185
242F6-82101	132	24234-32182	64	24868-42111	186	25908-44101	193
242F6-82101	133	24234-32221	62	24868-42111	194	25908-44111	185
242F6-82111	132	24234-32221	63	25414-40201	70	25908-44111	193
242F6-82111	133	24234-32221	64	25592-42081	15	25958-52201	91
242F6-82121	132	24234-32231	62	25592-42121	119	25958-52211	91
242F6-82121	133	24234-32231	62	25592-52002	54	25958-52221	91
242F6-82131	133	24234-32231	62	25594-52141	58	26062-42881	14
242F6-82141	133	24234-32231	63	25594-52141	59	26062-42881	24

PARTS NUMBER INDEX

Part No.	Fig.No.	Part No.	Fig.No.	Part No.	Fig.No.	Part No.	Fig.No.
514A2-72411	149	516G0-60101	2	516G3-82061	164	516G6-85001	88
514A2-82012	160	516G0-62011	2	516G3-82071	164	516G6-85011	76
514A3-02002	162	516G1-32002	20	516G3-82101	162	516G6-85011	77
514A3-04201	194	516G1-32012	20	516G3-82111	160	516G6-90401	128
514A3-04221	194	516G1-42021	128	516G3-82111	162	516G6-92001	35
514A3-72091	21	516G1-42021	129	516G3-82121	160	516G6-92011	35
514A3-82002	160	516G1-42021	130	516G3-82121	162	516G6-92022	35
514A3-82002	161	516G1-42101	24	516G3-82131	162	516G6-92031	35
514A3-82002	162	516G1-42101	26	516G3-82141	162	516G6-92121	35
514A3-82002	163	516G1-42101	31	516G3-82151	162	516G6-92151	35
514A3-82002	164	516G1-42111	24	516G3-82161	162	516G6-92201	35
514A3-82012	160	516G1-42111	25	516G3-82171	162	516G6-92211	35
514A3-82012	162	516G1-42111	25	516G3-82181	164	516G7-50101	33
514A3-82022	160	516G1-42111	26	516G3-82191	164	516G7-50201	129
514A3-82022	162	516G1-42121	26	516G3-82201	162	516G7-50211	130
514A3-82032	162	516G1-42151	24	516G3-82211	160	516G7-50301	33
514A3-82042	162	516G1-42151	25	516G3-82211	162	516G7-50401	128
514A3-82052	162	516G1-42151	26	516G3-82221	160	516G7-52011	54
514A3-82062	162	516G1-42211	27	516G3-82221	162	516G8-92001	27
514A3-82072	162	516G1-42211	31	516G3-82232	162	516G9-10101	28
514A3-82301	158	516G1-42251	127	516G3-82241	162	516G9-12011	28
514A3-82301	189	516G1-42251	127	516G3-82251	162	516G9-92101	23
514A3-82321	158	516G1-42251	127	516G3-82261	162	516K6-80171	77
514A3-82321	189	516G1-42251	127	516G3-82271	162	516M5-12301	102
514A3-82331	158	516G1-64301	183	516G3-82281	164	516M5-12301	102
514A3-82331	189	516G1-64301	190	516G3-82291	164	516M5-12311	102
514A3-82341	158	516G1-64351	183	516G3-82801	160	516M5-12311	102
514A3-82341	189	516G1-64351	190	516G3-82801	161	516M5-12311	102
514A3-82351	158	516G2-40451	60	516G3-82801	162	517G6-20101	11
514A3-82351	189	516G2-72701	160	516G3-82801	163	517G6-20201	11
514A3-82361	158	516G2-72701	161	516G3-82801	164	517H3-82221	5
514A3-82361	189	516G2-72701	162	516G3-82811	162	517H8-80101	11
514A3-82371	158	516G2-72701	163	516G3-82821	160	518G0-82001	10
514A3-82371	189	516G2-72701	164	516G3-82821	162	518G0-90111	97
514A3-82381	158	516G2-72711	160	516G3-82831	160	518G0-90211	98
514A3-82381	189	516G2-72711	161	516G3-82831	162	518G1-61301	182
514A3-82391	158	516G2-72711	162	516G3-82841	162	518G1-61401	182
514A3-82391	189	516G2-72711	163	516G3-82851	162	518G1-61501	189
514A3-82611	82	516G2-72711	164	516G3-82861	162	518G1-61601	189
514A3-82611	84	516G2-74101	183	516G3-82871	162	518G2-32002	41
514A3-82611	86	516G2-74101	190	516G3-82881	162	518G2-32042	41
514A3-82611	88	516G2-74201	183	516G3-82891	164	518G2-60201	96
514A5-12011	96	516G2-74201	190	516G3-82901	164	518G2-60211	96
514A5-12011	96	516G2-74301	183	516G4-60202	136	518G2-80101	98
514A5-12011	97	516G2-74301	190	516G4-60302	137	518G2-80121	98
514A5-12011	97	516G2-82051	160	516G4-60402	138	518G2-80121	98
514A5-12011	98	516G2-82061	160	516G5-12511	102	518G2-80151	96
514A5-12011	124	516G3-70011	62	516G5-12511	102	518G2-80161	96
514A5-12021	102	516G3-70011	64	516G5-13051	96	518G2-80171	96
514A5-12701	57	516G3-70021	62	516G5-13151	96	518G2-80181	96
514A5-12701	122	516G3-70021	64	516G5-13511	102	518G2-80231	95
514A5-32341	31	516G3-74001	173	516G5-13511	102	518G2-82181	160
514A5-42031	167	516G3-74001	179	516G6-12051	32	518G2-82181	161
514A5-42051	167	516G3-82001	162	516G6-22011	40	518G2-82181	162
514A5-42141	166	516G3-82011	160	516G6-22031	11	518G2-82181	163
514T2-72061	98	516G3-82011	162	516G6-22031	11	518G2-82181	164
514T7-20201	29	516G3-82021	162	516G6-22051	11	518G2-82281	160
514T7-22061	29	516G3-82031	162	516G6-22051	11	518G3-70202	131
516B6-80302	69	516G3-82041	162	516G6-80171	76	518G3-70212	131
516B6-80302	72	516G3-82051	162	516G6-80271	88	518G3-72301	131

PARTS NUMBER INDEX

Part No.	Fig.No.	Part No.	Fig.No.	Part No.	Fig.No.	Part No.	Fig.No.
534A4-22101	100	535H3-82431	162	539A2-80301	95	539A9-02011	28
534A5-00401	102	535H3-82441	162	539A2-80371	98	539A9-32001	102
534A5-00411	102	535H3-82451	162	539A2-80501	95	539A9-62001	168
534A5-00411	102	535H3-82461	162	539A2-80571	98	539A9-92001	14
534A5-12321	101	535H3-82471	162	539A2-82251	98	539A9-92101	22
534A5-12331	101	535H3-82481	162	539A2-90201	94	539A9-92201	123
534A5-12571	102	535H3-82491	162	539A2-90301	95	539B2-32201	17
534A5-42201	167	535H3-82501	164	539A2-90401	95	539B3-72151	17
534A6-42201	134	535H3-82511	164	539A3-72151	16	539B3-72201	17
534A6-42211	134	536A5-40002	166	539A5-00111	97	539B3-82301	17
534A6-42221	134	536A5-40102	166	539A5-00121	97	539B6-92211	35
534A6-42231	134	536A5-42052	166	539A5-00351	97	539C0-90051	98
534A6-42241	134	53651-12551	2	539A5-00361	97	539C0-90061	98
534A6-42251	134	53652-82011	160	539A5-00371	97	539G3-72001	117
534A6-42261	134	53652-82011	162	539A5-00381	97	54023-72081	66
534A6-42271	134	53652-82352	160	539A5-00401	94	541G0-80101	9
534A6-42281	134	53652-82352	162	539A5-00601	94	541G0-80201	9
534A6-42291	134	53652-82401	160	539A5-00701	94	541G0-80301	9
534A6-42301	134	53652-82401	162	539A5-10501	102	541G1-70101	9
534A6-42311	134	53652-82541	160	539A5-12001	102	541G1-70201	9
534A6-42321	134	53652-82551	160	539A5-12001	102	541G3-72001	18
534A6-42331	134	53658-43001	186	539A5-12011	99	541G6-52001	5
534A6-42341	134	53658-43001	194	539A5-12041	99	541H3-72001	19
534A6-42351	134	53658-43011	186	539A5-12101	101	542F3-80101	133
534A6-42361	134	53658-43011	194	539A5-32091	131	542F3-80201	132
534A6-42371	134	53658-43021	186	539A5-40002	166	542F3-82001	132
534A6-42381	134	53658-43021	194	539A5-40102	166	542F3-82001	133
534A6-42391	134	53658-43031	186	539A5-42052	166	542F3-82011	132
534A6-42401	134	53658-43031	194	539A6-22001	40	542F3-82011	133
534A6-42411	134	53658-43041	186	539A6-22011	40	542F3-82021	132
534A6-42421	134	53658-43041	194	539A6-22021	15	542F3-82021	133
534A6-42431	134	53671-92821	166	539A6-22111	6	54236-80101	72
534A6-42441	134	53675-54101	174	539A6-42111	123	54236-80101	72
534A6-42451	134	53675-54101	180	539A7-22301	30	54236-80121	75
534A6-42472	134	53675-55051	150	539A7-22513	29	54236-80131	72
534A6-42482	134	53675-55051	174	539A7-22611	29	54236-80141	69
534A7-02001	15	53675-55051	180	539A7-52001	37	54236-80141	69
534A7-22101	29	537A0-80302	10	539A7-52001	38	54236-80141	72
534A7-50301	36	538G2-60202	106	539A7-52001	39	54236-80141	72
534A7-50401	36	538G3-82201	15	539A7-52031	37	54236-80151	72
534A7-50501	36	538S3-72001	117	539A7-52031	38	54236-80181	69
534A7-50601	37	539A0-82201	9	539A7-52031	39	54236-80181	72
534A7-50601	38	539A1-32001	101	539A7-52041	36	54236-80181	72
534A7-50601	39	539A1-42201	24	539A7-52101	38	54236-80181	75
534A7-52301	36	539A1-42201	25	539A7-52101	39	54236-80201	79
534A7-52401	36	539A1-42201	26	539A7-52311	36	54236-80251	78
534A7-52501	36	539A2-42001	60	539A7-52411	36	54236-80301	80
534A7-72001	14	539A2-42011	60	539A7-52511	36	54236-80311	80
534A9-22001	100	539A2-60111	98	539A7-72001	12	54236-80501	81
534A9-22011	100	539A2-60221	98	539A7-72001	13	54236-80511	81
534A9-22101	100	539A2-60231	95	539A8-22101	31	54236-80601	80
534A9-22211	21	539A2-60301	57	539A8-22151	31	54236-80611	80
534A9-22301	100	539A2-60601	122	539A8-92111	24	54236-80701	80
534A9-92131	23	539A2-62301	57	539A8-92111	25	54236-80711	80
534B6-42001	134	539A2-62321	57	539A8-92111	26	54236-80801	80
535C2-60401	123	539A2-72121	15	539A8-92111	27	54236-80811	80
535H3-82261	115	539A2-80111	98	539A8-92251	27	54236-81001	80
535H3-82411	162	539A2-80151	98	539A8-92251	38	54236-81001	81
535H3-82411	164	539A2-80161	98	539A8-92251	39	54236-81011	80
535H3-82421	162	539A2-80221	98	539A9-02001	28	54236-81011	81

発行

TCM株式会社

本　社　大阪市西区京町堀1－15－10

発 行　　TCMテクノ株式会社

F.Y.2004

TCM CORPORATION

AL MARKETING DIVISION :　1-15-5, Nishi－shimbashi, Minato－ku, Tokyo
105－0003, Japan
FAX : Japan +81－3－35918152, 3－35918153

SA－0402001(H)　Printed in Japan

TCM株式会社